A PRACTICAL GUIDE TO COMPRESSOR TECHNOLOGY

ABOUT THE AUTHOR

Heinz P. Bloch is an internationally respected authority in all areas of machinery operations, troubleshooting, and repair. He was with the Exxon Corporation for over 20 years, and is now the principal of Process Machinery Co. Mr. Bloch is also the author or coauthor of 15 other books, including *Improving Machinery Reliability, Machinery Failure Analysis, Machinery Component Maintenance and Repair*, *Major Process Equipment Maintenance*, and *Compressors and Applications*, as well as more than 330 articles or technical papers.

A PRACTICAL GUIDE TO COMPRESSOR TECHNOLOGY

Second Edition

HEINZ P. BLOCH
Process Machinery Consulting
West Des Moines, Iowa

WILEY-
INTERSCIENCE

A JOHN WILEY & SONS, INC., PUBLICATION

Copyright © 2006 by John Wiley & Sons, Inc. All rights reserved.

Published by John Wiley & Sons, Inc., Hoboken, New Jersey.
Published simultaneously in Canada.

No part of this publication may be reproduced, stored in a retrieval system, or transmitted in any form or by any means, electronic, mechanical, photocopying, recording, scanning, or otherwise, except as permitted under Section 107 or 108 of the 1976 United States Copyright Act, without either the prior written permission of the Publisher, or authorization through payment of the appropriate per-copy fee to the Copyright Clearance Center, Inc., 222 Rosewood Drive, Danvers, MA 01923, (978) 750-8400, fax (978) 750-4470, or on the web at www.copyright.com. Requests to the Publisher for permission should be addressed to the Permissions Department, John Wiley & Sons, Inc., 111 River Street, Hoboken, NJ 07030, (201) 748-6011, fax (201) 748-6008, or online at http://www.wiley.com/go/permission.

Limit of Liability/Disclaimer of Warranty: While the publisher and author have used their best efforts in preparing this book, they make no representations or warranties with respect to the accuracy or completeness of the contents of this book and specifically disclaim any implied warranties of merchantability or fitness for a particular purpose. No warranty may be created or extended by sales representatives or written sales materials. The advice and strategies contained herein may not be suitable for your situation. You should consult with a professional where appropriate. Neither the publisher nor author shall be liable for any loss of profit or any other commercial damages, including but not limited to special, incidental, consequential, or other damages.

For general information on our other products and services or for technical support, please contact our Customer Care Department within the United States at (800) 762-2974, outside the United States at (317) 572-3993 or fax (317) 572-4002.

Wiley also publishes its books in a variety of electronic formats. Some content that appears in print may not be available in electronic formats. For more information about Wiley products, visit our web site at www.wiley.com.

Library of Congress Cataloging-in-Publication Data:

Bloch, Heinz P., 1933–
  A practical guide to compressor technology/Heinz P. Bloch.—2nd ed.
    p. cm.
  Includes bibliographical references and index.
  ISBN-13: 978-0-471-72793-4
  ISBN-10: 0-471-72793-8
  1. Compressors. I. Title.

  TJ990.B546 2006
  621.5′1—dc22
2005056951

Printed in the United States of America

10 9 8 7 6 5 4 3 2 1

CONTENTS

12 Design Considerations and Manufacturing Techniques 215

13 Advanced Sealing and Bearing Systems 299

PREFACE

Compressors are a vital link in the conversion of raw materials into refined products. Compressors also handle economical use and transformation of energy from one form into another. They are used for the extraction of metals and minerals in mining operations, for the conservation of energy in natural gas reinjection plants, for secondary recovery processes in oil fields, for the utilization of new energy sources such as shale oil and tar sands, for furnishing utility or reaction air, for oxygen and reaction gases in almost any process, for process chemical and petrochemical plants, and for the separation and liquefaction of gases in air separation plants and in LPG and LNG plants. And, as the reader will undoubtedly know, this listing does not even begin to describe the literally hundreds of services that use modern compression equipment.

The economy and feasibility of all these applications depend on the reliability of compressors and the capability of the compressors selected to handle a given gas at the desired capacity. It is well known that only turbocompressors made large process units such as ammonia plants, ethylene plants, and base-load LNG plants technically and economically feasible. Conversely, there are applications where only a judiciously designed positive displacement compressor will be feasible, or economical, or both. These compressors could take the form of piston-type reciprocating machines, helical screw machines intended for true oil-free operation, liquid-injected helical screw machines, or others. All, of course, demand performance of the highest reliability and availability. These two requirements form the cornerstone of the development programs under way at the design and manufacturing facilities of the world's leading equipment producers.

Today, the petrochemical and other industries are facing intense global competition, which in turn has created a need for lower-cost equipment. Making this equipment without compromising quality, efficiency, and reliability is not easy, and only the industrial world's best manufacturers measure up to the task. Equally important, only a contemplative, informed, and discerning equipment purchaser or equipment user can be expected to spot the right combination of these two desirable and seemingly contradictory requirements: low cost and high quality.

The starting point of machinery selection is machinery know-how. From know-how we can progress to type selection: reciprocating compressor vs. centrifugal compressor, dry vs. liquid-injected rotary screw compressor. Type selection leads to component selection: oil film seals vs. dry gas seals for centrifugal compressors. These could be exceedingly important considerations since both type selection and component selection will have a lasting impact on maintainability, surveillability, availability, and reliability of compressors and steam turbines. Without fail, the ultimate effect will be plant profitability or even plant survival.

This text, then, is intended to provide the kind of guidance that will make it easier for the reader to make an intelligent choice. Although I cannot claim it to be all-encompassing and complete in every detail, it is nevertheless intended to be both readable and relevant. I have brought this second edition text up to date in terms of practical, field-proven component configuration and execution of process compressors. The emphasis is on technology for two principal categories and their respective subgroups: positive displacement compressors and dynamic compression equipment such as centrifugal and axial turbomachines. New material deals with compressor specification, testing, reliability verification, asset management, and related subjects.

With experience showing machinery downtime events being linked to the malfunction of auxiliaries and support equipment, I decided to include surge suppression, lubrication and sealing systems, couplings, and other relevant auxiliaries. All of these are thoroughly cross-referenced in the index and should be helpful to a wide spectrum of readers.

While compiling this information from commercially available industry source materials, I was struck by the profusion of diligent effort that some manufacturers have expended to design and manufacture more efficient, more reliable machinery. With much of this source material dispersed among the various sales, marketing, design, and manufacturing groups, I set out to collect the data and organize it into a book that first acquaints the reader with the topic by using overview and summary-type materials. The information progresses through more detailed and somewhat more design-oriented write-ups toward scoping studies and application and selection examples. Some of these are shown in both English and metric units; others were left in the method chosen by the original contributor.

The reader will note that I stayed away from an excessively mathematical treatment of the subject at hand. Instead, the focus was clearly on giving a single-source reference on all that will be needed by the widest possible spectrum of machinery users, ranging from plant operators to mechanical technical support technicians, reliability engineers, mechanical and chemical engineers, operations superintendents, project managers, and senior plant administrators.

The publishers and I wish to point out that the book would never have been written without the full cooperation of a large number of highly competent equipment manufacturers in the United States and overseas. It was compiled by obtaining permission to use the direct contributions of companies and individuals listed in the acknowledgments. These contributions were then structured into a cohesive survey of what the reader should know about compressor technology in the year 2006. The real credit should therefore go to the various contributors, not to the coordinating or compiling editor. In line with this thought, I would be most pleased if the entire effort would serve to acquaint the reader not only with the topic, but also with the names of the outstanding individuals and companies whose contributions made it all possible.

HEINZ P. BLOCH

West Des Moines, Iowa

ACKNOWLEDGMENTS

We gratefully acknowledge the cooperation and, in many cases, intense special effort of the companies and individuals whose contributions to this book made the entire endeavor possible in the first place. Others have been timely, diligent, and kind to both review this material and secure permission for its incorporation in the book.

Our special thanks go to A-C Compressor Corporation, Appleton, Wis.; Aerzen USA Company and Pierre Noack, Coatesville, Pa.; Anglo Compression, Inc., Mount Vernon, Ohio; The American Society of Mechanical Engineers, New York, N. Y.; Bently-Nevada Corporation, Minden, Nev.; BHS-Voith Getriebewerke, Sonthofen, Germany; Burckhardt Compression AG, Winterthur, Switzerland; Cooper Industries, Mount Vernon, Ohio; Compressor Controls Corporation and Dr. B. W. Batson, Des Moines, Iowa; Coupling Corporation of America, Jacobus, Pa.; John Crane Company and Joe Delrahim, Morton Grove, Ill.; Demag Delaval Turbomachinery and Ken Reich, Gary Walker, and Roy Salisbury, Trenton, N.J.; Dresser Industries, Inc., Roots Division, Connersville, Ind.; Dresser-Rand Company, Engine Process Compressor Division and Ron Beyer, G. A. Lentek, Martin Hinchliff, and Dick Schaad, Painted Post, N.Y.; Dresser-Rand Turbo Products and Harvey Galloway, Russ Svendsen, and Art Wemmell, Olean, N.Y.; Elliott Company and Ross A. Hackel, Don Hallock, and Ken Peters, Jeannette, Pa.; Flexelement Texas, Houston, Tex., and Michael Saunders; Flexibox, Inc., Houston, Tex.; Imo Industries (now Mannesmann-Demag-DeLaval), Trenton, N.J.; Indikon/Metravib Instruments, Cambridge, Mass.; King Tool Company and Dale Sweeney, Longview, Tex.; Bearings Plus, Inc., and Dr. Fouad Zeidan, Houston, Tex.; Lincoln Division of McNeil Corporation, St. Louis, Mo.; Lubrication Systems Company, Houston, Tex.; Lubriquip, Inc., Cleveland, Ohio; Lucas Aerospace Company, Bendix Fluid Power Division, Utica, N.Y.; Nash Engineering Company, Norwalk, Conn.; M. T. Gresh of Flexware, Inc., Jeannette, Pa.; Nuovo Pignone, Florence, Italy; Pressure Products Industries Division, The Duriron Company, Warminster, Pa.; Pressurized Bearing Co. and Donald Bently and Carlo Luri, Minden, Nev.; Prognost Systems and Thorsten Bickmann and Eike Drewes, Rheine, Germany; Revolve Technologies and Paul Eakins, T. J. Al-Himyary, and Stan Uptigrove, Calgary, Alberta, Canada; Rotordynamics-Seal Research, North Highlands, CA; Sermatech, Pottstown, Pa.; Shiraz Pradhan, Pradhan Core Engineering, Baytown, Tex.; Sulzer-Burckhardt Engineering Works, Ltd., Winterthur, Switzerland; Sulzer Turbosystems International and Bernhard Haberthuer and Chris Rufer, New York, N.Y.; Torquetronics, Alleghany, N.Y.; and Zurn Industries, Erie, Pa.

Also, many thanks to the individual contributors: Mike Calistrat (Section 14.1); R. Chow, B. McMordie, and R. Wiegand (Section 12.2.1), Arvind Godse (Section 19.4), Claude Matile (we decided his contribution of Chapter 5 is a stand-alone classic that should remain unchanged), and John Mitchell (Section 21.2).

PART I

POSITIVE DISPLACEMENT COMPRESSOR TECHNOLOGY

Positive displacement compressors comprise the first of the two principal compressor categories, the second being dynamic compressors. In all positive displacement machines, a certain inlet volume of gas is confined in a given space and subsequently compressed by reducing this confined space or volume. At this now elevated pressure, the gas is next expelled into the discharge piping or vessel system.

Although positive displacement compressors include a wide spectrum of configurations and geometries, the most important process machines are piston-equipped reciprocating compressors and helical screw rotating machines. Although there are a number of others, including diaphragm and sliding vane compressors, the overwhelming majority of significant process gas-positive displacement machines are clearly reciprocating piston and twin helical screw-rotating or rotary screw machines. For that reason, this book focuses on their operating characteristics and application ranges. Figure I.1 identifies these application ranges and allows us to compare typical flow and pressure fields for other compressor types as well.

A1	reciprocating compressors with lubricated and nonlubricated cylinders
A2	reciprocating compressors for high and very high pressures with lubricated cylinders
B	helical- or spiral-lobe compressors (rotary screw compressors) with dry or oil-flooded rotors
C	liquid ring compressors (also used as vacuum pumps)
D	two-impeller straight-lobe rotary compressors, oil-free (also used as vacuum pumps)
E	centrifugal turbocompressors
F	axial turbocompressors
G	diaphragm compressors

A Practical Guide to Compressor Technology, Second Edition, By Heinz P. Bloch

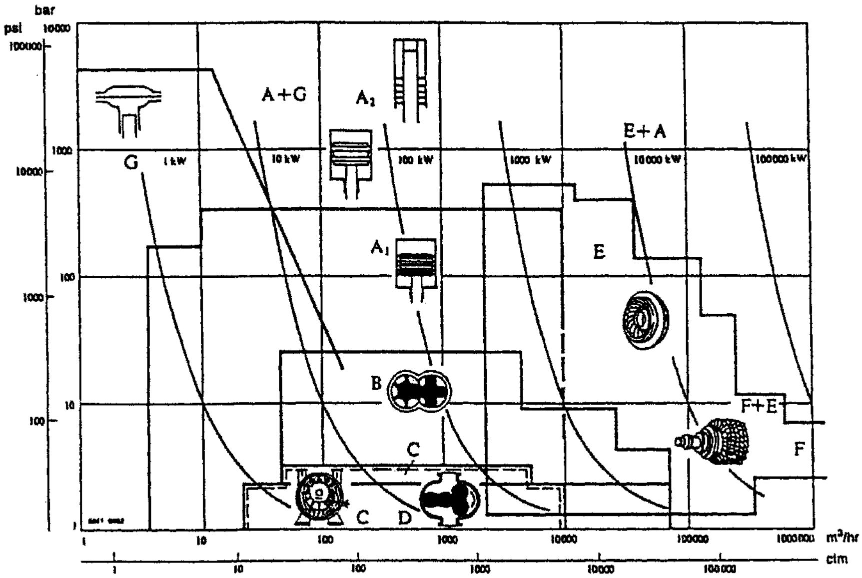

FIGURE I.1 Application ranges for various types of compressors. *(Sulzer-Burckhardt, Winterthur and Basel, Switzerland)*

The most frequently used combinations of two different compressor types are identified in three fields:

A + G	oil-free reciprocating compressor followed by a diaphragm compressor
E + A	centrifugal turbocompressor followed by an oil-free reciprocating compressor
F + E	axial turbocompressor followed by a centrifugal turbocompressor

1

THEORY*

This discussion of thermodynamics is limited to the processes that are involved in the compression of gases in a positive displacement compressor of the reciprocating type. A *positive displacement compressor* is a machine that increases the pressure of a definite initial volume of gas, accomplishing the pressure increase by volume reduction. Only with a knowledge of basic laws and their application can one understand what is happening in a compressor and thus properly solve any compression problem.

The definitions and units of measurement given at the end of this chapter should either be known to the reader or be reviewed thoroughly before beginning.

1.1 SYMBOLS

The following symbols (based on pounds, feet, seconds, and degrees Fahrenheit) are used in this discussion of positive displacement compressor theory:

c	cylinder clearance, % or decimal
c_p	specific heat-constant pressure, Btu/°F-lb
c_v	specific heat-constant volume, Btu/°F-lb
CE	compression efficiency, %
k	ratio of specific heats, dimensionless
M	molecular weight (MW), dimensionless
ME	mechanical efficiency, %
N	number of moles, dimensionless

---

* Developed and contributed by Dresser-Rand Company, Olean, N.Y. Based on Ingersoll-Rand Form 3519-D.

A Practical Guide to Compressor Technology, Second Edition, By Heinz P. Bloch

$N_{a,b,c}$	moles of constituents, dimensionless
p	pressure, psia
$p_{a,b,c}$	partial pressure of constituents, psia
p_a	partial air pressure, psia
p_c	critical pressure (gas property), psia
p_r	reduced pressure, dimensionless
p_s	saturated vapor pressure, psia or in. Hg
p_v	partial vapor pressure, psia or in. Hg
psia	lb/in^2 absolute, psi
psig	lb/in^2 gauge, psi
P_t	theoretical horsepower, (work rate), hp
Q	heat, Btu
r	ratio of compression per stage, dimensionless
r_t	ratio of compression—total, dimensionless
R_0	universal or molar gas constant, ft-lb/mol-°R (1545 when p is in lb/ft^2)
R'	specific gas constant, ft-lb/lb-°R
RH	relative humidity, %
s	number of stages of compression, dimensionless
S	entropy, Btu/lb-°F
SH	specific humidity, lb moisture/lb dry gas
SPT	standard pressure and temperature, 14.696 psia and 60°F
T	absolute temperature, °R
T_c	critical temperature, °R
T_r	reduced temperature, dimensionless
v	specific volume, ft^3/lb
$v_{a,b,c}$	partial volume of constituents, ft^3/lb
v_r	pseudo-specific reduced volume, ft^3/lb
V	total volume, ft^3
VE	volumetric efficiency, %
W	weight, lb
W_a	weight of dry air in a mixture, lb
W_v	weight of vapor in a mixture, lb
$W_{a,b,c}$	weight of constituents in a mixture, lb
Z	compressibility factor, dimensionless
η_v	volumetric efficiency, %

1.2 HOW A COMPRESSOR WORKS

Every compressor is made up of one or more *basic elements.* A single element, or a group of elements in parallel, comprises a *single-stage* compressor. Many compression problems involve conditions beyond the practical capability of a single compression stage. Too great a *compression ratio* (absolute discharge pressure divided by absolute intake pressure) causes excessive discharge temperature and other design problems. It therefore may become necessary to combine elements or groups of elements in series to form a *multistage unit*, in which there will be two or more steps of compression. The gas is frequently cooled between stages to reduce the temperature and volume entering the following stage.

Note that each stage is an individual basic compressor within itself. It is sized to operate in series with one or more additional basic compressors, and even though they may all operate from one power source, each is still a separate compressor.

The basic reciprocating compression element is a single cylinder compressing on only one side of the piston (*single-acting*). A unit compressing on both sides of the piston (*double-acting*) consists of two basic single-acting elements operating in parallel in one casting.

The reciprocating compressor uses automatic spring-loaded valves that open only when the proper differential pressure exists across the valve. Inlet valves open when the pressure in the cylinder is slightly below the intake pressure. Discharge valves open when the pressure in the cylinder is slightly above the discharge pressure.

Figure 1.1 shows the basic element with the cylinder full of a gas, say, atmospheric air. On the theoretical *p–V* diagram (indicator card), point 1 is the start of compression. Both valves are closed.

Figure 1.2 shows the compression stroke, the piston having moved to the left, reducing the original volume of air with an accompanying rise in pressure. Valves remain closed. The *p–V* diagram shows compression from point 1 to point 2, and the pressure inside the cylinder has reached that in the receiver.

Figure 1.3 shows the piston completing the delivery stroke. The discharge valves opened just beyond point 2. Compressed air is flowing out through the discharge valves to the receiver. After the piston reaches point 3, the discharge valves will close, leaving the clearance space filled with air at discharge pressure.

During the expansion stroke (Fig. 1.4) both the inlet and discharge valves remain closed, and air trapped in the clearance space increases in volume, causing a reduction in pressure. This continues as the piston moves to the right, until the cylinder pressure drops below the inlet pressure at point 4.

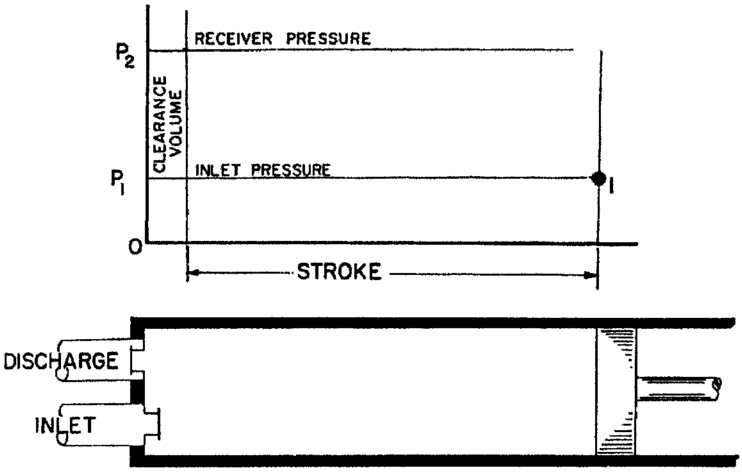

FIGURE 1.1 Basic compressor element with the cylinder full of gas. On the theoretical *p–V* diagram (indicator card), point 1 is the start of compression. Both valves are closed. *(Dresser-Rand Company, Painted Post, N.Y.)*

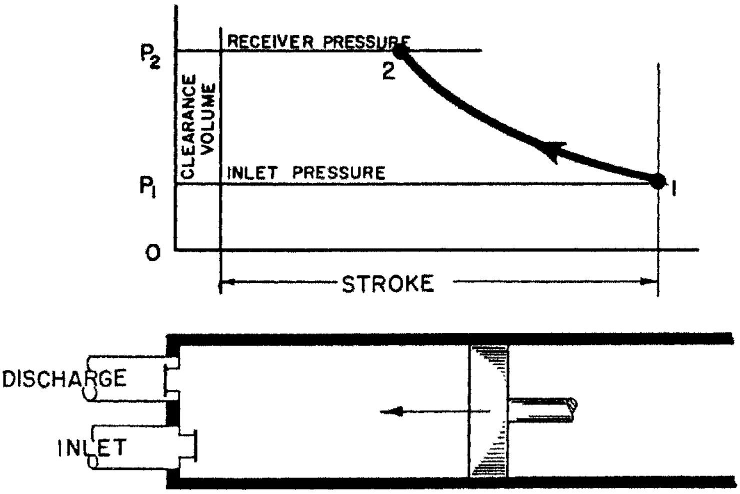

FIGURE 1.2 Compression stroke. The piston has moved to the left, reducing the original volume of gas with an accompanying rise in pressure. Valves remain closed. The *p–V* diagram shows compression from point 1 to point 2 and the pressure inside the cylinder has reached that in the receiver. *(Dresser-Rand Company, Painted Post, N.Y.)*

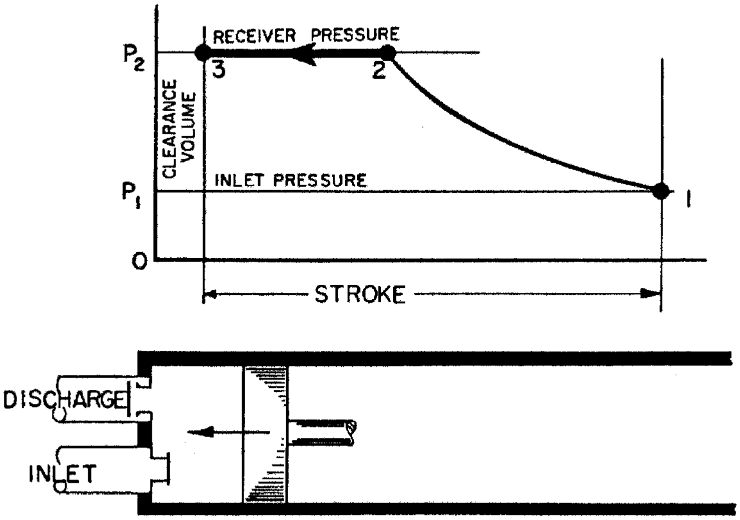

FIGURE 1.3 The piston is shown completing the delivery stroke. The discharge valves opened just beyond point 2. Compressed air is flowing out through the discharge valves to the receiver. *(Dresser-Rand Company, Painted Post, N.Y.)*

The inlet valves will now open, and air will flow into the cylinder until the end of the reverse stroke at point 1. This is the intake or suction stroke, illustrated by Fig. 1.5. At point 1 on the *p–V* diagram, the inlet valves will close and the cycle will repeat on the next revolution of the crank.

In an elemental two-stage reciprocating compressor the cylinders are proportioned according to the total compression ratio, the second stage being smaller because the gas,

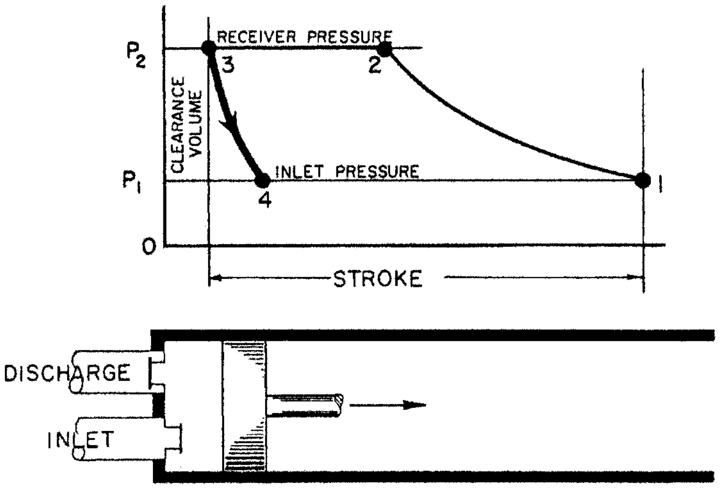

FIGURE 1.4 During the expansion stroke shown, both the inlet and discharge valves remain closed and gas trapped in the clearance space increases in volume, causing a reduction in pressure. *(Dresser-Rand Company, Painted Post, N.Y.)*

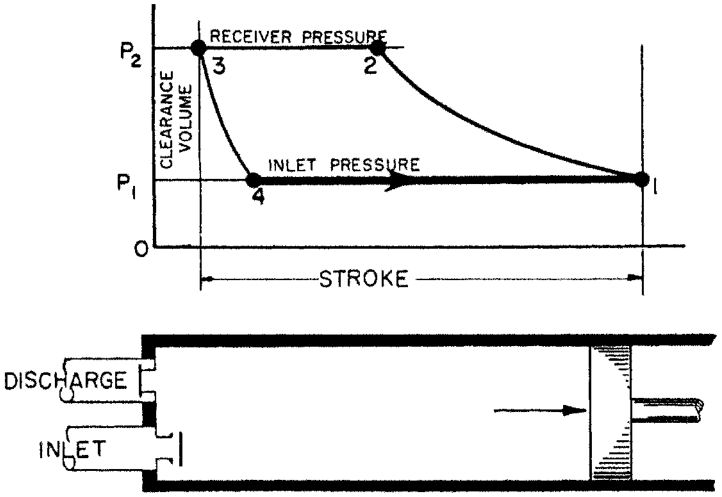

FIGURE 1.5 At point 4, the inlet valves will open and gas will flow into the cylinder until the end of the reverse stroke at point 1. *(Dresser-Rand Company, Painted Post, N.Y.)*

having already been partially compressed and cooled, occupies less volume than at the first-stage inlet. Looking at the *p–V* diagram (Fig. 1.6), the conditions before starting compression are points 1 and 5 for the first and second stages, respectively; after compression, conditions are points 2 and 6, and after delivery, points 3 and 7. Expansion of gas trapped in the clearance space as the piston reverses brings points 4 and 8, and on the intake stroke the cylinders are again filled at points 1 and 5 and the cycle is set for repetition. Multiple staging of any positive displacement compressor follows this pattern.

Certain laws that govern the changes of state of gases must be thoroughly understood. Symbols were listed in Section 1.1.

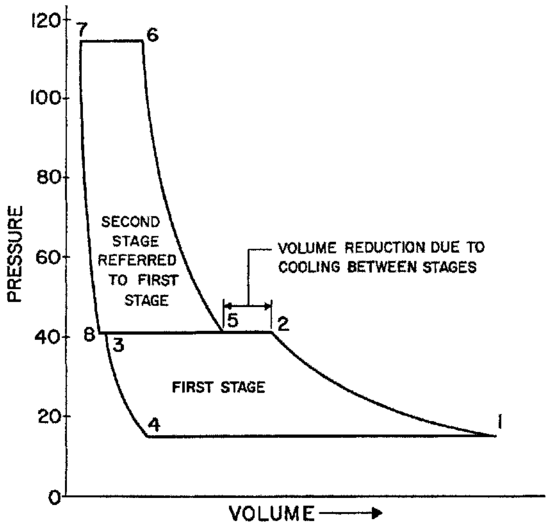

FIGURE 1.6 The p–V diagram for a two-stage compressor. *(Dresser-Rand Company, Painted Post, N.Y.)*

1.3 FIRST LAW OF THERMODYNAMICS

The first law of thermodynamics states that energy cannot be created or destroyed during a process (such as compression and delivery of a gas), although it may change from one form of energy to another. In other words, whenever a quantity of one kind of energy disappears, an exactly equivalent total of other kinds of energy must be produced.

1.4 SECOND LAW OF THERMODYNAMICS

The second law of thermodynamics is more abstract and can be stated in several ways.

1. Heat cannot, of itself, pass from a colder to a hotter body.
2. Heat can be made to go from a body at lower temperature to one at higher temperature *only* if external work is done.
3. The available energy of the isolated system decreases in all real processes.
4. Heat or energy (or water), of itself, will flow only downhill.

Basically, these statements say that energy exists at various levels and is *available for use* only if it can move from a higher to a lower level.

In thermodynamics a measure of the *unavailability* of energy has been devised and is known as *entropy.* It is defined by the differential equation

$$dS = d\frac{Q}{T} \tag{1.1}$$

Note that entropy (as a measure of unavailability) increases as a system loses heat but remains constant when there is no gain or loss of heat (as in an adiabatic process).

1.5 IDEAL OR PERFECT GAS LAWS

An ideal or perfect gas is one to which the laws of Boyle, Charles, and Amonton apply. There are no truly perfect gases, but these laws are used and corrected by compressibility factors based on experimental data.

1.5.1 Boyle's Law

At constant temperature the volume of an ideal gas varies inversely with the pressure. In symbols:

$$\frac{V_2}{V_1} = \frac{p_1}{p_2} \tag{1.2}$$

$$p_2V_2 = p_1V_1 = \text{constant} \tag{1.3}$$

This is the *isothermal law*.

1.5.2 Charles' Law

The volume of an ideal gas at constant pressure varies directly as the absolute temperature:

$$\frac{V_2}{V_1} = \frac{T_2}{T_1} \tag{1.4}$$

$$\frac{V_2}{T_2} = \frac{V_1}{T_1} = \text{constant} \tag{1.5}$$

1.5.3 Amonton's Law

At constant volume the pressure of an ideal gas will vary directly with the absolute temperature.

$$\frac{p_2}{p_1} = \frac{T_2}{T_1} \tag{1.6}$$

$$\frac{p_2}{T_2} = \frac{p_1}{T_1} = \text{constant} \tag{1.7}$$

1.5.4 Dalton's Law

Dalton's law states that the total pressure of a mixture of ideal gases is equal to the sum of the partial pressures of the constituent gases. The *partial pressure* is defined as the pressure each gas would exert if it alone occupied the volume of the mixture at the mixture temperature.

Dalton's law has been proven experimentally to be somewhat inaccurate, the total pressure often being higher than the sum of the partial pressures, particularly as pressures increase. However, for engineering purposes it is the best rule available and the error is minor. This can be expressed as follows, all pressures being at the same temperature and volume:

$$p = p_a + p_b + p_c + \cdots \tag{1.8}$$

1.5.5 Amagat's Law

Amagat's law is similar to Dalton's law but states that the volume of a mixture of ideal gases is equal to the sum of the partial volumes that the constituent gases would occupy if each existed alone at the *total* pressure and temperature of the mixture. As a formula this becomes

$$V = V_a + V_b + V_c + \cdots \tag{1.9}$$

Note: Dalton's and Amagat's laws are discussed further in Section 1.8.

1.5.6 Avogadro's Law

Avogadro's law states that equal volumes of all gases, under the same conditions of pressure and temperature, contain the same number of molecules. This law is very important and is applied in many compressor calculations. This is discussed further in Section 1.13.

1.5.7 Perfect Gas Formula

Starting with Charles' and Boyle's laws, it is possible to develop a formula for a given weight of gas:

$$pV = WR'T \tag{1.10}$$

where W is weight and R' is a specific constant for the gas involved. This is the perfect gas equation.

Going one step further, by making W in pounds equal to the molecular weight of the gas (1 mol), the formula becomes

$$pV = R_0T \tag{1.11}$$

This is very useful. R_0 is known as the *universal gas constant,* has a value of 1545, and is the same for all gases. Note, however, that R_0 is 1545 only when p is lb/ft^2; V is ft^3/lb-mol; and T is °R (°F + 460). When p is lb/in^2, R_0 becomes 10.729. The *specific gas constant* (R') for any gas can be obtained by dividing 1545 by the molecular weight.

1.6 VAPOR PRESSURE

As liquids change physically into a gas (as during a temperature rise), their molecules travel with greater velocity, and some break out of the liquid to form a vapor above the liquid. These molecules create a vapor pressure, which (at a specified temperature) is the only pressure at which a pure liquid and its vapor can exist in equilibrium.

If, in a closed liquid–vapor system, the volume is reduced at constant temperature, the pressure will increase imperceptibly until condensation of part of the vapor into liquid has lowered the pressure to the original vapor pressure corresponding to the temperature. Conversely, increasing the volume at constant temperature will reduce the pressure imperceptibly, and molecules will move from the liquid phase to the vapor phase until the original vapor pressure has been restored. Temperatures and vapor pressures for a given gas always move together.

The temperature corresponding to any given vapor pressure is obviously the *boiling point* of the liquid and also the *dew point* of the vapor. Addition of heat will cause the liquid to boil, and removal of heat will start condensation. The terms *saturation temperature, boiling point*, and *dew point* all mean the same physical temperature at a given vapor pressure. Their use depends on the context in which they appear.

Typical vapor pressure curves for common pure gases are shown in Appendix A. Tables of the properties of *saturated* steam show its temperature–vapor pressure relationship.

1.7 GAS AND VAPOR

By definition, a *gas* is a fluid having neither independent shape nor form, tending to expand indefinitely. A *vapor* is a gasified liquid or solid, a substance in gaseous form. These definitions are in general use today.

All *gases* can be liquefied under suitable pressure and temperature conditions and therefore could also be called *vapors*. The term *gas* is more generally used when conditions are such that a return to the liquid state (condensation) would be difficult within the scope of the operations being considered. However, a gas under such conditions is actually a superheated vapor.

The terms *gas* and *vapor* will be used rather interchangeably, with emphasis on closer approach to the liquid phase when using the word *vapor*.

1.8 PARTIAL PRESSURES

Vapor pressure created by one pure liquid will not affect the vapor pressure of a second pure liquid when the liquids are insoluble and nonreacting and the liquids and/or vapors are mixed within the same system. There is complete indifference on the part of each component to the existence of all others. The total vapor pressure for mixtures is the sum of the vapor pressures of the individual components. This is Dalton's law, and each individual vapor has what is called a *partial pressure*, as differentiated from the total pressure of the mixture.

During compression of any gas other than a pure and dry gas, the principles of partial pressure are at work. This is true even in normal 100-psig air compression for power purposes, because there is always some water vapor mixed with the intake air and the compressor must handle both components. Actually, air is itself a mixture of a number of components, including oxygen, nitrogen, and argon, and its total pressure is the sum of the partial pressures of each component. However, because of the negligible variation in the composition of *dry* air throughout the world, it is considered and will hereafter be treated as a single gas with specific properties of its own.

After compression, partial pressures are used to determine moisture condensation and removal in intercoolers and aftercoolers. Partial pressures are also involved in many vacuum pump applications and are encountered widely in the compression of many mixtures.

Dalton's and Amagat's laws have been defined in Sections 1.5.4 and 1.5.5. See Eqs. (1.8) and (1.9), which apply here. Since water vapor is by far the most prevalent constituent involved in partial pressure problems in compressing gases, it is usually the only one considered in subsequent discussions.

In a mixture, when the dew-point temperature of any component is reached, the space occupied is said to be *saturated* by that component. A volume is sometimes specified as being *partially saturated* with water vapor at a certain temperature. This means that the vapor is actually superheated and the dew point is lower than the actual temperature. If the moles (see Section 1.13) of each component are known, the partial pressure of the component in question can be determined. Otherwise, it is customary to multiply the vapor pressure of the component at the existing mixture temperature by the relative humidity to obtain the partial pressure.

The terms *saturated gas* or *partially saturated gas* are incorrect and give the wrong impression. It is *not* the gas that is saturated with vapor; it is the volume or space occupied. The vapor and gas exist independently throughout the volume or space. Understanding of this true concept is helpful when working with partial pressures and gas mixtures.

Relative humidity is a term frequently used to represent the quantity of moisture present in a mixture, although it uses partial pressures in so doing. It is expressed as follows:

$$\begin{aligned} \text{RH } (\%) &= \frac{\text{actual partial vapor pressure} \times 100}{\text{saturated vapor pressure at existing mixture temperature}} \\ &= \frac{p_v \times 100}{p_s} \end{aligned} \tag{1.12}$$

Relative humidity is usually considered only in connection with atmospheric air, but since it is unconcerned with the nature of any other components or the total mixture pressure, the term is applicable to vapor content in any problem, no matter what the conditions.

The saturated water vapor pressure at a given temperature is always known from steam tables or charts. It is the existing partial vapor pressure that is desired and is therefore calculable when the relative humidity is stated.

Specific humidity, used in calculations on certain types of compressors, is a totally different term. It is the ratio of the weight of water vapor to the weight of *dry* air and is usually expressed as pounds (or grains) of moisture per pound of dry air:

$$\text{SH} = \frac{W_v}{W_a} \tag{1.13}$$

or

$$\mathrm{SH} = \frac{0.622p_v}{p - p_v} = \frac{0.622p_v}{p_a} \tag{1.14}$$

where p_a is partial air pressure.

The *degree of saturation* denotes the actual relation between the weight of moisture existing in a space and the weight that would exist if the space were saturated:

$$\text{degree of saturation } (\%) = \frac{\text{SH actual} \times 100}{\text{SH saturated}} \tag{1.15}$$

$$= \mathrm{RH} \times \frac{p - p_s}{p - p_v} \tag{1.16}$$

Usually, p_s and p_v are quite small compared to p; therefore, the degree of saturation closely approximates the relative humidity. The latter term is commonly used in psychrometric work involving air–water vapor mixtures, whereas degree of saturation is applied mainly to gas–vapor mixtures having components other than air and water vapor.

The practical application of partial pressures in compression problems centers to a large degree around the determination of mixture volumes or weights to be handled at the intake of each stage of compression, the determination of mixture molecular weight, specific gravity, and the proportional or actual weight of components.

1.9 CRITICAL CONDITIONS

There is one temperature above which a gas will not liquefy with pressure increases no matter how great. This point is called the *critical temperature.* It is determined experimentally. The pressure required to compress and condense a gas at this critical temperature is called the *critical pressure.* The critical constants of many gases are given in Appendix A.

1.10 COMPRESSIBILITY

All gases deviate from the perfect or ideal gas laws to some degree, and in some cases the deviation is rather extreme. It is necessary that these deviations be taken into account in many compressor calculations to prevent cylinder volumes and driver sizes being sadly in error.

Compressibility is derived experimentally from data on the actual behavior of a particular gas under p–V–T changes. The compressibility factor Z is a multiplier in the basic formula. It becomes the ratio of the actual volume at a given p–T condition to the ideal volume at the same p–T condition.

The ideal gas equation (1.11) is therefore modified to

$$pV = ZR_0T \tag{1.17}$$

or

$$Z = \frac{pV}{R_0T} \tag{1.18}$$

In these equations, R_0 is 1545 and p is lb/ft^2.

A series of compressibility and temperature–entropy charts has been drafted to cover all gases on which reliable information could be found. These will be found in specialized texts or handbooks. In some cases, they represent consolidation and correlation of data from several sources, usually with a variance of less than 1% from the basic data. These charts may be considered authoritative.

Temperature–entropy charts are useful in the determination of theoretical discharge temperatures that are not always consistent with ideal gas laws. Discharge temperatures are required to obtain the compressibility factor at discharge conditions as involved in some calculations. These specific Z and T–S charts will provide the necessary correction factors for most compression problems involving the gases covered.

1.11 GENERALIZED COMPRESSIBILITY CHARTS

Because experimental data over complete ranges of temperature and pressure are not available for all gases, scientists have developed what are known as *generalized compressibility charts.* There are a number of these. One set has been selected as being suitable for screening calculations and is included in Appendix A.

These charts are based on what are called *reduced* conditions. Reduced pressure p_r is the ratio of the absolute pressure in lb/in^2 at a particular condition to the absolute critical pressure. Similarly, reduced temperature T_r is the ratio of the absolute temperature at the particular condition to the absolute critical temperature. The formulas are

$$p_r = \frac{p}{p_c} \tag{1.19}$$

$$T_r = \frac{T}{T_c} \tag{1.20}$$

It has been found that compressibility curves on the reduced basis for a large number of gases fall together with but small divergence. There are only a few gases that are too individualistic to be included.

Some charts show a reduced volume v_r' also, but this is really a pseudo (pretended)-reduced condition, obtained by use of the following formula (reduced volumes are not shown on the charts included here):

$$v_r' = \frac{vp_c}{R_0 T_c} \tag{1.21}$$

From this we can also write

$$v = \frac{v_r' R_0 T_c}{\mathrm{P}_c} \tag{1.22}$$

In these formulas, v and v_r' are the specific volumes of 1 mol of gas.

Critical pressures and temperatures for many gases are given in Appendix A.

1.12 GAS MIXTURES

Mixtures can be considered as equivalent ideal gases. Although this is not strictly true, it is satisfactory for the present purposes. Many mixtures handled by compressors contain from 2 to 10 separate components. It is necessary to determine as closely as possible many properties of these as *equivalent gases.* Chief among these properties are:

- Specific volume
- Density
- Volume and mole percent
- Molecular weight
- Specific gravity
- Partial pressure
- Ratio of specific heats (k)
- Pseudo-reduced pressure
- Pseudo-reduced temperature
- Compressibility
- Gas constant
- Specific heats

1.13 THE MOLE

The *mole* is particularly useful when working with gas mixtures. It is based on Avogadro's law: that equal volumes of gases at given pT conditions contain equal numbers of molecules. Since this is so, the *weight* of these equal volumes will be proportional to their molecular weights.

The volume of 1 mol at any desired condition can be found by the use of the perfect gas law:

$$pV = R_0T \qquad \text{or} \qquad pV = 1545T \tag{1.23}$$

Choosing standard pressure and temperature (SPT) conditions, we solve for V in the previous formula (p is lb/ft^2 and T is °R). This turns out to be 379.4 ft^3. For simplicity, use 379 ft^3/mol. To repeat, this is the volume of a weight (expressed in pounds) of any gas at 14.696 psia and 60°F—the weight being the same number as the molecular weight.

Thus, a mole of hydrogen occupies a volume of 379 ft^3 at standard conditions and weighs 2.016 lb. A mole of air occupies 379 ft^3 at the same conditions but weighs 28.97 lb. A mole of isobutane, still 379 ft^3, weighs 58.12 lb. This, of course, assumes that they act as perfect or ideal gases, which most of them do at or near standard conditions (SPT): 14.696 psia and 60°F. Most mole calculations involve these or similar conditions. Note, however, that a mole is a *weight* of gas. It is *not* a volume.

Despite the deviation from a perfect gas sometimes being in question, the following methods of obtaining mixture pseudo properties are of great value, and in some cases are the only approach.

1.14 SPECIFIC VOLUME AND DENSITY

Since the volume and the weight of a mole of any gas is known from the defined relations, it follows that the specific volume in ft^3/lb or density in lb/ft^3 is obtained by simple division.

Gas	Specific Volume (ft^3/mol)	lb/mol and Molecular Weight	Specific Volume (ft^3/lb)	Density (lb/ft^3)
Hydrogen	379	2.016	188.3	0.00531
Air	379	28.97	13.1	0.0763
Isobutane	379	58.12	6.51	0.153

Note that these data are on the basis of perfect gas laws. Some gases—isobutane is one—deviate even at SPT conditions. The actual figures on isobutane, for example, are 6.339 ft^3/lb and 0.1578 lb/ft^3.

1.15 VOLUME PERCENT OF CONSTITUENTS

Mole percent is the ratio of the number of moles of one constituent to the total number of moles of mixture. Mole percent also happens to be percent by volume. This statement should be questioned since a mole is defined as a weight. Look at the following table for proof. The gas analysis in these and following tables is that of a typical raw ammonia synthesis gas.

Gas	Mol %	Mol/mol of Mixture	Volume (SPT) of 1 mol	Volume/mol of Mixture	Vol %
H_2	61.4	0.614	379	232.7	61.4
N_2	19.7	0.197	379	74.7	19.7
CO_2	17.5	0.175	379	66.3	17.5
CO	1.4	0.014	379	5.3	1.4
	100.0	1.000		379.0	

1.16 MOLECULAR WEIGHT OF A MIXTURE

The average molecular weight of the mixture is often needed. It is obtained by multiplying the molecular weight of each component by its mole fraction (mol %/100) and adding these values as follows:

Gas	Mol % or Vol %	Mol. Wt.	Proportional Mol. Wt.
H_2	61.4	2	1.228
N_2	19.7	28	5.516
CO_2	17.5	44	7.700
CO	1.4	28	0.392
	100.0		14.84

Therefore, the average (or pseudo) molecular weight of the mixture is 14.84.

1.17 SPECIFIC GRAVITY AND PARTIAL PRESSURE

Normally, specific gravity for gases is a ratio of the lb/ft^3 of the gas involved to the lb/ft^3 of air, both at SPT conditions. Considering a mole of each gas, the volumes are the same and the weight of each volume is the same as the molecular weight. Therefore, specific gravity is calculated as the ratio of these molecular weights and becomes (for the previous example) 14.84 divided by 28.97, or 0.512.

It can be stated that the fraction of the total pressure in a gas mixture due to a given component is equal to the fraction which that component represents of the total moles of gas present:

$$p_a = \frac{pN_a}{N} \quad \text{and} \quad p_b = \frac{pN_b}{N} \quad \text{and} \quad p_c = \frac{pN_c}{N} \tag{1.24}$$

Thus, in a mixture of 15 mol at 15 psia total pressure containing 2 mol of hydrogen, the partial pressure of the hydrogen would be 2/15 of 15 psia, or 2 psia. Volume fractions, if available, may be used in place of mole fractions here.

1.18 RATIO OF SPECIFIC HEATS

The value of k enters into many calculations. A definite relationship exists between the specific heat at constant volume and the specific heat at constant pressure. If we take a mole of gas and determine its heat capacity:

$$Mc_p = Mc_v + 1.99 \tag{1.25}$$

$$Mc_v = Mc_p - 1.99 \tag{1.26}$$

In these formulas, M is the weight of a mole of gas (the molecular weight). These are easily resolved into

$$k = \frac{Mc_p}{Mc_v} = \frac{Mc_p}{Mc_p - 1.99} \tag{1.27}$$

Remembering the unit of specific heat as Btu/lb-°F temperature rise, we can calculate the heat required to increase the temperature of each component gas by 1°F and add them to get the total for the mixture. Mc_p is the heat requirement for 1 mol. For compressor work, it is usual to use this molar heat capacity at 150°F, which is considered an average temperature. A calculation table follows:

Gas	Mol %	Mol Gas/Mol Mixture	Mc_p at 150°F of Component	Product
H_2	61.4	0.614	6.94	4.26
N_2	19.7	0.197	6.98	1.38
CO_2	17.5	0.175	9.37	1.64
CO	1.4	0.014	6.97	0.10
	100.0	1.000		7.38

Note: For convenience, the molar heat capacity at 150°F (Mc_p) is given in Appendix A for most gases.

The molar specific heat (Mc_p) of the mixture is therefore 7.38. Entering this in the formula yields

$$k = \frac{7.38}{7.38 - 1.99} = 1.369 \text{ (say, 1.37)} \tag{1.28}$$

1.19 PSEUDO-CRITICAL CONDITIONS AND COMPRESSIBILITY

Mention has been made of reduced pressure and reduced temperature under the discussion of compressibility. Generalized compressibility curves on this basis are given in Appendix A. They are also applicable to mixtures—for approximations, at least. For a more rigorous treatment, texts such as Ried, et al. [1] should be consulted.

It is necessary to figure mixture pseudo-critical pressure and temperature conditions to be used in calculating the pseudo-reduced conditions to be used in entering the charts. Pressures and temperatures must be in absolute values.

Gas	Mol %	Individual Critical Temperature (°R)	Pseudo T_c (°R)	Individual Critical Pressure (psiA)	Pseudo p_c (psia)
H_2^a	61.4	83	51.0	327	201.0
N_2	19.7	227	44.7	492	96.9
CO_2	17.5	548	95.9	1073	187.8
CO	1.4	242	3.4	507	7.1
Mixture pseudo-criticals			195		493

[a] Must use effective critical conditions (see Appendix A.)

Using these values, the pseudo-reduced conditions can be calculated and probable Z factors obtained from generalized charts.

1.20 WEIGHT-BASIS ITEMS

To certain gas properties of a mixture, each component contributes a share of its own property in proportion to its fraction of the total *weight.* Thus, the following are obtained, the weight factors being fractions of the whole:

$$R' = \frac{W_a R'_a + W_b R'_b + W_c R'_c + \cdots}{W} \tag{1.29}$$

$$c_p = \frac{W_a c_{pa} + W_b c_{pb} + W_c c_{pc} + \cdots}{W} \tag{1.30}$$

$$c_v = \frac{W_a c_{va} + W_b c_{cb} + W_c c_{rc} + \cdots}{W} \tag{1.31}$$

1.21 COMPRESSION CYCLES

Two theoretical compression cycles are applicable to positive displacement compressors. Although neither cycle is commercially attainable, they are used as a basis for calculations and comparisons.

Isothermal compression occurs when the temperature is kept constant as the pressure increases. This requires continuous removal of the heat of compression. Compression follows the formula

$$p_1V_1 = p_2V_2 = \text{constant} \tag{1.32}$$

Near-adiabatic (*isentropic*) *compression* is obtained when there is no heat added to or removed from a gas during compression. Compression follows the formula

$$p_1V_1^k = p_2V_2^k \tag{1.33}$$

where k is the ratio of the specific heats.

Figure 1.7 shows the theoretical no-clearance isothermal and adiabatic cycles on a pV basis for a compression ratio of 4. Area ADEF represents the work required when operating on the isothermal basis, and ABEF, the work required on the adiabatic basis. Obviously, the isothermal area is considerably less than the adiabatic and would be the cycle for greatest compression economy. However, the isothermal cycle is not commercially approachable, although compressors are usually designed for as much heat removal as possible.

Similarly, adiabatic compression is never obtained exactly, since some heat is always rejected or added. Actual compression therefore takes place along a *polytropic cycle*, where the relationship is

$$p_1V_1^n = p_2V_2^n \tag{1.34}$$

The exponent n is determined experimentally for a given type of machine and may be lower or higher than the adiabatic exponent k. In positive displacement compressors, n is usually

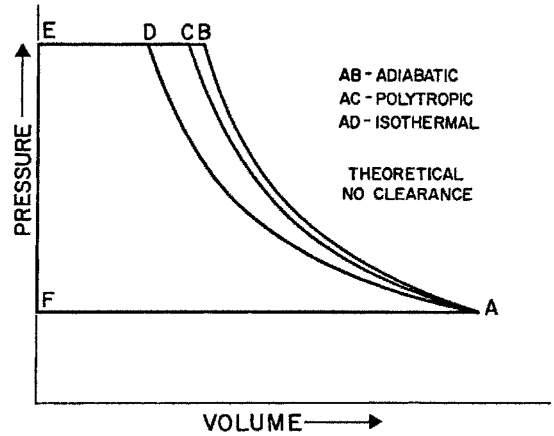

FIGURE 1.7 A p–V diagram illustrating theoretical compression cycles. *(Dresser-Rand Company, Painted Post, N.Y.)*

less than k. Figure 1.7 shows a typical polytropic compression curve for a reciprocating water-jacketed compressor cylinder.

Thermodynamically, it should be noted that the isentropic or adiabatic process is reversible, whereas the polytropic process is irreversible. Also, all compressors operate on a *steady-flow* basis.

Either n or $(n - 1)/n$ can also be experimentally calculated from test data if inlet and discharge pressures and temperatures are known. The following formula may be used:

$$\frac{T_2}{T_1} = \left(\frac{p_2}{p_1}\right)^{(n-1)/n} = r^{(n-1)/n} \tag{1.35}$$

This formula can also be used to estimate discharge temperatures when n or $(n - 1)/n$ is known.

It is obvious that k and n can have quite different values. In certain engineering circles, there has been a tendency to use these symbols interchangeably to represent the ratio of specific heats. This is incorrect; they should be differentiated carefully.

1.22 POWER REQUIREMENT

The power requirement of any compressor is the prime basis for sizing the driver and for selection and design of compressor components. The actual power requirement is related to a theoretical cycle through a *compression efficiency,* which has been determined by test on prior machines. Compression efficiency is the ratio of the theoretical to the actual gas horsepower and, as used by the industry, does not include mechanical friction losses. These are added later either through the use of a mechanical efficiency or by adding actual mechanical losses previously determined. Positive displacement compressors commonly use mechanical efficiencies ranging from 88 to 95%, depending on the size and type of unit.

Historically, the isothermal cycle was the basis used for many years. It is used today in only a few cases. Positive displacement machines are now compared to the isentropic or adiabatic cycle, which more nearly represents what actually occurs in the compressor. In calculating horsepower, the compressibility factor Z must be considered since its influence is considerable with many gases, particularly at high pressure.

An inlet volume basis is universal with positive displacement compressors. It is important to differentiate between an inlet volume on a perfect gas basis (V_{p1}) and one on a real gas basis (V_{r1}). Volumes are at inlet pressure and temperature (p_1 and T_1):

$$V_{r1} = V_{p1}Z_1$$

The basic theoretical adiabatic single-stage horsepower formula is

$$P_T(\text{ad}) = \frac{p_1 V_{r1}}{229}\,\frac{k}{k-1}\,(r^{(k-1)/k} - 1)\,\frac{Z_1 + Z_2}{2Z_1} \tag{1.36}$$

This represents the area of a theoretical adiabatic p–V diagram for the volume per minute (V_1) being handled.

A frequently used basis for V_1 is 100 cfm (real) at inlet conditions, in which case the formula becomes

$$\frac{P_T(\text{ad})}{100} = \frac{P_1}{2.29}\frac{k}{k-1}(r^{(k-1)/k} - 1)\frac{Z_1 + Z_2}{2Z_1} \tag{1.37}$$

Another form current in the industry is the basis for frequently used charts. In this, a volume of 1 million ft^3/day (MMcfd) is used. *In this case only,* V_1 is measured as *perfect gas* at *14.4 psia* and intake temperature, and the actual compressor capacity must be referred to these conditions before computing the final horsepower.

$$\frac{P_T(\text{ad})}{\text{MMcfd}} = 43.67\frac{k}{k-1}(r^{(k-1)/k} - 1)\frac{Z_1 + Z_2}{2} \tag{1.38}$$

Since the isothermal cycle is based on no temperature change during compression, heat is removed continuously as generated, and there is theoretically no gain by multiple staging. Therefore, Eq. (1.39) holds for any number of stages as long as r is the overall or total compression ratio:

$$P_T(\text{iso}) = \frac{p_1 V_{r1} \ln r}{229}\frac{Z_1 + Z_2}{2Z_1} \tag{1.39}$$

1.23 COMPRESSIBILITY CORRECTION

In the preceding equations a correction is indicated for deviation from the perfect gas laws—the compressibility. This involves the determination of compressibility at both intake and discharge conditions. Intake pressure and temperature are known, and compressibility at these conditions can be obtained directly from specific gas charts or by the reduced condition method using generalized charts. To obtain Z at discharge conditions, it is necessary to determine the discharge temperature. The discharge pressure is known.

On the adiabatic cycle as applied to positive displacement units, it is customary to use the *theoretical* discharge temperature in calculations. In an actual compressor, many factors are acting to cause variation from the theoretical, but *on average,* the theoretical temperature is closely approached, and any error introduced is slight.

Adiabatic compression is *isentropic* (i.e., the entropy remains constant). If temperature–entropy diagrams are available for the gas involved, the theoretical discharge temperature can be read directly. Otherwise, it is necessary to calculate it using the following relationships:

$$\frac{T_2}{T_1} = \left(\frac{p_2}{p_1}\right)^{(k-1)/k} = r^{(k-1)/k} \tag{1.40}$$

Note that all pressures and temperatures are absolute.

Equations (1.36) through (1.39) are theoretical and are not affected by gas characteristics such as molecular weight, specific gravity, and actual density at operating conditions.

These all have an effect on actual power requirements, however, and proper allowances are made by designers.

1.24 MULTIPLE STAGING

All *basic* compressor elements, regardless of type, have certain limiting operating conditions. Basic elements are single stage (i.e., the compression and delivery of gas is accomplished in a single element) or a group of elements are arranged in parallel. The most important limitations include the following:

- Discharge temperature
- Pressure differential
- Effect of clearance (ties in with compression ratio)
- Desirability of saving power

There are reasons for multiple staging other than these, but they are largely for the designer of the specific unit to keep in mind. No ready reference rules can be given. When any limitation is involved, it becomes necessary to multiple-stage the compression process (i.e., do it in two or more steps). Each step will use at least one *basic element* designed to operate in series with the other elements of the machine.

A reciprocating compressor usually requires a separate cylinder for each stage with intercooling of the gas between stages. Figure 1.8 shows the *p–V* combined diagram of a two-stage 100-psig air compressor. Further stages are added in the same manner. In a reciprocating unit, all stages are commonly combined into one unit assembly.

It was noted previously that the isothermal cycle (constant temperature) is the more economical of power. Cooling the gas after partial compression to a temperature equal to the

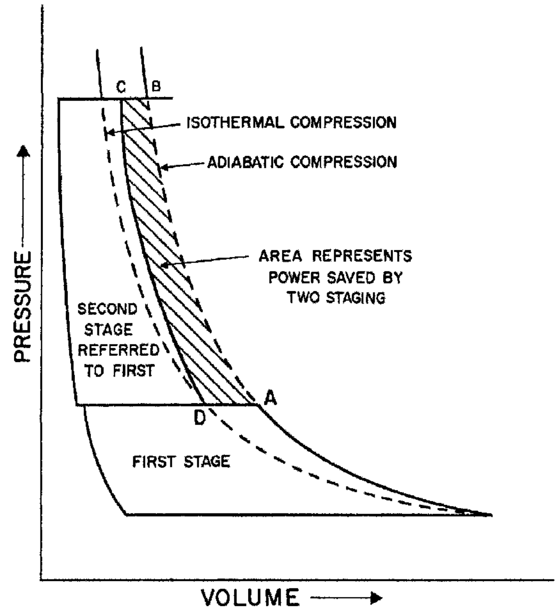

FIGURE 1.8 Combined *p–V* diagram for a two-stage air compressor. *(Dresser-Rand Company, Painted Post, N.Y.)*

original intake temperature (back to the isothermal) obviously should reduce the power required in the second stage. Area ABCD represents the work saved over single-stage adiabatic compression in this particular case.

For minimum power *with perfect intercooling* between stages, there is a theoretically best relation between the intake pressures of succeeding stages. This is obtained by making the ratio of compression the same in each stage and assumes the intake temperature to be the same in all stages. The formula used is based on the *overall* compression ratio

$$r_s = \sqrt[s]{r_t} \tag{1.41}$$

where r_s = compression ratio per stage
s = number of stages
r_t = overall compression ratio ($p_{\text{final}}/p_{\text{initial}}$)

For example:

two-stage: $r_s = \sqrt[2]{r_t}$
three-stage: $r_s = \sqrt[3]{r_t}$
four-stage: $r_s = \sqrt[4]{r_t}$

Commercial displacement compressors are, as a rule, initially sized on the preceding basis. The final machine, however, usually operates at compression ratios varying slightly from these to allow for other factors that the designer must consider. Each stage is figured as a separate compressor, the capacity (V_1) of each stage being calculated separately from the first-stage real intake volume, and corrected to the actual pressure and temperature conditions existing at the higher-stage cylinder inlet and also for any change in the moisture content if there is condensation between stages in an intercooler. The theoretical power per stage can then be calculated and the total horsepower obtained.

On the basis of perfect intercooling and equal compression ratios per stage, Eqs. (1.36) through (1.38) can be altered to obtain *total* theoretical power by multiplying the first term by the number of stages s and dividing the exponent of r by s. The compression ratio r must be the total ratio. However, since compression ratios seldom are equal and perfect intercooling is seldom attained, it is believed that the best general method of figuring is to use one stage at a time.

1.25 VOLUME REFERENCES

Since the most generally required quantities are original inlet volume and inlet volume to subsequent stages (both on a per-minute basis), a summary of equations follows in which the word *dry* means that there is no water vapor in the quantity of gas or gas mixture involved. From scfm (cfm measured at 14.7 psia, 60°F, dry),

$$V_1 = \text{scfm}\left(\frac{14.7}{p_1}\right)\frac{T_1}{520}Z_1 \tag{1.42}$$

From weight flow (W lb/min, dry),

$$V_1 = \frac{W(1545)T_1}{144p_1M} Z_1 \tag{1.43}$$

From mole flow (N mol/min, dry),

$$V_1 = \frac{N(379)(14.7)T_1}{p_1(520)} Z_1 \tag{1.44}$$

From cfm measured at conditions other than those at intake cfm$_g$ *at* p_g, T_g, Z_g, *dry*:

$$V_1 = \text{cfm}_g \times \frac{p_g}{p_1}\frac{T_1}{T_g}\frac{Z_1}{Z_g} \tag{1.45}$$

In all the preceding, pressure is lb/in^2 absolute.

If water vapor is a component in the gas analysis and the total analysis percentage amounts to 100, the preceding equations may be applied to the wet gas. Use the proper value for M in Eq. (1.43), however. Often, water vapor is segregated, and the space it occupies must be included separately. This is a partial pressure problem (see Section 1.8). Multiplying any of the preceding volume equations by the following will apply the correction:

$$\frac{p_1}{p_1 - p_v} \tag{1.46}$$

where p_v is the actual vapor pressure of the contained moisture.

1.26 CYLINDER CLEARANCE AND VOLUMETRIC EFFICIENCY

Cylinder clearance cannot be eliminated completely. *Normal* clearance will vary approximately between 4 and 16% for most standard cylinders. There are special low-compression-ratio cylinders where normal clearance will be much greater. Normal clearance does not include clearance volume that may have been added for other purposes, such as capacity control.

Although the amount of clearance in a given cylinder is of little importance to the average user (guarantees being made on actually delivered capacity), its effect on capacity should be understood because of the wide application of a variation in clearance volume for capacity control and other purposes. Normal clearance variations have no effect on power requirements.

When a piston has completed the compression and delivery stroke and is ready to reverse its movement, gas at discharge pressure is trapped in the clearance space. This gas expands on the return stroke until its pressure is sufficiently below intake pressure to open the suction valves. The effect of this reexpansion on the quantity of fresh gas drawn in is shown on a p–V diagram (Fig. 1.9). The actual capacity is materially affected.

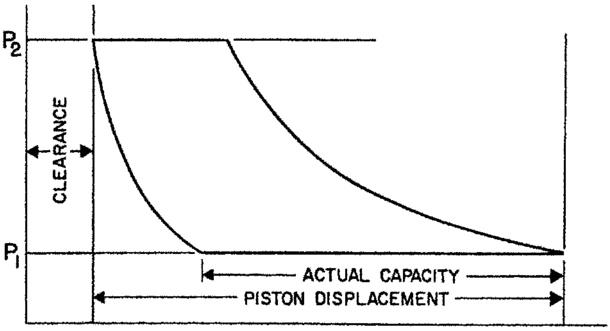

FIGURE 1.9 Work done on a volume of gas trapped in cylinder clearances (clearance volume) represents an inefficiency. *(Dresser-Rand Company, Painted Post, N.Y.)*

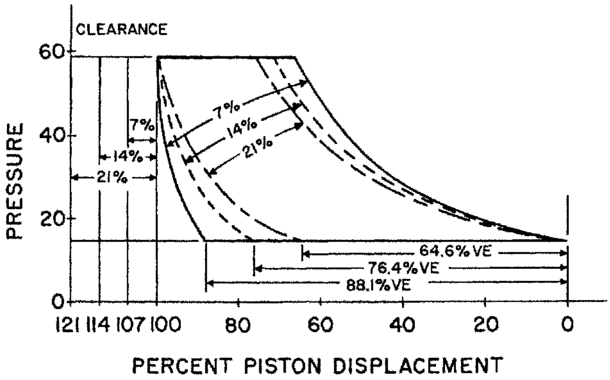

FIGURE 1.10 Theoretical *p–V* diagrams based on a compression ratio of 4.0, *k* of 1.40, and clearances of 7, 14, and 21% *(Dresser-Rand Company, Painted Post, N.Y.)*

The theoretical formula for volumetric efficiency as a percentage is

$$\eta_v = 100 - C(r^{1/k} - 1) \tag{1.47}$$

As a practical matter, there are factors that modify this, and an accepted formula for rough estimates is

$$\eta_v = 100 - C(r^{1/k} - 1) - L \tag{1.48}$$

Here, the term L is introduced to allow for the effect of variables such as internal leakage, gas friction, pressure drop through valves, and inlet gas preheating. The term L is difficult to generalize, but it might be 5% for a moderate-pressure oil-lubricated air compressor. A higher value of L will be necessary with a light gas than with a heavy gas because of increased leakage.

Inspection of the equations shows that the *VE decreases* (1) as the clearance *increases,* (2) as the compression ratio *increases,* and (3) as *k decreases.*

Figure 1.10 shows a series of theoretical *p–V* diagrams based on an *r* value of 4.0, a *k* value of 1.40, and clearances of 7, 14, and 21%. The effect of clearance is clearly indicated. Rather wide clearance ranges have been used, for illustrative purposes.

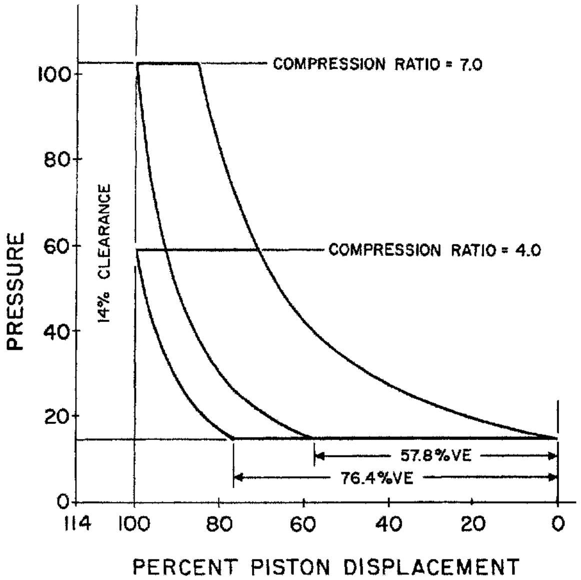

FIGURE 1.11 Effect of clearance at moderate- and high-compression-ratio conditions. A p–V diagram for a ratio of 7 is superimposed on a diagram for a ratio of 4, all else being the same. *(Dresser-Rand Company, Painted Post, N.Y.)*

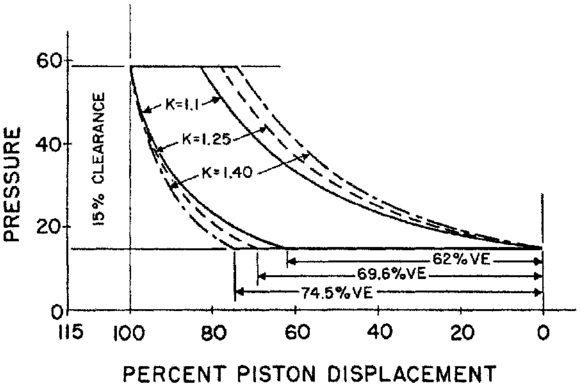

FIGURE 1.12 Effect of k on volumetric efficiency. The clearance is high, for illustrative purposes. *(Dresser-Rand Company, Painted Post, N.Y.)*

Figure 1.11 illustrates the effect of clearance at moderate- and high-compression-ratio conditions. A p–V diagram for a ratio of 7 is superimposed on a diagram for a ratio of 4, all else being the same. A relatively high clearance value (14%) is used for illustrative purposes. The clearance for any commercial compressor designed for a ratio of 7 would be much less than 14%.

Figure 1.12 illustrates the effect of k on volumetric efficiency. The clearance is high for illustrative purposes. Clearance obviously concerns designers more at the higher compression ratios and when handling gases with low specific heat ratios, although they will always endeavor to maintain clearance at the lowest value consistent with adequate valving and running clearances.

1.27 CYLINDER CLEARANCE AND COMPRESSION EFFICIENCY

Just as clearance in a cylinder has predominant control over the volumetric efficiency (VE), so does the valve area in a cylinder have predominant control over the compression efficiency (CE). However, to obtain low clearance and a high VE value, the designer finds it necessary to limit the size and number of valves. This, however, may tend to lower the efficiency of compression and raise the horsepower. The designer must therefore evaluate both factors and arrive at a compromise, quite a common engineering procedure.

As a general rule, high VE and high CE (low power requirement) do not go together; one cannot attain both. There are, however, four rough divisions the designer uses, the type of application determining to a considerable degree whether one or the other factor takes precedence or whether they are balanced. They might be classified as follows:

	Compression Ratio	More Important Factor
Very high	10–30 (vacuum pumps)	Clearance
High	8–10 max.	Clearance principally, valving somewhat
Moderate	5 max.	Balanced
Low	2 or less	Valving

REFERENCE

1. Ried, Prausnitz, and Poling, *The Properties of Gases and Liquids*, 4th ed., McGraw-Hill, NY, 1988.

2

RECIPROCATING PROCESS COMPRESSOR DESIGN OVERVIEW*

The reader may best be introduced to the subject of this chapter by way of a component or construction feature review. We may note that today's reciprocating process compressors are the result of many years of development and experience. As of 2006, one U.S. manufacturer alone had manufactured reciprocating engines and compressors for over 100 years with well over 50,000 process units shipped.

Reciprocating process compressors are a very efficient and reliable method of compressing almost any gas mixture from vacuum to over 3000 atm. They have numerous applications in refining, chemical, and petrochemical plants. Power ratings vary up to 18,000 kW, with capacities up to about 35,000 m^3/h at compressor inlet conditions.

Reciprocating compressors have great flexibility. Being positive displacement compressors, reciprocating units can easily compress a wide range of gas densities, from hydrogen, with a molecular weight of 2, to gases such as chlorine, with a molecular weight of 70.

Reciprocating compressors can quickly adjust to varying pressure conditions with stage compression ratios ranging from 1.1 on recycle services to over 5 on gases with low k values or low ratios of specific heat. Typical compression ratios are about 3 per stage to limit discharge temperatures to perhaps 150 to 175°C (300 to 350°F). Some reciprocating compressors have as many as six stages, to provide a total compression ratio over 300.

Conservative rotative and piston speeds are used for process compressors, as most units operate continuously for many years with only occasional shutdowns for maintenance. With many applications the gases can cause problems because of being corrosive, containing entrained liquid and/or foreign abrasive particles. For these reasons, low- to medium-speed compressors are used, which have rotative speeds from 275 to 600 rpm, with piston speeds varying from 3 to 5 m/s (600 to 1000 ft/min) and compressor strokes from 150 to

---

* Developed and contributed by G. A. Lentek, Ronald W. Beyer, and Richard G. Schaad, senior product specialists, Dresser-Rand Company, Engine Process Compressor Division, Painted Post, N.Y.

A Practical Guide to Compressor Technology, Second Edition, By Heinz P. Bloch

460 mm (6 to 18 in.). Normally, for higher-kilowatt-rated units, a longer strokes and slower speeds are used. Also, for nonlubricated applications, lower rotative and lower piston speeds are recommended to obtain improved piston and packing ring life.

The most common reciprocating compressor in use today is the balanced-opposed design (Figs. 2.1 through 2.3). This design maximizes the operating life of larger reciprocating units by minimizing unbalanced forces and moments. Two to 10 cylinders are used, with the reciprocating and rotating weights balanced as closely as possible. Also, single-cylinder units can be built with opposed balance weight crossheads used as necessary. Figure Y and similar vertically arranged reciprocating compressors are shown in Figs. 2.4 through 2.8.

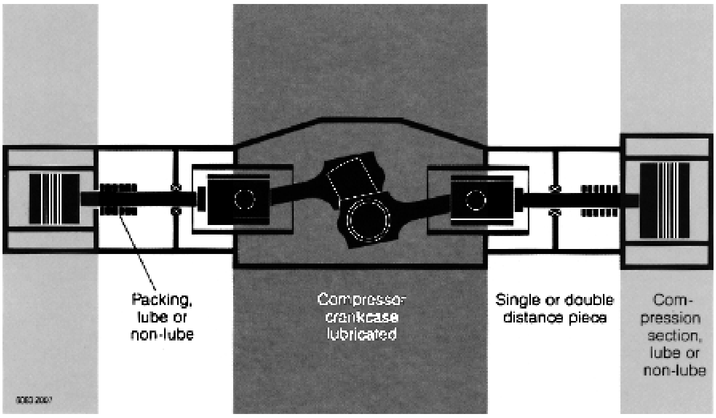

FIGURE 2.1 Principle of a balanced-opposed reciprocating process compressor. *(Sulzer-Burckhardt, Winterthur and Basel, Switzerland)*

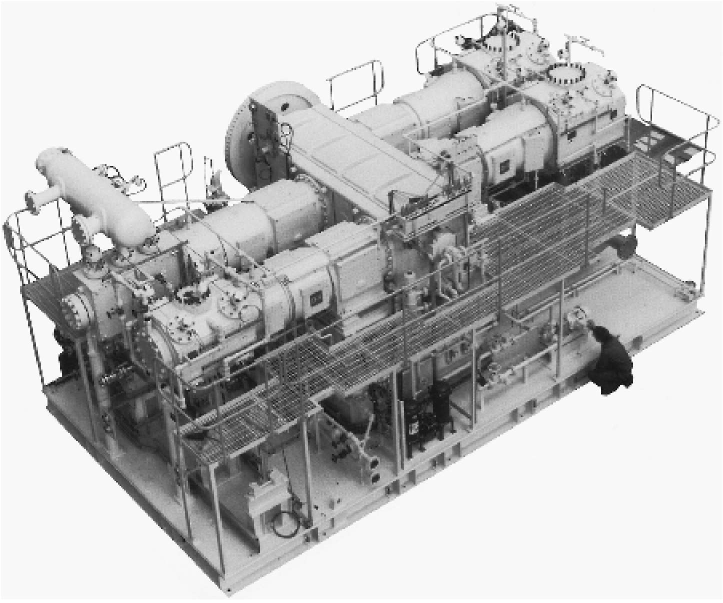

FIGURE 2.2 Balanced-opposed reciprocating compressor package. *(Dresser-Rand Company, Painted Post, N.Y.)*

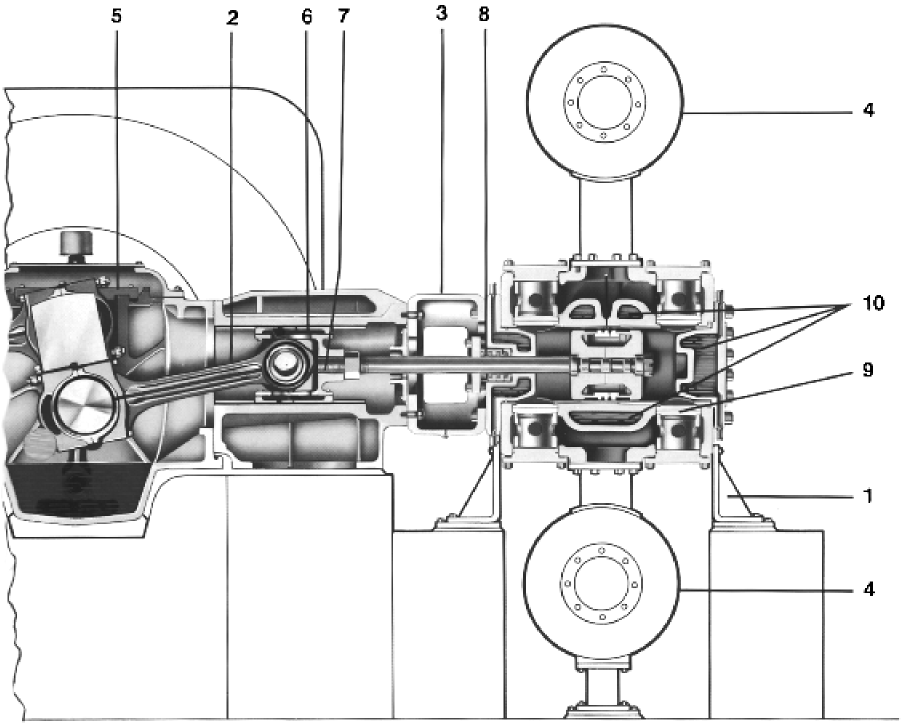

1 = Cylinder support
2 = Connecting rod
3 = Distance piece
4 = Pulsation
5 = Frame
6 = Crosshead
7 = Piston rod
8 = Packing
9 = Valves
10 = Water jackets

FIGURE 2.3 Right-hand portion of a balanced-opposed reciprocating compressor. *(Dresser-Rand Company, Painted Post, N.Y.)*

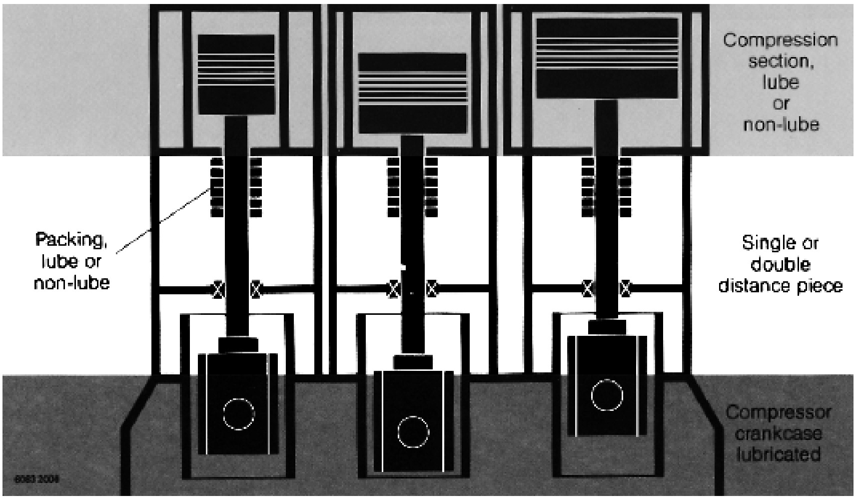

FIGURE 2.4 Vertically arranged compressor cylinders. *(Dresser-Rand Company, Painted Post, N.Y.)*

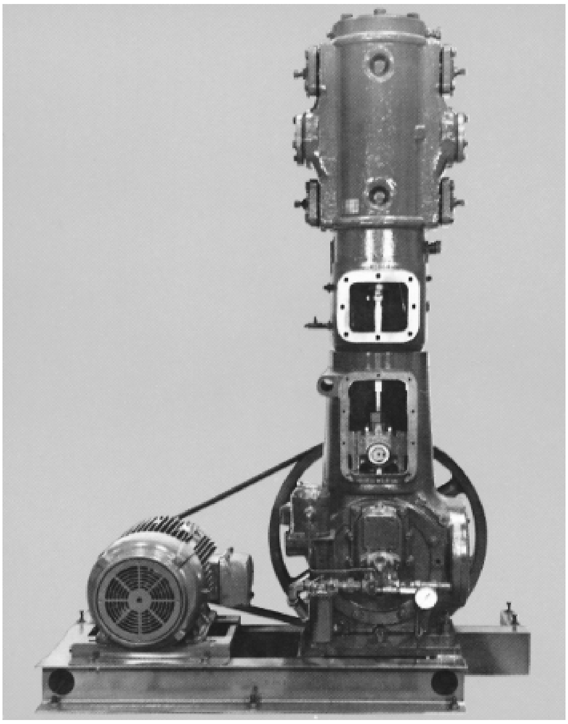

FIGURE 2.5 Vertically oriented reciprocating compressor. *(Cooper Cameron Corporation, Cooper-Bessemer Reciprocating Products Division, Grove City, Pa.)*

Unbalanced forces are produced by reciprocating and rotating masses. Reciprocating forces occur in all compressors from acceleration and deceleration of the reciprocating weights (piston and rod, crosshead, and a portion of the connecting rod). A compressor designer tries to equalize the reciprocating weights on each crankthrow to balance the forces. Rotating forces result from the centrifugal force produced from the unbalanced weights of the crankthrow and part of the connecting rod.

Only primary unbalanced forces occurring at the compressor speed and secondary unbalanced forces occurring at twice the compressor speed are considered significant in compressor foundation design (refer to Fig. 2.9). Unbalanced primary and secondary moments also exist in most compressors. With a two-cylinder unit having equal reciprocating weights on crankthrows set at 180° to each other, all primary and secondary forces cancel each other. Only couples or moments are transmitted to the foundation. With good foundation design, these moments are not harmful.

Only six crankthrow units can be perfectly balanced, with all unbalanced forces and moments zero. However, perfect balance is normally required only for offshore platform installations or for foundations installed without the use of piles on extremely poor (swamp-like) soil conditions.

Compressors installed on well-designed foundations over compacted soil or rock will withstand the normal unbalanced forces and moments of a reciprocating compressor. Multiple compressors should be installed on foundations tied together with a common concrete mat to spread out the area resisting any unbalanced forces and moments. Compressors are designed to withstand these forces and moments and merely transmit them to the foundation. However, it is very important that a strong grout bond be obtained between the compressor frame and the foundation. Epoxy-type grouts are highly recommended.

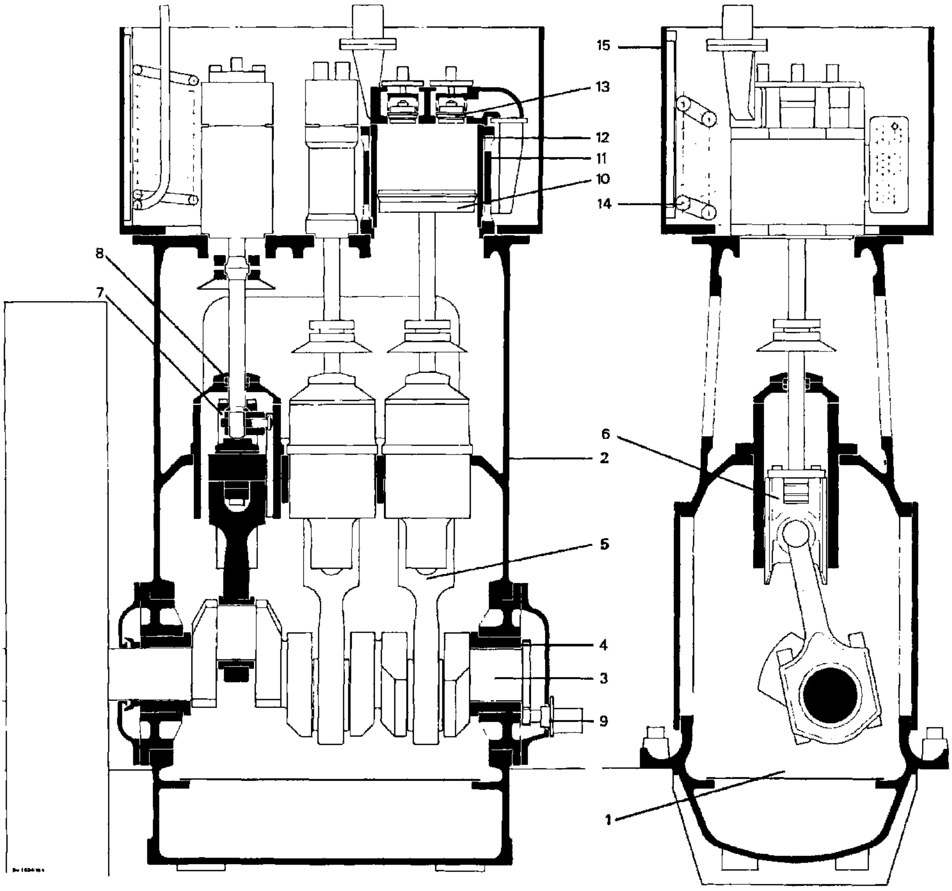

1 = Crankcase
2 = Frame
3 = Crankshaft
4 = Bearing
5 = Connecting rod
6 = Crosshead
7 = Ratchet drive for rotary motion of piston
8 = Cover
9 = Crankcase lubrication group
10 = Piston
11 = Cylinder
12 = Cylinder liner
13 = Valves
14 = Gas cooler
15 = Cooling-water tank

FIGURE 2.6 Sectional drawing of a water-lubricated vertical reciprocating compressor used in oxygen service. *(Sulzer-Burckhardt, Winterthur and Basel, Switzerland)*

2.1 CRANKSHAFT DESIGN

Up to 10 crankthrow units have been supplied for large compressors. The cranks are arranged with equal angles between each crank to provide optimum unbalanced forces and the smoothest overall crank effort torque (see Fig. 2.10). Even-number crankthrow units are arranged with 180° opposed pairs of cranks to cancel out inertia forces; odd-number crankthrow units require special crank-angle layout or dummy crossheads, as shown in Fig. 2.11.

Cylinders create pulsating compression forces and vibratory torque on the crankshaft with peaks that can exceed the average compressor horsepower torque by up to five times. The crankshaft design must be conservative to withstand these crank effort and vibratory

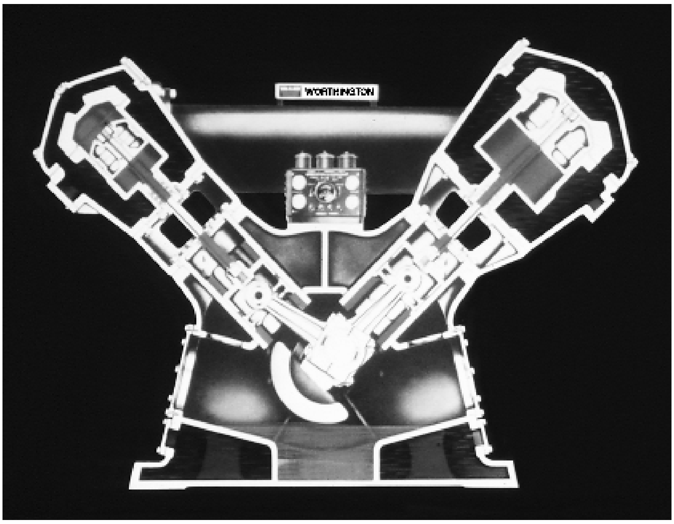

FIGURE 2.7 Reciprocating compressor with Y arrangement of cylinders. *(Dresser-Rand Company, Painted Post, N.Y.)*

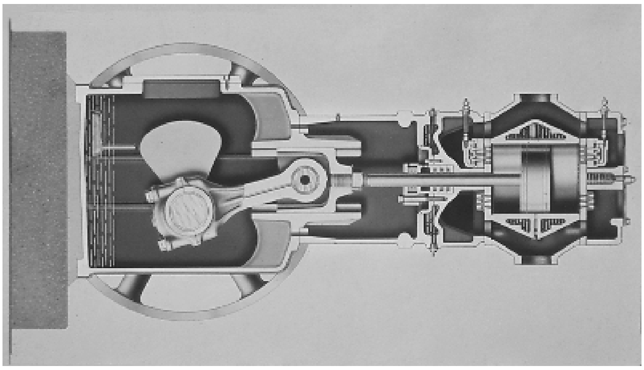

FIGURE 2.8 Reciprocating compressor with vertically arranged cylinders. *(Dresser-Rand Company, Painted Post, N.Y.)*

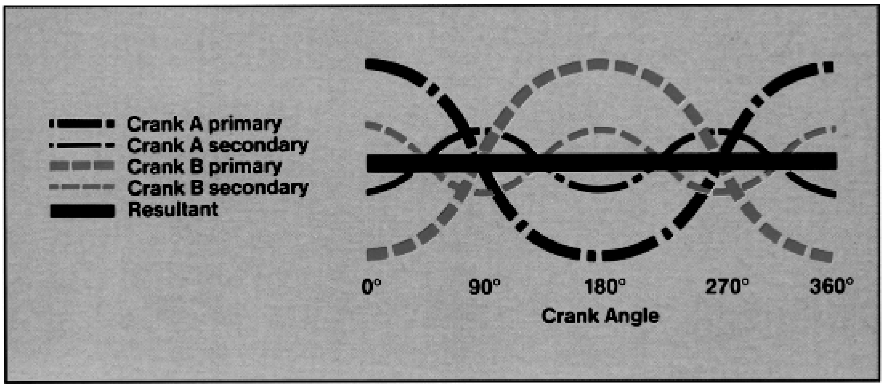

FIGURE 2.9 Crank-angle diagram demonstrating how primary and secondary forces balance each other out by acting in opposite directions. *(Dresser-Rand Company, Painted Post, N.Y.)*

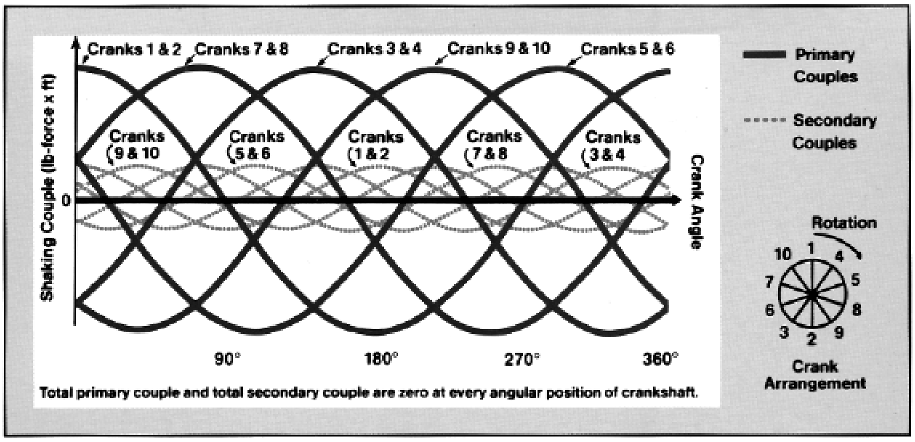

FIGURE 2.10 Preferred crank arrangement and resulting couples for a 10-throw compressor. Pairs of cranks are uniformly displaced at 36°. Therefore, reciprocating and rotating weights in opposing cylinders will not normally be equal. A variety of techniques are used to add weights to reciprocating parts to achieve the desired balance. *(Dresser-Rand Company, Painted Post, N.Y.)*

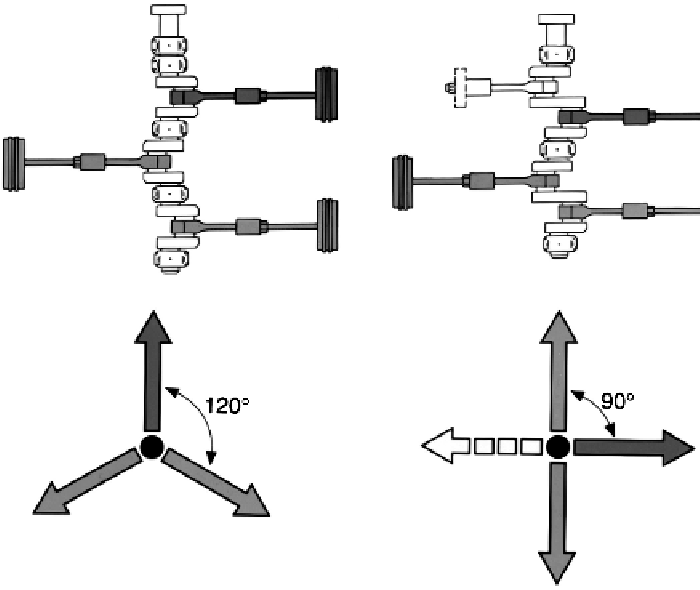

FIGURE 2.11 Three-throw crank angles at 120° (left) vs. 90° (right). Note the dummy crosshead required on the right. *(Dresser-Rand Company, Painted Post, N.Y.)*

stresses. For compressors over a small size of about 150 kW per crank, the crankshafts should be forged steel.

A customarily applied American Petroleum Institute specification (API 618) requires all crankshafts to be forged steel and heat-treated with ground bearing surfaces. Experienced manufacturers further require the cranks to be upset forged from the steel billet to provide

FIGURE 2.12 Two-throw crankshaft. *(Dresser-Rand Company, Painted Post, N.Y.)*

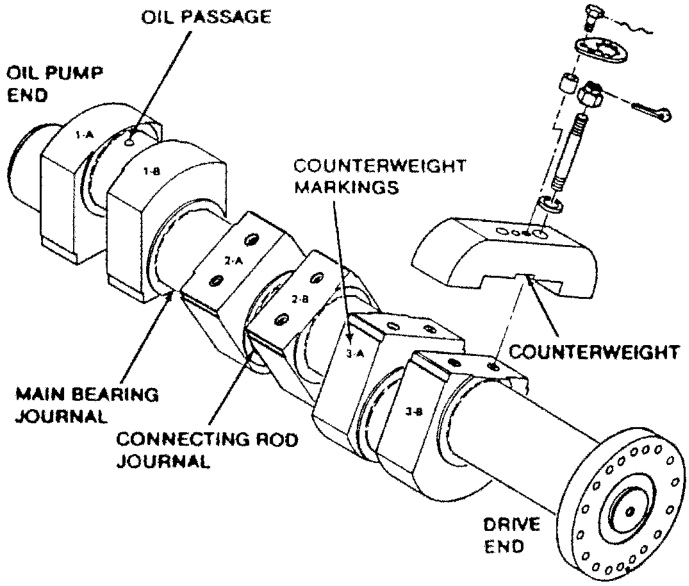

FIGURE 2.13 Three-throw crankshaft showing oil passages and counterweights. *(Dresser-Rand Company, Painted Post, N.Y.)*

stronger grain flow through the crank webs and cranks instead of machining the cranks from a billet. Materials used are alloy steel AISI 1045 or AISI 4140 with ultrasonic inspection by the crankshaft supplier. Crankshafts are purchased completely finished from suppliers who have special facilities to upset forge and grind the journals and crankpins. Also, special attention must be given to providing polished radii between the cranks and crank webs. Oil passages are drilled to permit oil flow from the journals to the crankpins. The intersections of these holes must be radiused and polished to prevent stress concentration points. Separate bolted-on or integral counterweights are used to help offset unbalanced forces and moments (Figs. 2.12 and 2.13).

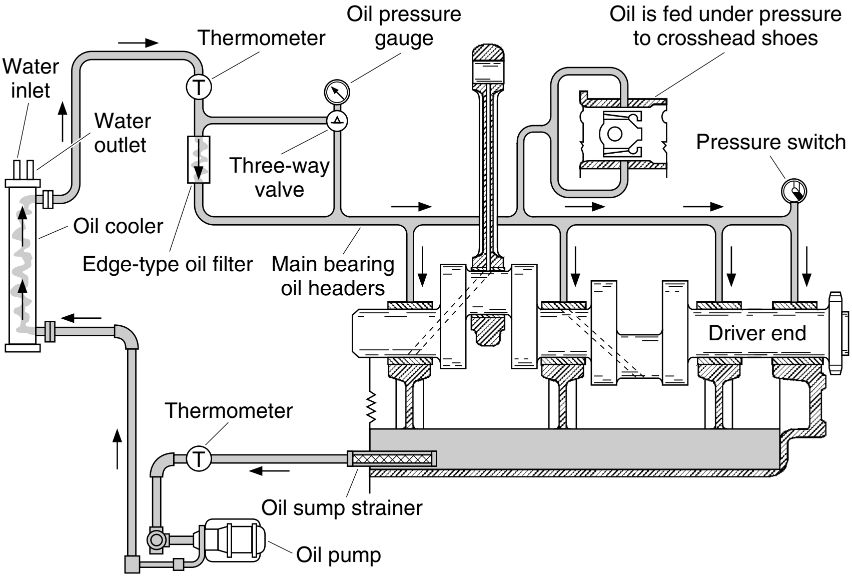

FIGURE 2.14 Force-feed lubrication system for reciprocating compressor. *(Dresser-Rand Company, Painted Post, N.Y.)*

2.2 BEARINGS AND LUBRICATION SYSTEMS

Most units have replaceable precision-bored sleeve-type aluminum alloy crankpin and main bearings. No field fitup or adjustment is necessary. Aluminum alloy has a high bearing load capability and is not likely to score the crankshaft surface should a bearing failure occur. Other bearing materials used are steel-backed aluminum, steel- or bronze-backed, babbitt-lined, and trimetal (steel–bronze–babbitt). With any of these bearings systems it is very important to maintain clean oil piping and filters and specified lubrication pressures and temperatures.

All large process compressors require forced-feed lubrication with a minimum scope of supply, as shown in Fig. 2.14, including oil pump, oil cooler, and oil filter. Redundancy and instrumentation requirements are governed by the criticality of a given process, and API 618 covers available options.

2.3 CONNECTING RODS

Connecting rods (Figs. 2.15 and 2.16) on process reciprocating machines are typically made of forged steel and manufactured with a closed die to provide good grain flow throughout the piece. Forced lubrication oil passages are drilled the length of the rod to permit oil flow from the crankpin to the crosshead pin bushing. Crosshead bushings are made of replaceable bronze. Connecting rod bolts are special forgings, and larger sizes have rolled threads for maximum strength.

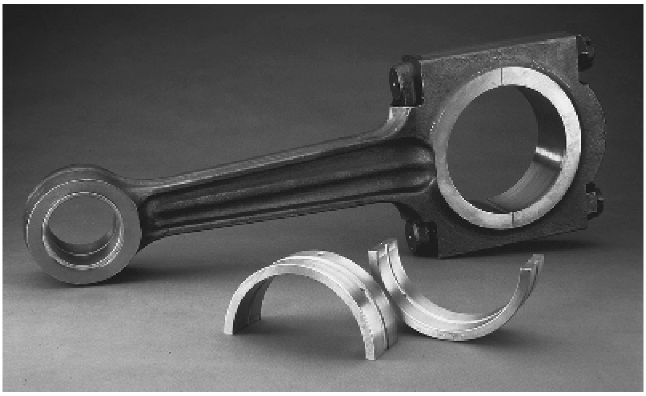

FIGURE 2.15 Typical connecting rod. *(Dresser-Rand Company, Painted Post, N.Y.)*

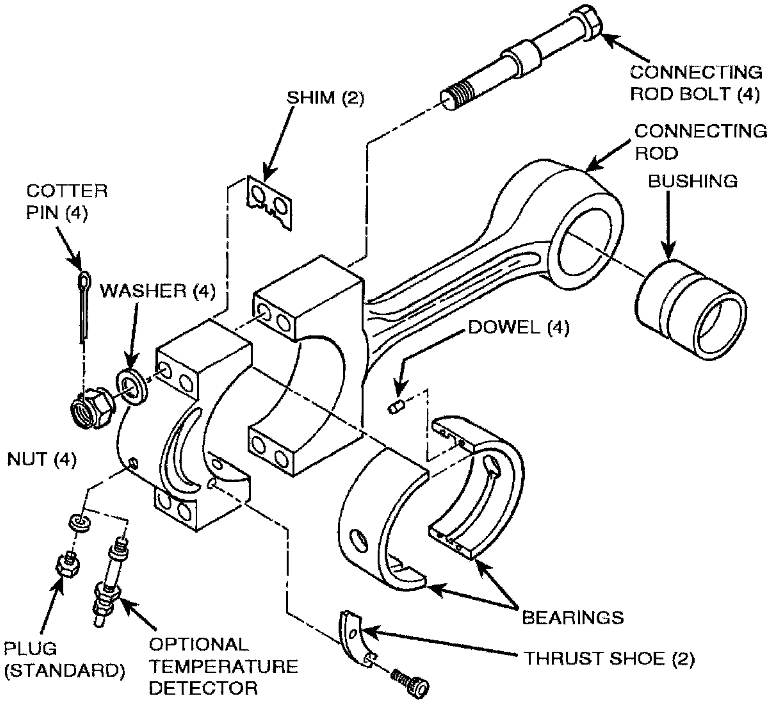

FIGURE 2.16 Component parts of a typical connecting rod. *(Dresser-Rand Company, Painted Post, N.Y.)*

2.4 CROSSHEADS

A crosshead is a sliding component typically manufactured of cast steel, or cast or ductile iron, with options for cast steel to meet API 618. For units over 150 kW, replaceable shim-adjusted top and bottom crosshead shoes are supplied. Most crossheads are of floating-pin design (Figs. 2.17 and 2.18); however, some larger units use a fixed-pin design. Either type is acceptable for reliable long-term, operation.

FIGURE 2.17 Crosshead for a reciprocating compressor. *(Dresser-Rand Company, Painted Post, N.Y.)*

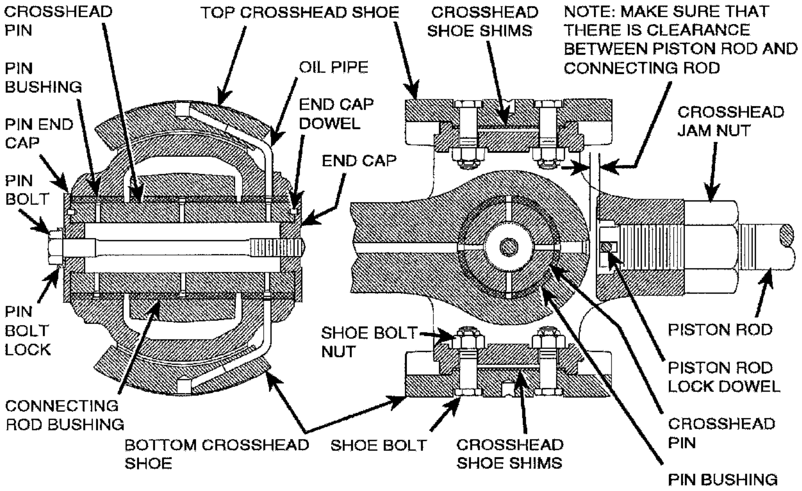

FIGURE 2.18 Cross-sectional views of crosshead components. *(Dresser-Rand Company, Painted Post, N.Y.)*

2.5 FRAMES AND CYLINDERS

Although a few manufacturers have offered fabricated, or welded, equipment frames; the majority of compressor frames are of cast iron (Fig. 2.19). Frames have suitable ribbed bearing supports to eliminate frame deflection and maintain crankshaft alignment under all operating conditions. Frames over 750 kW have either a tie-rod or a tie-bar over each main bearing to prevent deflections from the inherently high horizontal gas and inertia forces. Frames are totally enclosed to withstand outdoor conditions and have large maintenance access covers.

Each cylinder must be designed for the capacity, pressure, temperature, and gas properties of a specific project. Available cylinder materials include cast iron (Figs. 2.20 and 2.21), ductile

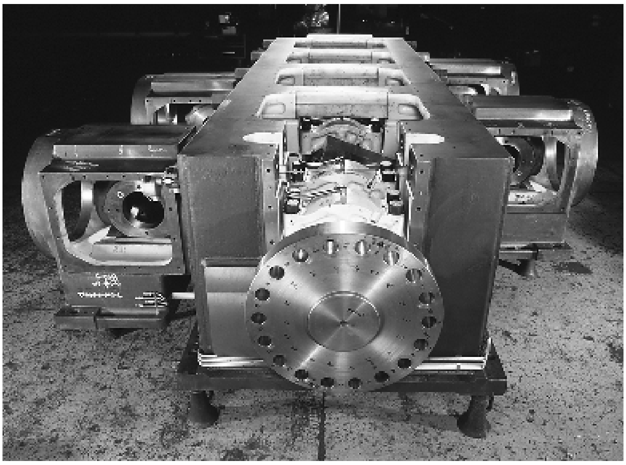

FIGURE 2.19 Cast iron compressor frame assembly showing double bearings at the drive end. *(Dresser-Rand Company, Painted Post, N.Y.)*

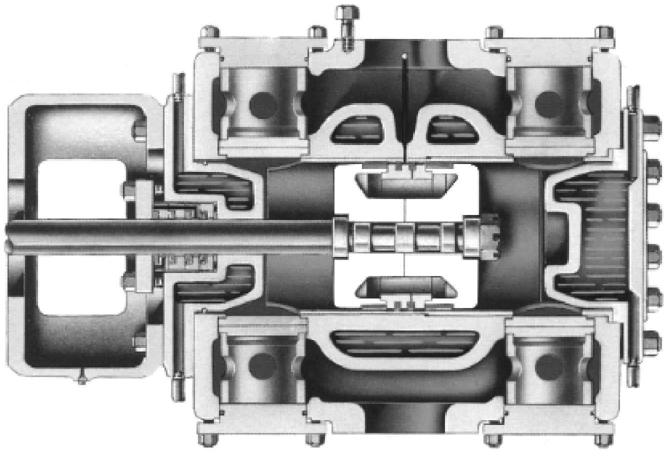

FIGURE 2.20 Low- or medium-pressure double-acting cylinder with a flanged liner and a three-piece piston. Liberally sized jackets reduce thermal stresses and aid in heat dissipation. *(Dresser-Rand Company, Painted Post, N.Y.)*

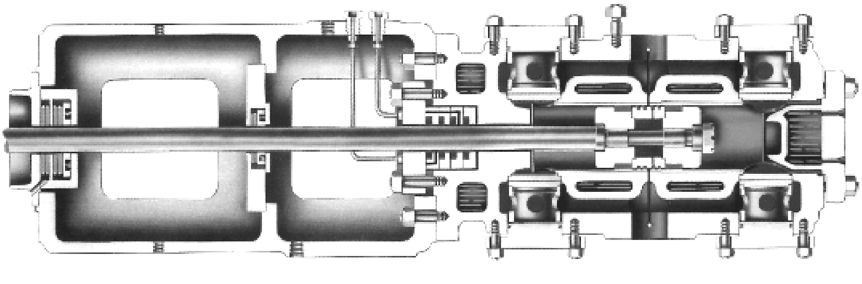

FIGURE 2.21 Medium- or high-pressure double-acting cylinder with a flanged liner. The liner is locked in place by a flange between the head and the cylinder barrel. A two-compartment distance piece designed to contain flammable, hazardous, or toxic gases is illustrated. *(Dresser-Rand Company, Painted Post, N.Y.)*

or nodular iron (Fig. 2.22), cast steel, and forged steel (Figs. 2.23 and 2.24). Manufacturers such as Dresser-Rand have also built large numbers of fabricated (welded) compressor cylinders (Fig. 2.25), with carbon and stainless steel being the primary materials.

Tandem cylinders (Fig. 2.26) are supplied where space and cost savings are important. Similar considerations may lead to the selection of step or truncated cylinders (Fig. 2.27).

Cylinders normally have separate force-feed lubrication systems using special oils. However, many services can be supplied nonlubricated. Nonlubricated service requires

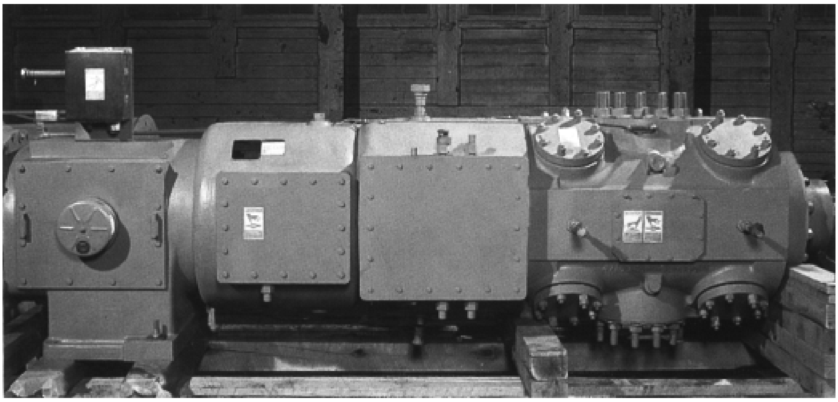

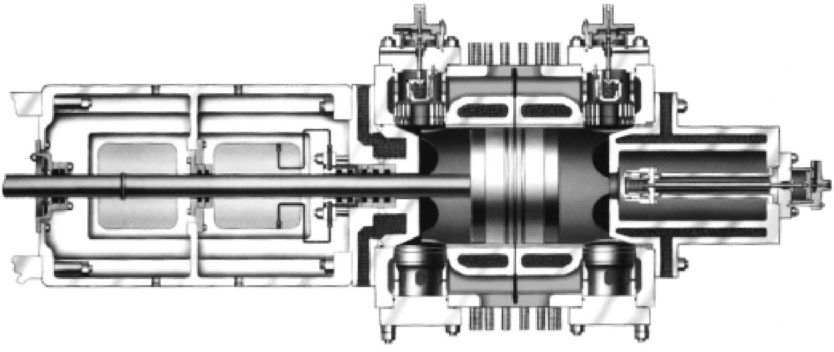

FIGURE 2.22 Cast iron or nodular iron cylinders shown with a two-compartment distance piece and frame extension. Pressures to 1500 psi are typical. *(Dresser-Rand Company, Painted Post, N.Y.)*

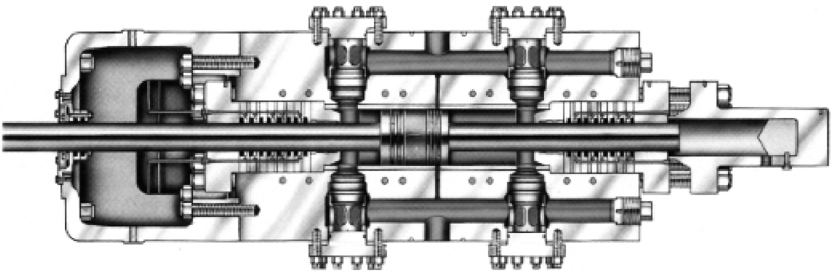

FIGURE 2.23 Forged steel cylinder with a tailrod design for pressures to 7500 psi. Tailrod construction is used to pressure-balance a piston or to achieve rod load reversals. This load reversal may be needed to properly lubricate the crosshead pin bearing. *(Dresser-Rand Company, Painted Post, N.Y.)*

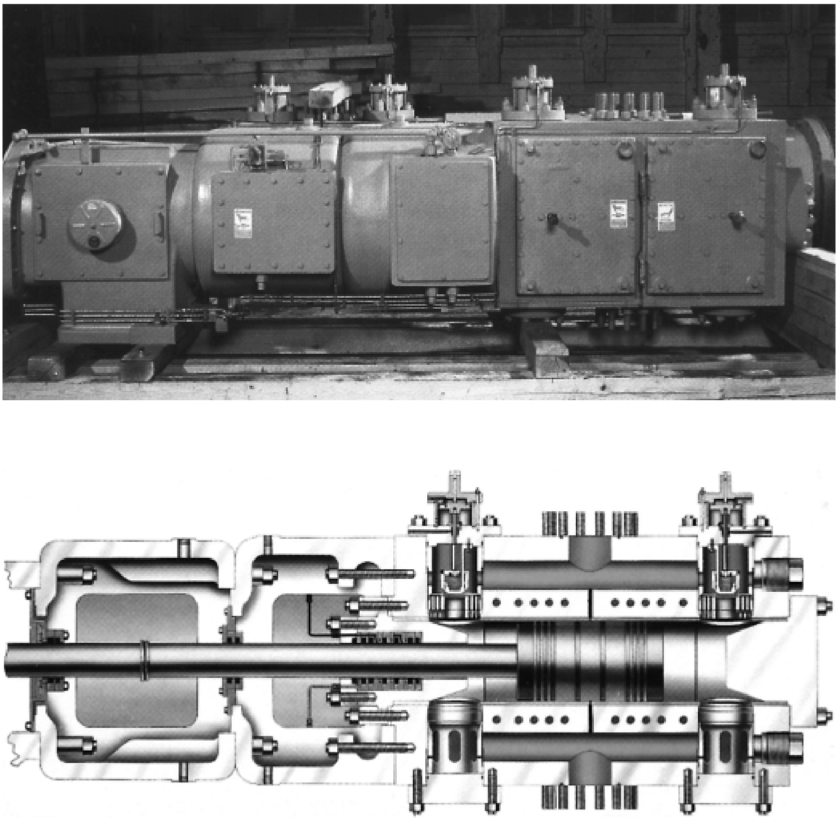

FIGURE 2.24 Forged steel cylinder with two-compartment distance pieces and a frame extension for 3000-psi refinery service. *(Dresser-Rand Company, Painted Post, N.Y.)*

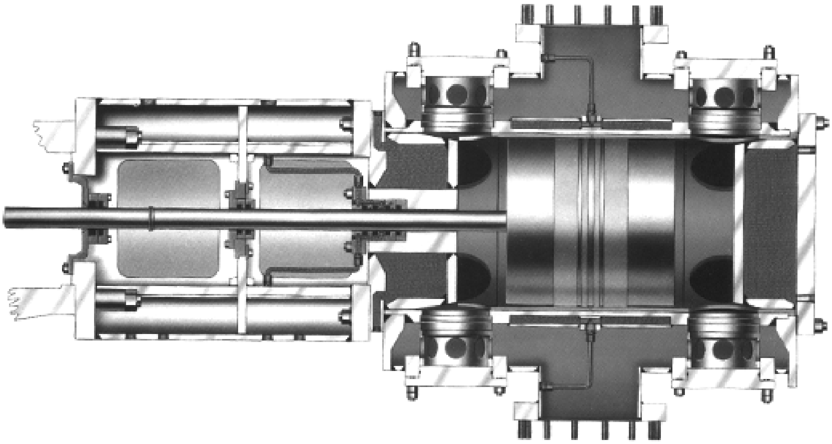

FIGURE 2.25 Fabricated carbon or stainless steel cylinders for special applications. *(Dresser-Rand Company, Painted Post, N.Y.)*

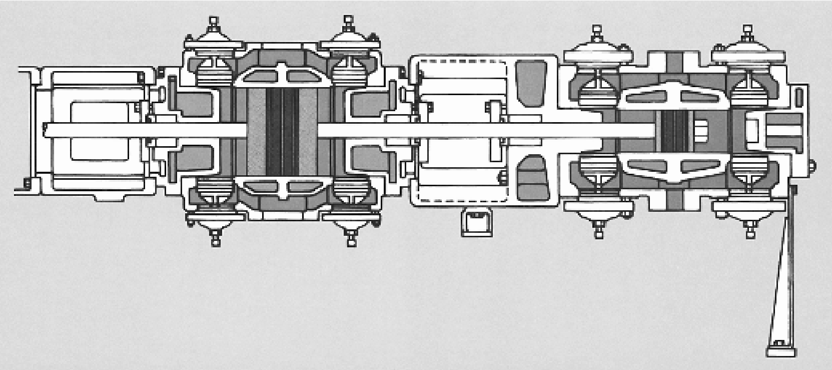

FIGURE 2.26 Tandem cylinders are furnished with a second piston connected in-line with the first piston. *(Dresser-Rand Company, Painted Post, N.Y.)*

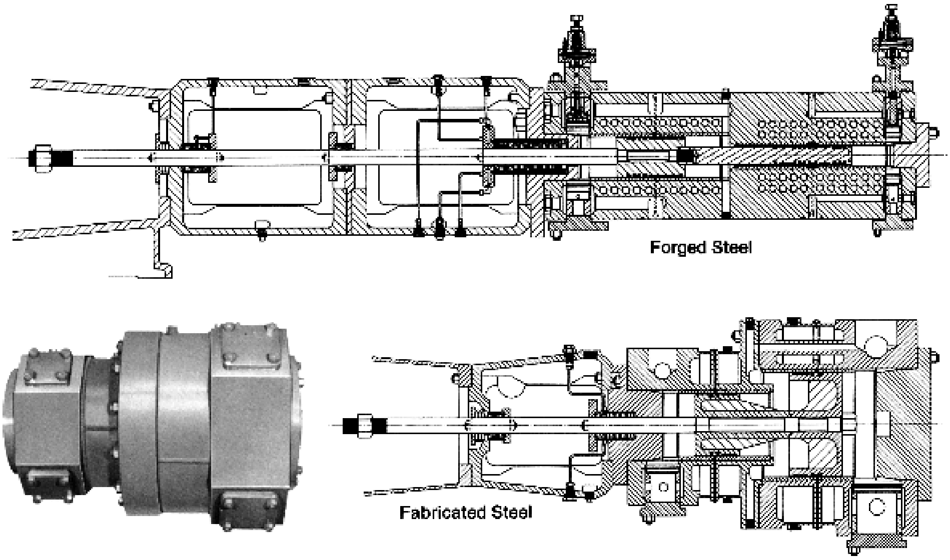

FIGURE 2.27 Truncated or step cylinders allow for space-saving multistaging. *(Cooper Cameron Corporation, Cooper-Bessemer Reciprocating Products Division, Grove City, Pa.)*

very clean gas by suction filtration to 1 μm if necessary and piston speeds reduced to below 4 m/s (700 ft/min) for acceptable piston, rider, and packing ring life. (Labyrinth piston compressors represent a special and important subcategory of nonlubricated process gas compressors and are covered later in the book).

Most cylinders are double-acting: that is, compression takes place in one half of the cylinder as the piston moves toward the cylinder head and also as the piston moves toward the crank end of the machine. However, cylinders can be made single-acting for special applications such as for high pressures such as those used in automotive fuel gas compression, where only a small displacement is required. Both conventional and tandem cylinders are shown in Fig. 2.28, which depicts a trunk piston compressor. Trunk piston machines resemble automobile engines in that they do not incorporate crossheads.

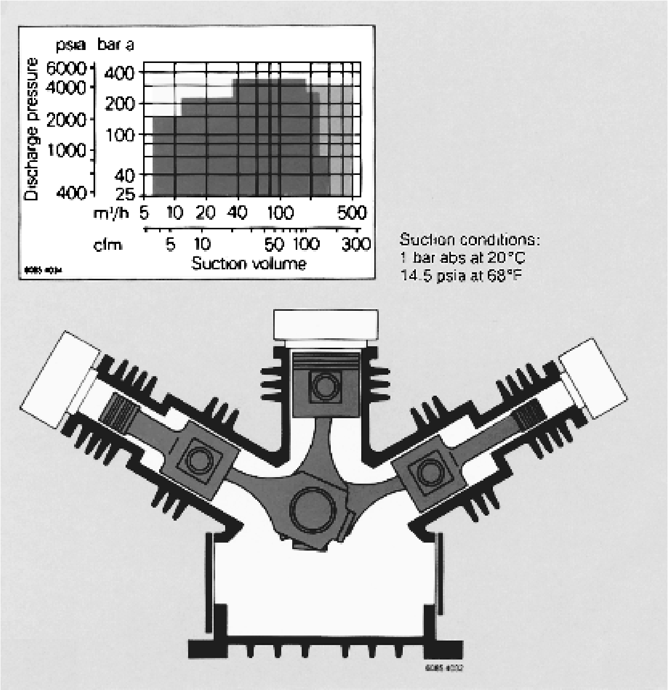

FIGURE 2.28 Trunk piston compressor with conventional stage 1 and step-type higher-stage pistons. *(Sulzer-Burckhardt, Winterthur and Basel, Switzerland)*

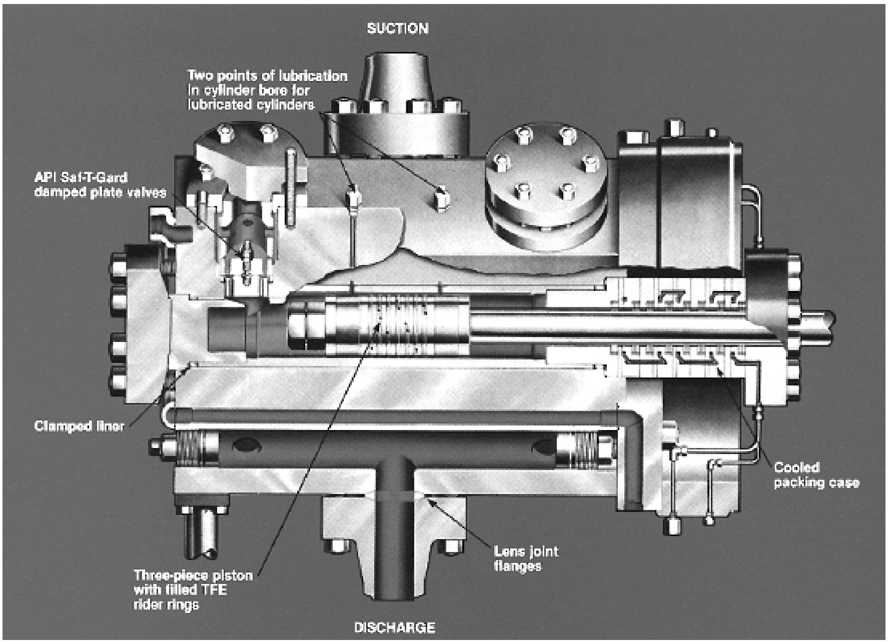

FIGURE 2.29 Compressor cylinder with clamped liner, cooling, and lubricating provisions. *(Dresser-Rand Company, Painted Post, N.Y.)*

Most process gas cylinders on large double-acting compressors are equipped with replaceable full-length liners that are held in place to prevent end movement or rotation. Liners (Fig. 2.29) are always used in steel cylinders. Standard liners are centrifugal cast iron, which provides a good dense bearing surface. Other materials, such as NI-resist, are available for special applications.

2.6 COOLING PROVISIONS

For large process gas compressors, forced cooling through the cylinder barrel and heads is most common (Fig. 2.30). If water is used, it is very important that clean treated water be used. Untreated river water is not acceptable because excessive deposits and fouling buildup will occur in the cylinder jackets, creating serious damage from cylinder overheating. A closed cooling system with a tempered water–glycol mixture is highly recommended to minimize deposits and prevent liquid dropout from saturated gases in the cylinders. A typical cooling system as shown in Fig. 2.31 may be used for one or more units.

The purpose of cylinder cooling is to equalize cylinder temperatures and prevent heat buildup. This cooling removes only the frictional heat. The heat of compression is removed by the inter- or aftercoolers. Thermosyphon or static-filled cooling (Fig. 2.32) can be used for cylinders having discharge temperatures below 88°C (190°F). The coolant supply temperatures should be at least 6°C (10°F) above the gas inlet temperature to prevent formation of liquid in the cylinder gas passages, which can cause serious valve and piston problems.

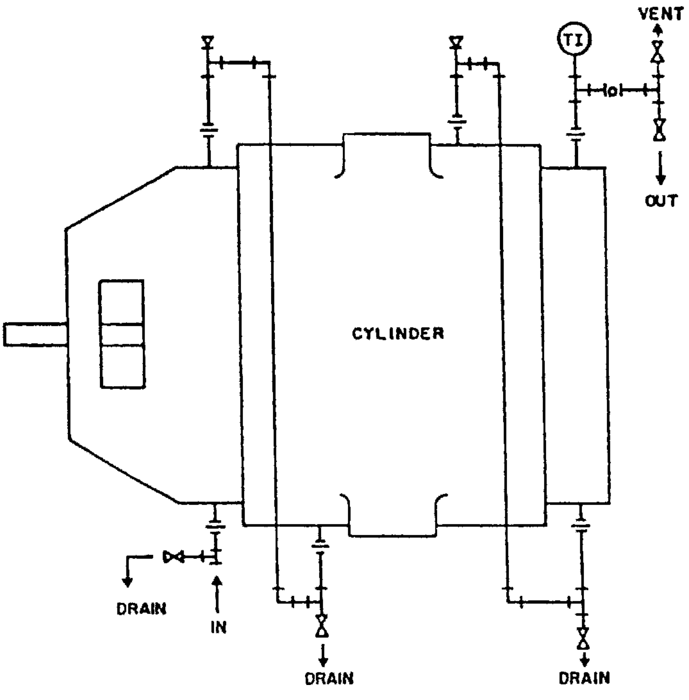

FIGURE 2.30 Forced cooling arrangement for large compressor cylinders. *(Dresser-Rand Company, Painted Post, N.Y.)*

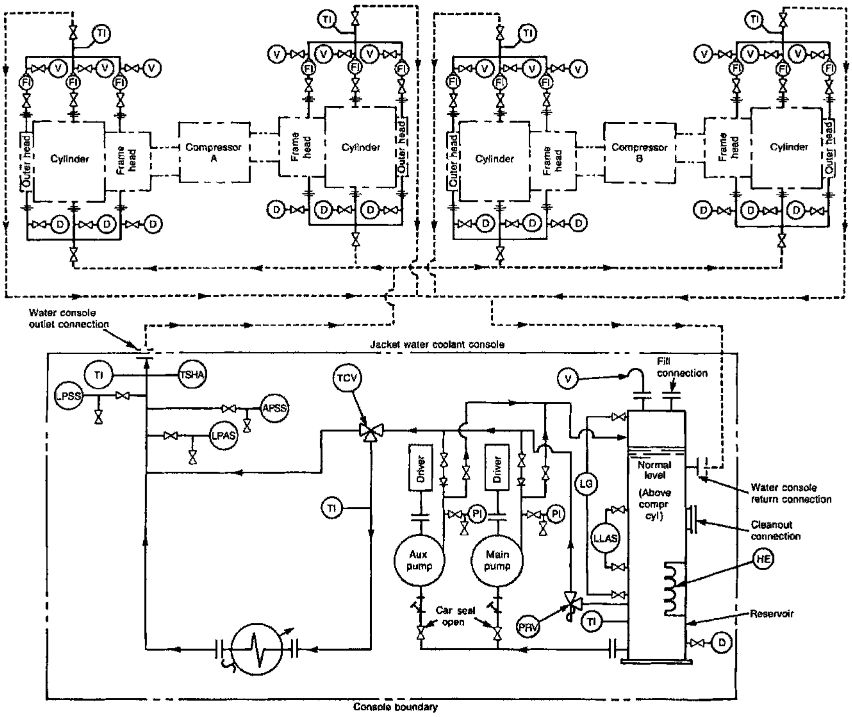

FIGURE 2.31 Closed cooling water system per API 618. *(American Petroleum Institute, Washington, D.C.)*

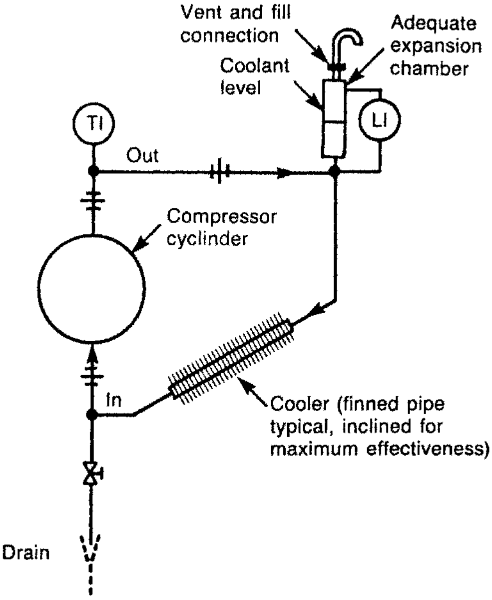

FIGURE 2.32 Thermosyphon cooling arrangement per API 618. *(American Petroleum Institute, Washington, D.C.)*

2.7 PISTONS

Cast iron is the piston material of choice for most applications. Aluminum is used for large pistons and on higher-speed units to reduce and balance inertia forces. For some high-pressure applications, over 150-atm absolute pressure one-piece integral steel piston and rod construction is used for higher piston strengths.

2.8 PISTON AND RIDER RINGS

Most process units today are equipped with Teflon (PTFE) or other high-performance polymer piston rings. Normally, two or three single-piece diagonal-cut rings without expanders are used. For some high-pressure applications (over 300 atm absolute) three-piece bronze segmental rings are used. Also, for some nonlubricated applications other special plastics or high-performance polymers have been used. One typical assembly is illustrated in Fig. 2.33.

For many lubricated and all nonlubricated applications, TFE rider rings are used. The rider rings support the weight of the piston and piston rod. Rider rings may be split type, located in the center of the piston (Fig. 2.34), or band type, stretched onto the piston. The bearing pressure on rider rings is normally below 0.7 kg/cm^2 (10 lb/in^2). As noted earlier, it

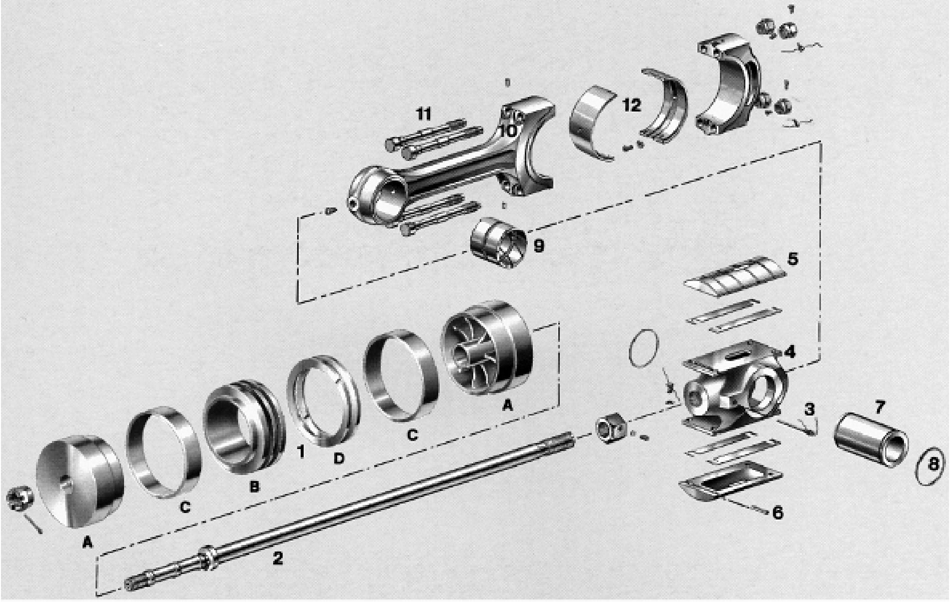

1. **3-piece piston** allows for two solid slip-on Rider Bands.
   - A. Piston end bells
   - B. Ring carrier
   - C. Solid rider bands
   - D. Piston rings
2. **Piston rod**
3. **Dowel pin** so piston rod can not turn
4. **Box-section crosshead**
5. **Babbitt-faced cast iron cross-head slippers**
6. **Crosshead slipper key**
7. **Full-floating crosshead pin**
8. **Crosshead-pin retainers**
9. **Renewable crosshead pin bearing**
10. **High-strength connecting rod**
11. **Connecting bolts**
12. **Split crankpin bearing**

FIGURE 2.33 Reciprocating components of a typical compressor. *(Dresser-Rand Company, Painted Post, N.Y.)*

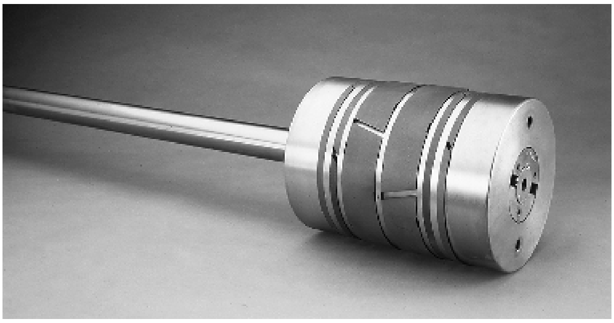

FIGURE 2.34 PTFE rider bands used to support pistons of contact-type nonlubricated compressors. *(Dresser-Rand Company, Painted Post, N.Y.)*

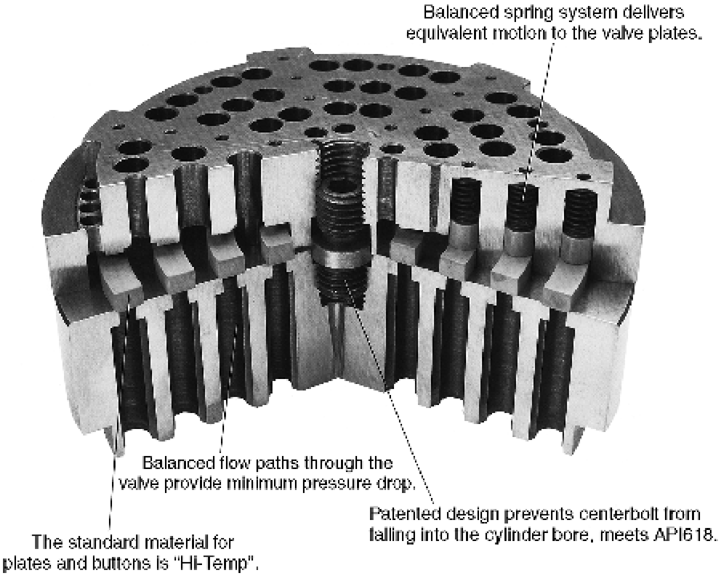

FIGURE 2.35 Plate valve. *(Dresser-Rand Company, Painted Post, N.Y.)*

is critical to have clean gas for long piston, rider, and packing ring life. Dirt or piping rust and scale carryover into cylinders will cause very rapid ring, cylinder bore, and valve wear.

2.9 VALVES

Virtually all process gas and moderate size-to-large air compressors use spring-loaded gas-actuated valves. Two of the many basic valve configurations are depicted in Figs. 2.35 through 2.39. Although certain claims and counterclaims are made by the various manufacturers, they share a desire to provide durable configurations compatible with gas composition and pressure. Also, valves are almost always symmetrically placed around the outer circumference of the cylinder and can normally be removed and serviced from the outside.

Good specifications mandate configurations and arrangements that will preclude installation errors. Reversing a suction valve could make it function as a discharge valve, and

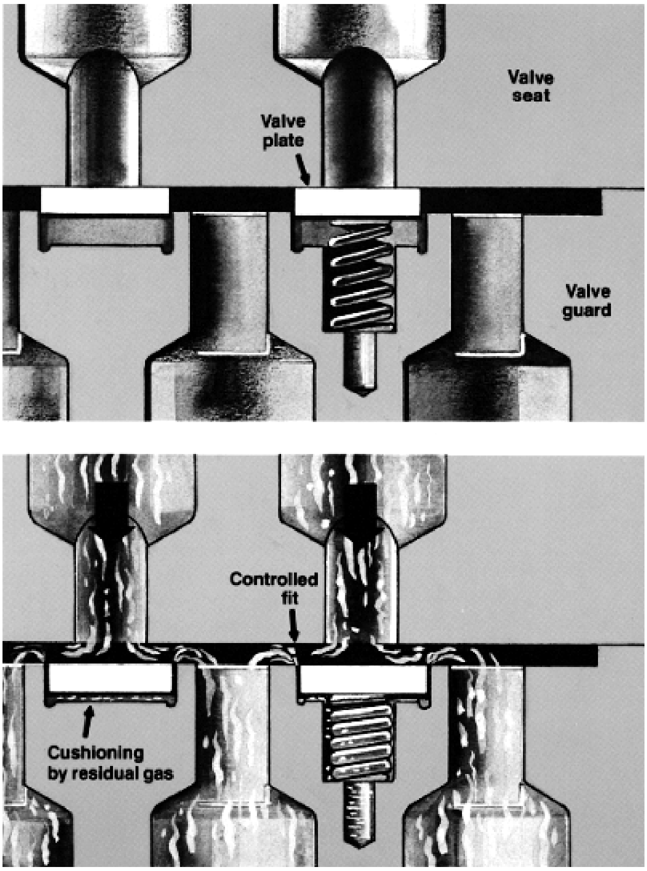

FIGURE 2.36 Cutaway of the closed and open positions of a damped plate valve, illustrating the pneumatic damping feature. *(Dresser-Rand Company, Painted Post, N.Y.)*

vice versa. Similarly, a bad valve design might risk deteriorating components falling into the compression space of a cylinder. Quite obviously, catastrophic damage and safety incidents could be the end result.

To ensure against structural failure of the guard or seat, API-compliant valve designs feature the use of a center bolt. The bolt is designed so that even in the event of its failure, it cannot drop into the compression chamber. The center bolt provides a very important part in valve fixed-clearance and physical strength. Without the bolt, all of the differential pressure would be sustained by the valve seat alone. The center bolt allows the designer to use the physical strength available in the guard since the center bolt ties the guard and seat together. The result is smaller clearance volumes, which result directly from thinner seats and guards than would be possible with designs not using a center bolt. Poorly designed valves can also cause noticeable decreases in compression efficiency; valve lift and valve area affect gas velocity and must be dimensioned properly.

Figure 2.35 depicts a plate valve. Enhanced versions of plate valves will sometimes apply the principle of pneumatic cushioning by allowing a small amount of gas to be trapped, as shown in Fig. 2.36. Deck-and-a-half and double-deck valves (Figs. 2.37 and 2.38) are designed to incorporate larger flow areas and thus improved efficiency.

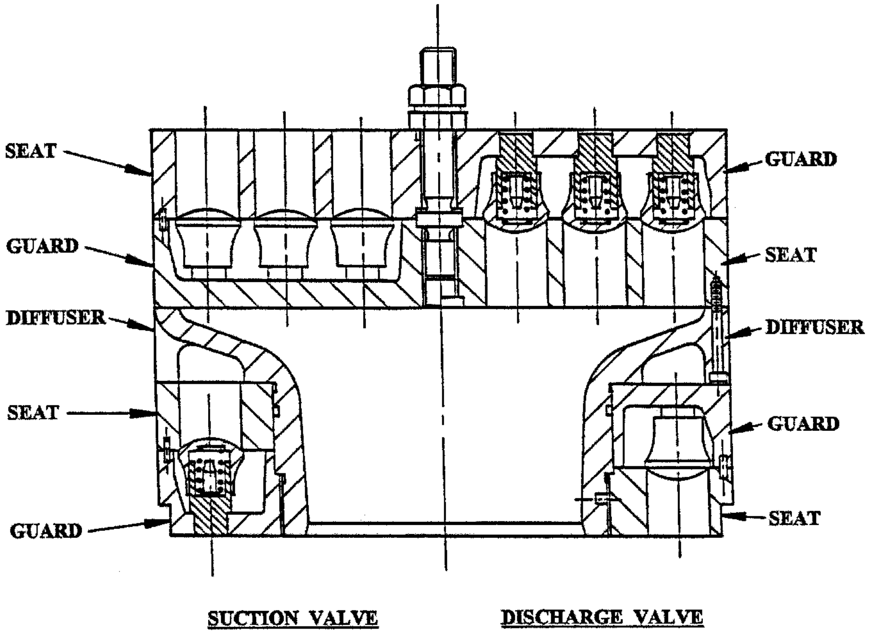

FIGURE 2.37 Deck-and-a-half compressor valve. *(Anglo Compression, Inc., Mount Vernon, Ohio)*

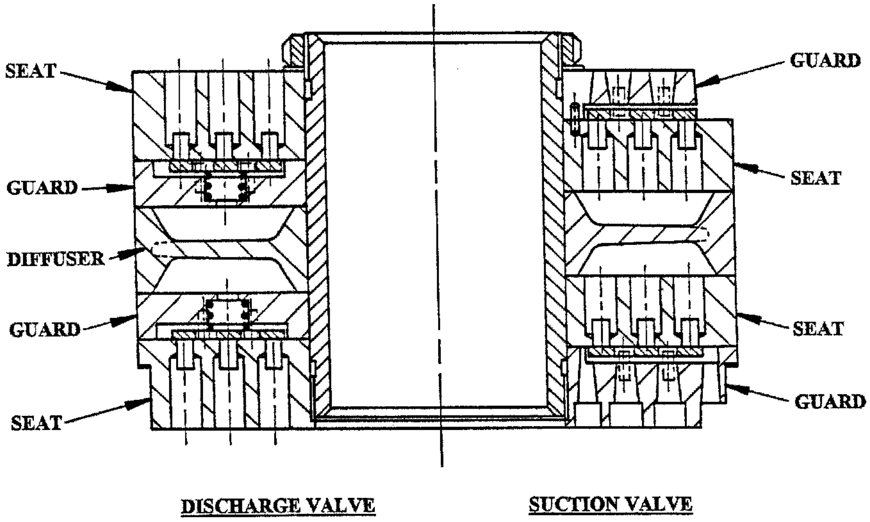

FIGURE 2.38 Double-deck valve, ported plate, opposed-flow type. *(Anglo Compression, Inc., Mount Vernon, Ohio)*

Although the description of valves has emphasized the plate-type design, circular channel ring-type valves as well as poppet designs are available. Straight channel, circular channel ring, and poppet designs were created primarily for high- and medium-pressure low-ratio applications, respectively. Many valves incorporate components made of high-performance polymers. PEEK (polyether ether ketone) is a typical material.

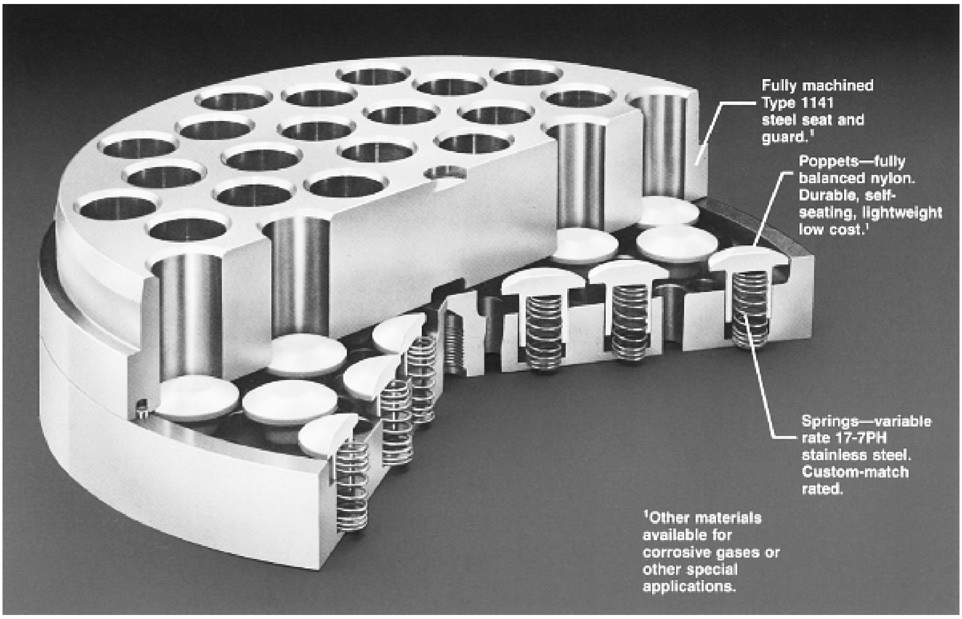

FIGURE 2.39 Poppet valve. *(Cooper Cameron Corporation, Cooper-Bessemer Reciprocating Products Division, Grove City, Pa.)*

In most high-pressure applications the damped valve has replaced the channel design. The lower plate mass, the greater damping, and a plate with fewer stress concentrations have led to the success of the damped valve over the channel design. The poppet valve has been applied primarily to low-ratio slow-to-medium-speed gas transmission service. Because of the alignment problems of valve seat to valve guard, maintenance has occasionally been a problem. Nevertheless, well-designed poppet valves (Fig. 2.39) are widely used in the application range illustrated in Fig. 2.40. It should be noted that valve designs continue to improve. As an example, the Cook Manley Company manufactures elastomer-enhanced Moppet compressor valves, which have produced outstanding results in the field.

The basis for a valve or compressor manufacturer's dynamic calculations is depicted in Fig. 2.41. Poor valve designs are revealed in lift vs. crank-angle diagrams (Fig. 2.42) and p–V diagrams such as those shown in Fig. 2.43 and in Figs. 3.10 through 3.20.

2.10 PISTON RODS

The standard recommended piston rod material is AISI 4142 alloy steel, induction hardened throughout the packing travel to a Rockwell hardness 50C minimum. Other materials, such as stainless steel, are available for increased corrosion-resistance properties. However, these materials cannot be hardened above Rockwell hardness 40C. Special hard coatings, including tungsten carbide and ceramic materials, are available as well. High-quality process compressors incorporate piston rods furnished with precision-controlled rolled threads (Fig. 2.44) that offer much greater fatigue strength over cut threads. API 618 also specifies the use of rolled threads.

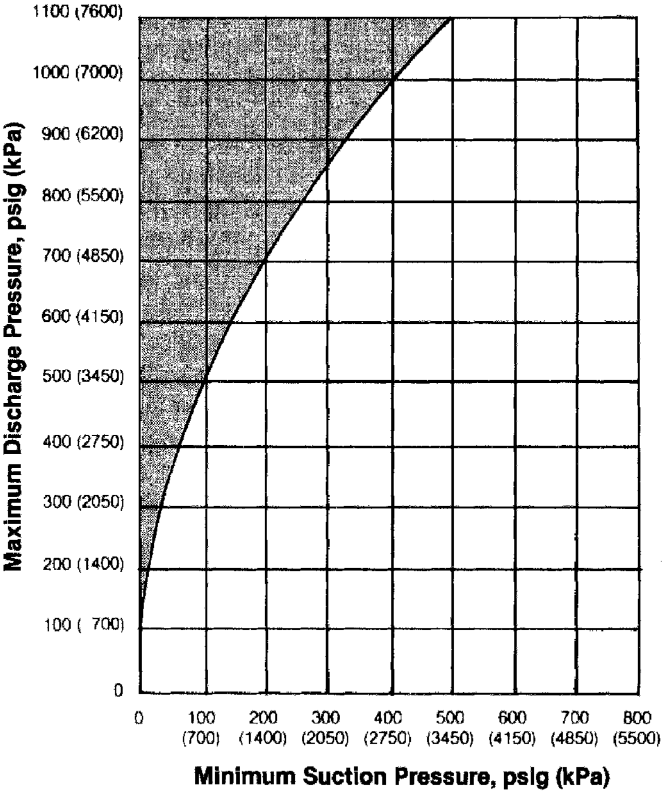

Present application range is represented below the curve.

FIGURE 2.40 Poppet valve application range. *(Cooper Cameron Corporation, Cooper-Bessemer Reciprocating Products Division, Grove City, Pa.)*

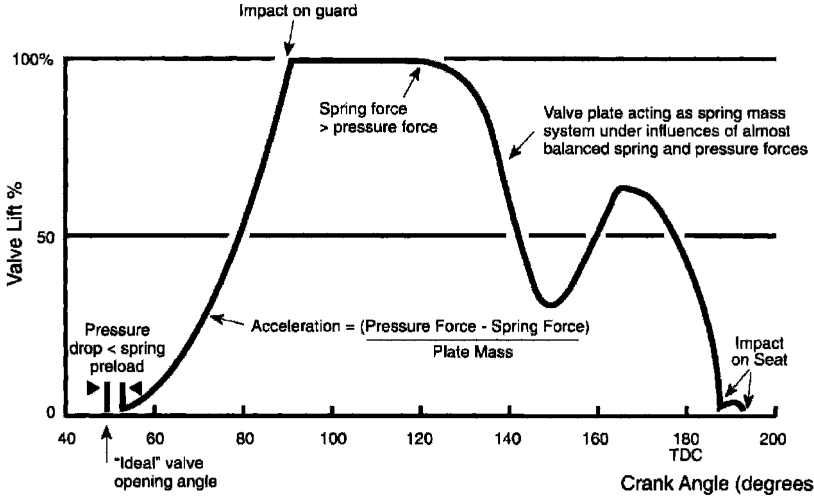

FIGURE 2.41 Basis of valve dynamics calculation. *(Dresser-Rand Company, Painted Post, N.Y.)*

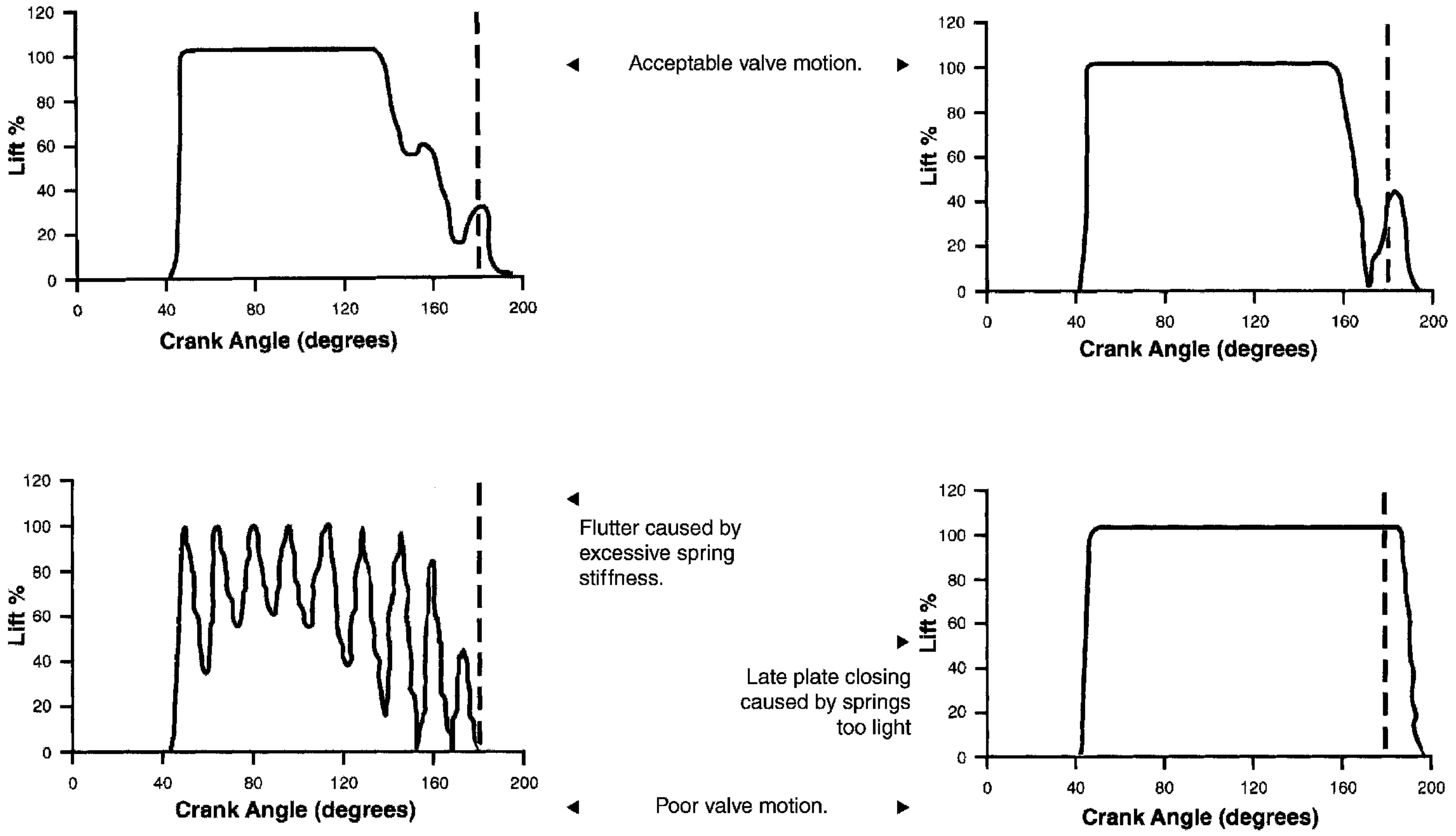

FIGURE 2.42 Acceptable and unacceptable valve motion illustrated on lift vs. crank-angle diagrams. *(Dresser-Rand Company, Painted Post, N.Y.)*

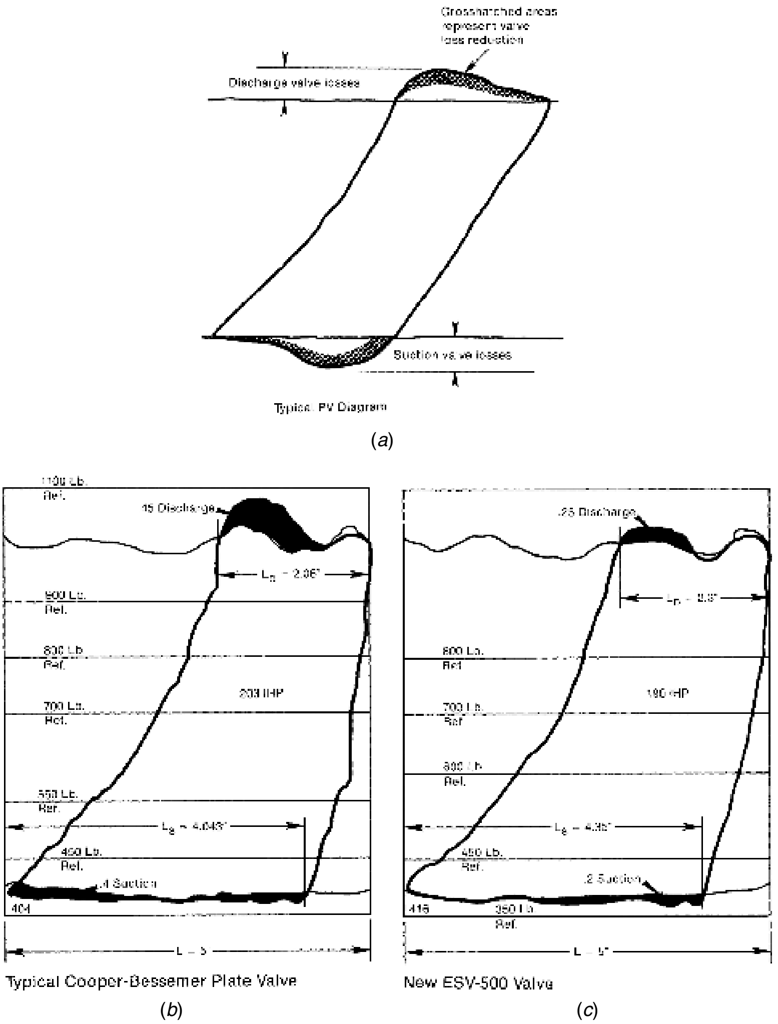

FIGURE 2.43 The p–V diagrams can reveal valve losses. Typical diagram (*a*) is compared to a traditional plate valve (*b*) and enhanced design (*c*). *(Cooper Cameron Corporation, Cooper-Bessemer Reciprocating Products Division, Grove City, Pa.)*

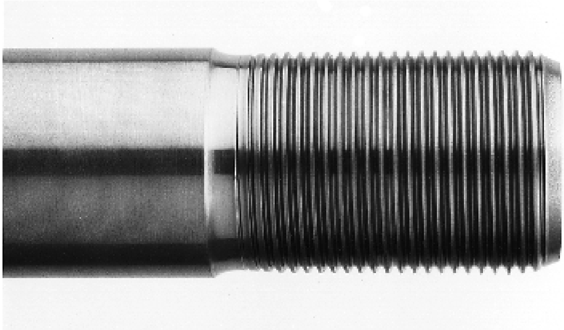

FIGURE 2.44 Rolled thread on a piston rod. *(Dresser-Rand Company, Painted Post, N.Y.)*

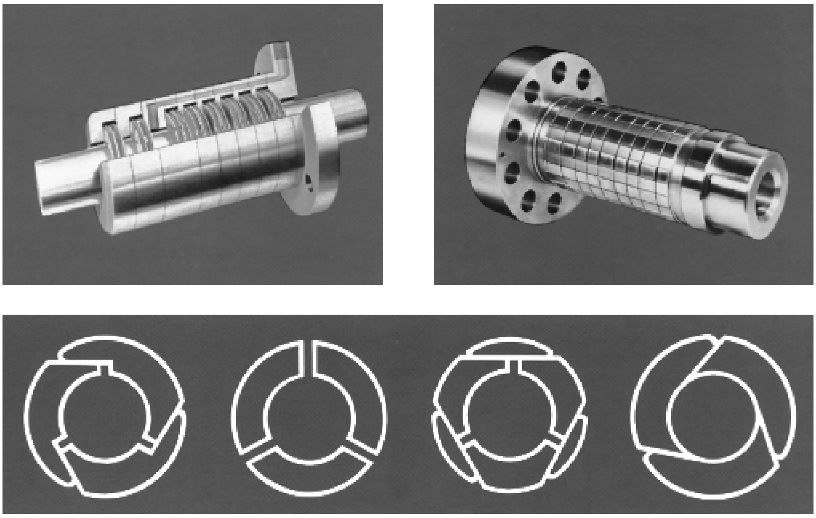

FIGURE 2.45 Packing cartridges and available arrangements. Single-, double-, radial-, or tangential-cut rings with passages for lubrication, coolant, and venting are provided, as required by the application. Surfaces are usually lapped. *(Dresser-Rand Company, Painted Post, N.Y.)*

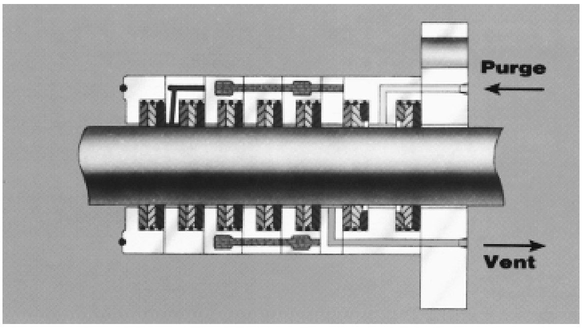

FIGURE 2.46 Lubrication and cooling passages on rod packing. *(Dresser-Rand Company, Painted Post, N.Y.)*

2.11 PACKINGS

Packings (Fig. 2.45) are required wherever piston rods protrude through compressor cylinders and distance pieces. Vented, full-floating, self-lubricating PTFE packing is standard and provides long-lasting operation with a minimum of gas leakage. One lubrication feed is common, but pressures over 150 atm absolute may have two feeds (Fig. 2.46). Many packing cases are also equipped with internal cooling passages. A typical self-contained cooling system for piston rod pressure packing is shown in Fig. 2.47.

2.12 CYLINDER LUBRICATION

Proper cylinder lubrication may greatly reduce compressor maintenance requirements. Cylinders are typically lubricated by a forced-feed lubricator system that is separate from

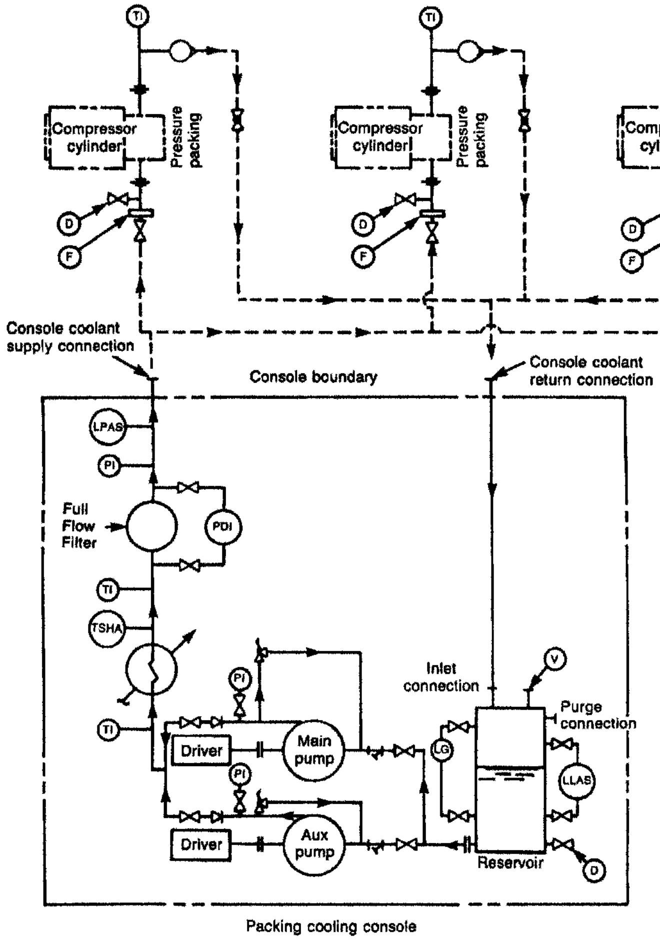

FIGURE 2.47 Typical self-contained cooling system for a piston rod pressure packing schematic, per API 618. *(American Petroleum Institute, Washington, D.C.)*

the crankcase system. The lubricator is normally crankshaft driven; however, motor drive is also available. Cylinders have at least one lubricator feed each in the top of the bore and in the packing. Large-diameter and high-pressure cylinders may have additional feeds in the bottom of the bore and packing. Each lubricator pumping unit delivers from 10 to 50 drops/min and has individual flow adjustment. The flow rate required can only be determined by experience and cylinder inspection on each application by checking that an adequate oil film exists in the cylinder.

The lubricant required for cylinders is a heavy well-refined oil, compounded with 5 to 10% animal fat if the gas is saturated. Diester synthetic lubricants are also extremely well suited for cylinder lubrication.

2.13 DISTANCE PIECES

Distance pieces are usually furnished as steel or cast iron castings or steel weldments. Distance piece geometry can vary to meet the application. The standard distance piece is a

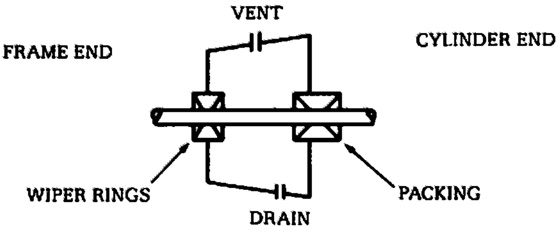

FIGURE 2.48 Single-compartment API standard distance piece for general compression applications. *(Dresser-Rand Company, Painted Post, N.Y.)*

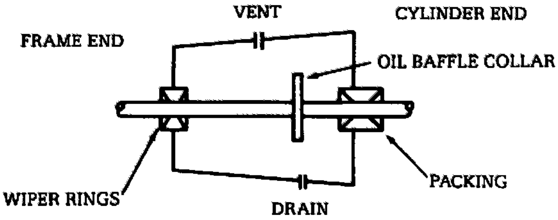

FIGURE 2.49 Extended-length single-compartment distance piece. No portion of the piston rod that enters the packing will enter the frame oil wiper rings. *(Dresser-Rand Company, Painted Post, N.Y.)*

single compartment with vent and drains (Fig. 2.48). The pressure packing is vented separately. All distance pieces typically have large openings with gasketed, gastight covers for ease of packing maintenance.

For nonlubricated or other services requiring an oil slinger, an extended-length distance piece is used so that no portion of the piston rod enters both the crankcase oil wipers and the cylinder packing (Fig. 2.49). The primary function of an oil wiper is to prevent loss of crankcase oil; it will not prevent gas from entering the crankcase.

For gases that could contaminate the crankcase oil or are hazardous, a two-compartment distance piece that has intermediate packing is recommended (Fig. 2.50). The cylinder-side compartment is vented to a safe area, and the crankcase-side compartment is normally vented to atmosphere or purged with nitrogen. An oil slinger may be located in this compartment. The packing vent and distance piece vent and drain manifolds should always be kept separate.

2.14 RECIPROCATING COMPRESSOR MODERNIZATION

Competent compressor manufacturers recognize the occasional need to modernize their proven heavy process reciprocating compressor line. These companies consider key factors such as manufacturing economics, reliability, and ease of maintenance during the design stage. The result can mean redesigned cylinders and improvements in frames and running gear, the crosshead, access opening in distance pieces, and hydraulic bolt tensioning. A modern compressor line is designed to meet the best current design practices, be easy to maintain, and be reliable and economical to manufacture.

Modern cylinder lines are analyzed using finite element analysis (FEA). Each cylinder model is strain-gauge tested to prove the FEA model, and selected cylinders are burst

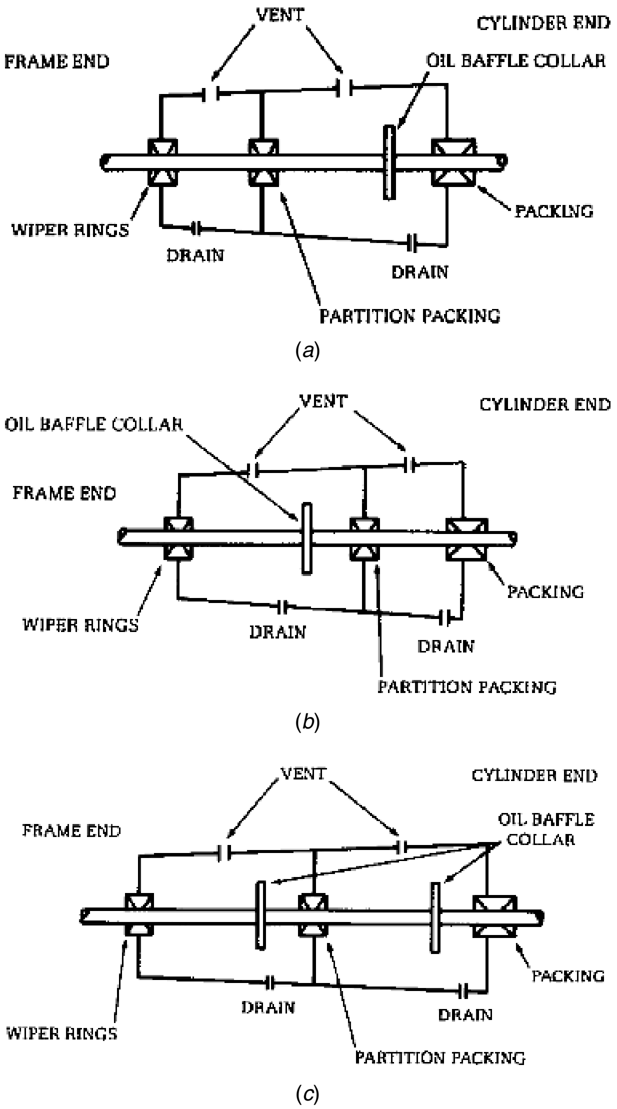

FIGURE 2.50 Two-compartment distance pieces with lubricated partition packing. Baffle collars at cylinder end (*a*), frame end (*b*), or both ends (*c*) prevent oil migration. Venting or purging of each compartment is possible. *(Dresser-Rand Company, Painted Post, N.Y.)*

tested. Standardization efforts demand that all cylinders within a rod load class have a common distance piece bolt circle. Occasionally, new distance pieces are designed, and these often have external bolting that can be tensioned easily.

Large access openings should be provided to simplify packing maintenance. Also, the distance piece should be very rigid to prevent cylinder alignment problems. The production of sound castings is of extreme importance and extensive cooperation is needed between the foundry and the manufacturing floor.

Improvements in the frame and running gear often lead to redesigned crossheads so as to eliminate the threaded connection between the piston rod and the crosshead. A flange design crosshead with hydraulically tensioned studs is used on certain piston rods, and the crosshead pin on all frame sizes is full floating for ease of maintenance. Crosshead materials should be castable and have both good ductility and excellent fatigue properties.

In general, the connecting rod pin bushing is grooved and the pin is nonrotating in the crosshead. This design provides good lubrication of the bushing and is quite tolerant of poor rod load reversal (e.g., due to a valve failure). Hydraulic tensioning should be standard on all but the smaller (1.25 in. and less) frame and cylinder bolting.

2.14.1 Cylinder Upgrades

Competent manufacturers occasionally redesign their lineup of process compressor cylinders for a number of reasons. They recognize that:

- Due to outdated design and frequently modified and worn-out wooden patterns, there occur significant casting quality problems, with high scrap rates on many patterns.
- High internal cylinder clearances will result in low volumetric efficiency.
- The older patterns and resulting castings may incur high costs.
- Older designs might be "unfriendly" to the user's maintenance crews (e.g., some internal bolting was difficult to reach and could only be tightened with "slugging" wrenches).

2.14.2 Design for Easy Maintenance

All cylinders within the same rod load class might use one API type C or type B distance piece. Not only do redesigned distance pieces have external bolting that allows for easy and accurate tightening of the bolts (designed to be tightened either by hydraulic tensioning, hydraulic torquing, or, if preferred, by Supernuts), but modern distance pieces are heavily ribbed for rigidity to minimize rod runout and cylinder vibration. Large access openings are provided for ease of packing maintenance; a fully assembled packing can be installed through the access openings. Figures 2.51 through 2.53 show a typical type C distance piece and how the same piece fits on a small cylinder (head inside the distance piece), medium-sized cylinder (sandwich head), and large cylinder (distance-piece bolts to the head and the head bolts to the cylinder).

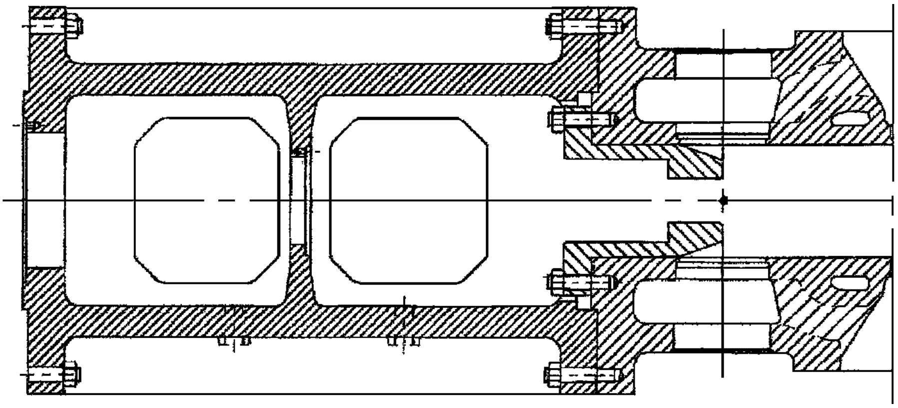

FIGURE 2.51 Distance piece with a small cylinder. *(Dresser-Rand Company, Painted Post, N.Y.)*

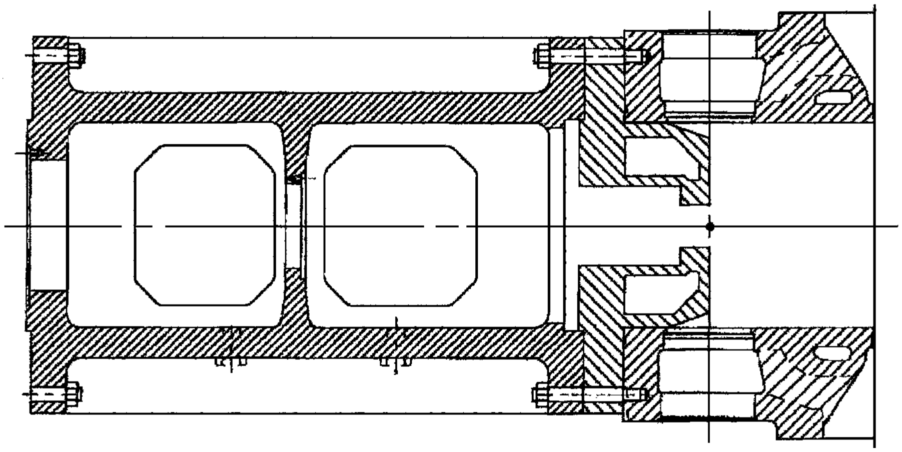

FIGURE 2.52 Distance piece with a medium-sized cylinder. (*Dresser-Rand Company, Painted Post, N.Y.*)

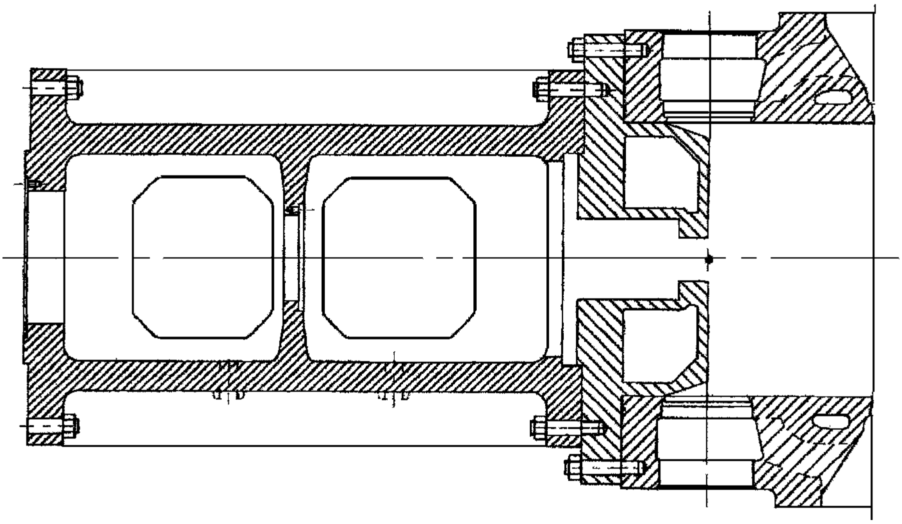

FIGURE 2.53 Distance piece with a large cylinder. (*Dresser-Rand Company, Painted Post, N.Y.*)

Cylinders are designed using normal calculation for hoop stresses and end wall stresses. Sample castings are burst-tested to hydrotest pressures 1.5 times the maximum allowable design pressure (MADP). In fact, one of the premier compressor design and manufacturing companies has verified burst pressures greater than four times MADP on many cylinders! The actual failure mode was achieved by yielding of the material, resulting in leaking at the test gasket joints.

Dresser-Rand verifies that the material properties in the critical section of their modern cylinders meet the minimum design requirements. They do this by utilizing "in mold" test bars on all sample castings and by machining tensile test bars and Charpy test bars from the critical sections on the two burst-test castings.

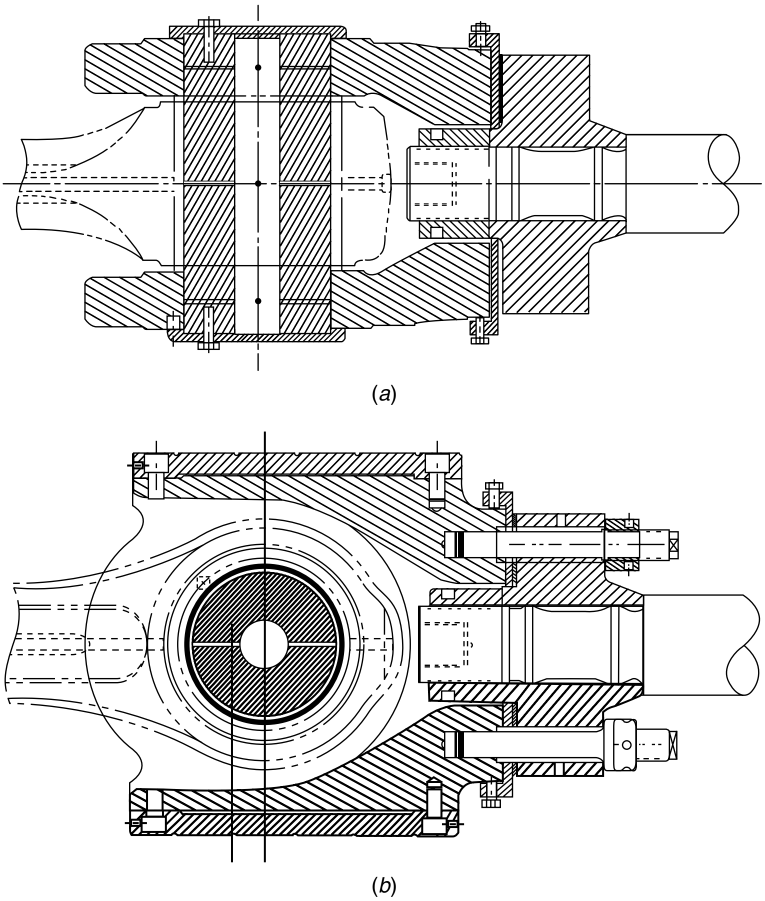

(*a*)

(*b*)

FIGURE 2.54 Flanged crosshead: (*a*) plan view; (*b*) front view.

2.14.3 Crosshead Designs and Attention to Reliable Lubrication

Modern machines with piston rods 4 in. or more in diameter often use a flanged crosshead design (see Fig. 2.54). The crosshead shown here has a round body with cylindrical shoes bolted to the crosshead with four cap screws. The shoes are shim-adjustable for adjusting the crosshead-to-guide clearance; modern crosshead pins are cylindrical and often full-floating for easy assembly. In general, pins are retained by caps at each end. There is an antirotation pin to ensure that it is the pin to the connecting rod bushing that acts as the bearing. The connecting rod bushing is bronze and has helical grooving to provide for lubrication under conditions of zero rod reversal (as is the case, for example, in the event of a valve failure).

Lubrication is accomplished by a "gun-drilled" oil passage through the connecting rod to the pin to lubricate the pin bushing and the pin-to-crosshead fit. Shoe-to-guide lubrication is by separate lube feed from the main oil header to the guide and by internal drilling in the guide to the shoe running surface.

Piston Rod-to-Crosshead Joint Note how the piston rod is necked down at the flange and the nut is hydraulically tensioned on the crosshead side to preload the joint. The flange is bolted to the crosshead using six hydraulically tensioned studs. There is an adjusting ring on the nose of the crosshead to allow the piston rod to be adjusted both vertically and horizontally. Piston rod runout is adjusted in this manner. A spacer is provided to adjust piston end clearance.

2.14.4 Materials

Many modern compressors use nodular iron for crossheads. Nodular iron is readily castable and sound-quality castings can be produced without resorting to the welding repairs that are typically required on cast steel. The proper grade of nodular iron (ASTM A536 60-40-18) has excellent fatigue strength for reliable operation. The carbon nodules tend to act as natural crack stoppers to prevent crack initiation and growth. Moreover, this material has good ductility. Other typical material selections include:

- *Crosshead pin:* alloy steel, surface hardened
- *Crosshead shoe:* cast iron with babbitt face
- *Connecting rod bushing:* bronze
- *Flange:* alloy steel
- *Studs:* ASTM A193 grade B7
- *Crankpin and main journal bearings:* aluminum with micro babbitt overlay

We are now ready to consider other aspects of reciprocating compressor technology in greater detail. Refer also to section 9.3, dealing with gas cleanliness issues that are applicable to all positive displacement compressors.

3

RECIPROCATING COMPRESSOR PERFORMANCE AND MONITORING CONSIDERATIONS

3.1 CAPACITY CONTROL

As already discussed, a reciprocating compressor is a positive displacement device. During normal operation it will take in a quantity of gas from its suction line and compress the gas as required to move it through its discharge line. Unlike centrifugal pumps, the reciprocating compressor cannot self-regulate its capacity against a given discharge pressure; it will simply keep displacing gas until told not to. This would not be a problem if we had an unlimited supply of gas to draw from and an infinite capacity downstream to discharge into; however, in the real world of refineries, chemical plants, and gas transmission lines, we find that we have specific parameters within which to work, and that capacity is a unique quantity at any point in time. Thus, we have a real need to control the capacity of the reciprocating compressor.

We also find that in most instances a reciprocating compressor needs to be unloaded for startup. Simplistically, it would seem that starting a positive displacement machine fully loaded would require a driver with 100% starting torque. However, what we find is that a reciprocating compressor can typically have a 3:1 peak-to-mean torque ratio. This peak torque requirement, coupled with breakaway friction, means that the driver now must have as much as a 350% starting torque capability. Again looking at the real world, we find that motors are designed to have 40 to 60% starting torque capability, thus necessitating an unloaded start. Additionally, we can convince ourselves that it is healthier for the compressor to start and continue running unloaded, to give the compressor time to warm up.

From basic thermodynamics and compression theory we know that there are equations describing the performance of a reciprocating compressor cylinder. The equations relate such

---

A Practical Guide to Compressor Technology, Second Edition, By Heinz P. Bloch

parameters as compression ratios, cylinder clearances, volumetric efficiency, and thus cylinder flow capacity. From our earlier discussion, we recall that

$$\mathrm{VE} = \eta_v = 100 - C(r^{1/k} - 1) \tag{3.1}$$

We can also draw a pressure–volume (*p–V*) diagram that visually gives us a feel for how the cylinder is operating. This was shown in Section 1.2. Referring back to this information allows us to understand how some of the capacity control methods work.

3.1.1 Recycle or Bypass

One of the simplest methods of controlling capacity is to recycle, or bypass, the compressed gas back to the compressor suction. This is physically accomplished by piping from the compressor discharge line through some type of control valve and going back to the compressor suction line. To reduce the flow to process, one simply opens up the bypass line and diverts the excess flow back to the compressor suction. In addition to being simple, this system has the advantage of being infinitely controllable (within the limitation of the size of the bypass line). Many, if not most process-type compressors have some sort of recycle line so that operators can fine-tune the flow to process.

A recycle system does, however, have shortcomings, the greatest being its inefficiency. Consider that we are taking gas at an elevated discharge pressure after having invested considerable horsepower in compressing it to that discharge pressure. Now we are going to expand it back down to the lower suction pressure simply so that we can invest more horsepower by compressing it again. As far as the compressor is concerned, it is always running at 100% load and is consuming 100% horsepower, even though the flow actually delivered to process could be a low percentage, or even zero. Another problem is in the actual design of the bypass line. The greater the percentage of bypass, the larger the piping has to be. In addition, depending on the particular gas characteristics, it may be necessary to include a cooler in the bypass line to dissipate the heat generated in compressing and continually recycling the gas. Also, consider the case of multistage compression where multiple bypass lines may be needed. The cost of installing an extensive bypass line could become prohibitive.

The most practical application for the bypass line is for small degrees of fine capacity control or for limited-duration startup unloading, where a simple loop around the compressor can be opened for a short period of time to relieve the initial compression load.

3.1.2 Suction Throttling

Although not used very widely, suction throttling is another method of controlling the capacity of a reciprocating compressor. The technique is to reduce the suction pressure to the compressor by limiting or throttling the flow into the cylinder. By referring back to our *p–V* diagram, we see that if all else is held constant, reducing the suction pressure creates a narrow card, indicating a lower volumetric efficiency and thus less flow. Additionally, the density of the gas will be reduced at this lower pressure, thus helping to reduce the mass flow delivered.

Suction throttling has its limitations. It takes a fairly dramatic reduction in suction pressure to give any sizable reduction in capacity. Additionally, as the suction pressure is reduced and the discharge pressure held constant, the compression ratio is increased. This causes higher discharge temperatures and higher rod loads.

3.1.3 Suction Valve Unloading

Probably the most common method of controlling compressor capacity is via suction valve unloading. The technique here is to physically keep the cylinder from compressing gas by maintaining an open flow path between the cylinder bore and the cylinder suction chamber. The cylinder will take in gas normally; however, instead of completing the normal cycle of compression and discharge, the cylinder will simply pump the gas still at suction pressure back into the suction chamber via this open pathway. There is absolutely no gas discharged to process. Additionally, since no compression is occurring, virtually no horsepower is consumed other than passageway losses.

There are three basic types of suction valve unloading. The first, and oldest, is the *finger-type unloader*, shown in Fig. 3.1. These unloaders consist of a series of small fingers that are housed in the valve crab assembly and actuated via a push rod from an outside actuator. To unload the valve, the fingers are lowered so that they depress the valve-sealing components and thus hold the valve in the open position. The pathway between the cylinder bore and the gas passage is then through these open suction valves. Finger-type unloaders will typically be mounted on each suction valve so that the flow area of the unloaded pathway is maximized. Also, since the fingers are simply holding open the existing suction valves, no special valve design is required. Actuation of finger-type unloaders can be manual using a handwheel and screw or lever arrangement to lower the fingers, or using a small air cylinder on the top of the unloader stem.

One of the biggest problems associated with finger-type unloaders is the potential for damaging the valve-sealing elements with the fingers. If one visualizes the force generated by pneumatically actuated fingers as they are driven down against the valve-sealing components, one can see how this could contribute to premature valve failure.

An alternative to the finger-type unloader is the *plug-type unloader* (Fig. 3.2). Here, instead of acting on the valve-sealing components themselves, we have a passageway bored through the middle of the valve. In normal operation this passageway is sealed with

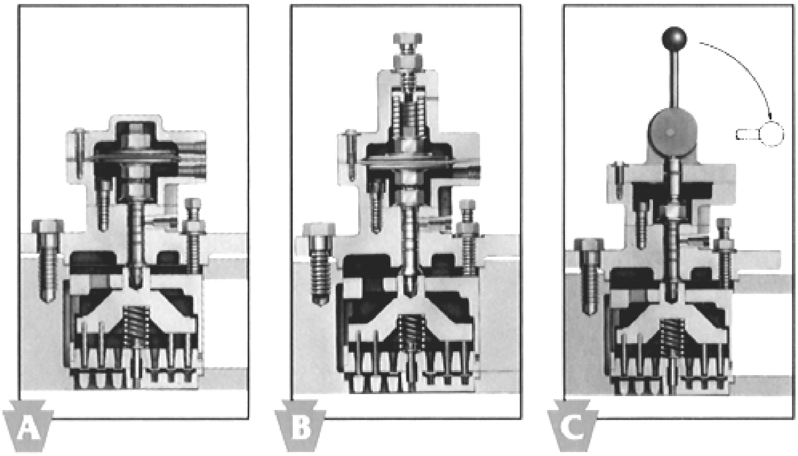

FIGURE 3.1 Finger-type unloaders, pneumatically operated: (A) direct-acting (air-to-unload); (B) reverse-acting or fail-safe (air-to-unload) which automatically unloads the compressor in the event of control air failure; (C) manual operation. *(Cooper Cameron Corporation, Cooper-Bessemer Reciprocating Products Division, Grove City, Pa.)*

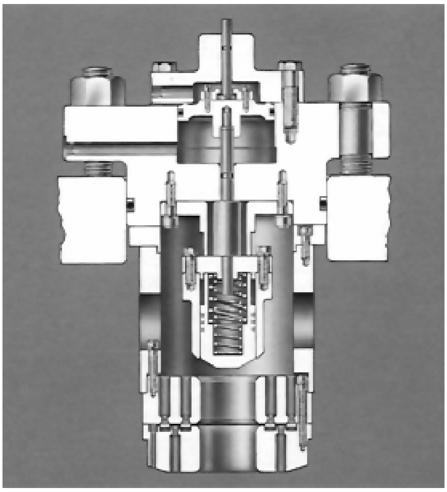

FIGURE 3.2 Outside operated plug-type unloader. Actuating air cannot mix with the gas being compressed. *(Dresser-Rand Company, Painted Post, N.Y.)*

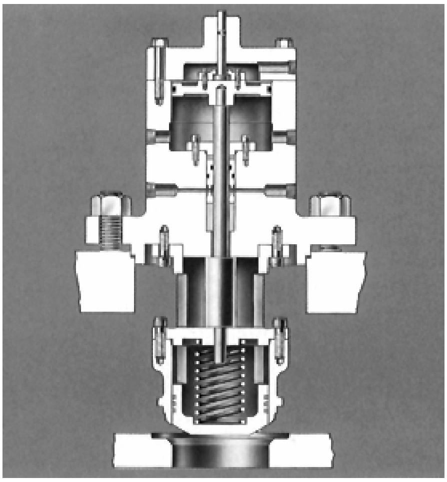

FIGURE 3.3 An outside-operated port-type unloader requires the use of only one unloading device per cylinder end and is typically used for lower-molecular-weight gases. Air cannot mix with the gas being compressed. *(Dresser-Rand Company, Painted Post, N.Y.)*

a plug. To unload the cylinder, we simply remove the plug and allow the gas to flow in and out of this passageway, with no compression taking place.

The plug-type unloader offers a major benefit over the finger-type unloader because it does not work on the valve-sealing components as does the finger-type unloader. However, since there is now a passageway through the center of the valve, we have reduced the normal effective flow area of the valve. In the case of a heavy gas, this could mean higher consumed horsepower because of the reduced valve flow area and increased pressure drop through the valve. Again as with the finger-type unloader, each suction valve would typically require a plug-type unloader.

The third type of unloader is the *port*, or *passage-type unloader* (Fig. 3.3). This type of device also uses a plug to seal the unloader passageway. However, instead of working in a passageway through the valve, the unloader uses a separate port between the cylinder bore and the gas passage. The port is created by removing one suction valve per cylinder end and replacing it with a large plug assembly. The port-type unloader has many advantages. The flow area of the passageway is large, since the plug is the full diameter of a normal valve rather than just a portion of the diameter. Moreover, when opened, the plug will lift from 1 to 2 in. off its seat. With only one unloader needed per cylinder end, the compressor incorporates fewer devices for maintenance purposes. Additionally, since a port unloader does not work on an active valve, it does not need to be removed for regular valve maintenance. Port unloaders are ideal for low-molecular-weight gas applications, where the total number of suction valves is typically reduced to improve pressure drop across the active valves.

Again, all valve unloader types can be manually operated or actuated by a pneumatic cylinder. When pneumatically actuated, these devices can be designed to load or unload upon either application or removal of air pressure. The advantages of pneumatic operation are the ability to control the capacity of the compressor remotely or even to automate this control.

Since suction valve unloaders keep compression from occurring, they control capacity in discrete steps. For example, a double-acting cylinder can be operated 100% loaded, 50% unloaded by unloading one end of the cylinder, or fully unloaded by unloading both ends of the cylinder.

An interesting alternative to these discrete steps of unloading is the stepless capacity control system offered by Hoerbiger compressor controls. This system uses finger-type unloaders that are pneumatically actuated. However, rather than keeping the valve unloaded continuously, the stepless system actually unloads the valve for only a portion of its stroke.

By allowing compression to occur during only part of the stroke, one obtains partial flow instead of full flow or no flow for a fully unloaded cylinder. Actuation of these unloaders is by a specially designed control panel that monitors process flow requirements and unloads the compressor as necessary. Because of its principles of design, this system is limited in turndown, and applications must be reviewed individually to confirm their suitability.

In general, suction valve unloading is an excellent method of controlling capacity. The devices are simple and easy to maintain and operate. They are efficient and are very good for startup unloading as the starting torque requirements are extremely low. Nevertheless, suction valve unloading does have some drawbacks.

If a cylinder is operated fully unloaded for an extended period of time, gas temperatures in the inlet passage will rise, since the same gas is being worked back and forth through the unloader passageway. This can become a problem, especially where the gas k value is high. The solution is to load the cylinder periodically so that the heated gas will be pumped to process and the cooler inlet gas stream will normalize the temperatures. Typically, this cyclic loading should occur for 10 minutes out of every hour of unloaded operation. This heating problem does not occur at 50% loads, since the active end of the cylinder will scavenge the heated gas and keep the stream of cool suction gas in the suction chambers.

Another area to be looked at when operating suction valve unloaders is the potential for a nonreversing crosshead pin load. For a given cylinder description, there may be conditions where unloading one end of the cylinder, typically the frame end, can cause a nonreversing load. This would prevent lubricant from flowing into the pin clearance. To guard against this, each mode of unloading should be studied for pin load reversal and any unacceptable operating modes highlighted to the compressor operator, or, in the case of an automated system, locked out of the unloader logic.

3.1.4 Clearance Pockets

Clearance pockets (Fig. 3.4) are also a common way of reducing the capacity of a compressor. From compressor theory, we know that the volumetric efficiency of a cylinder is dependent on its clearance or nondisplaced volume. We again recall that

$$\mathrm{VE} = \eta_v = 100 - C(r^{1/k} - 1) \tag{3.2}$$

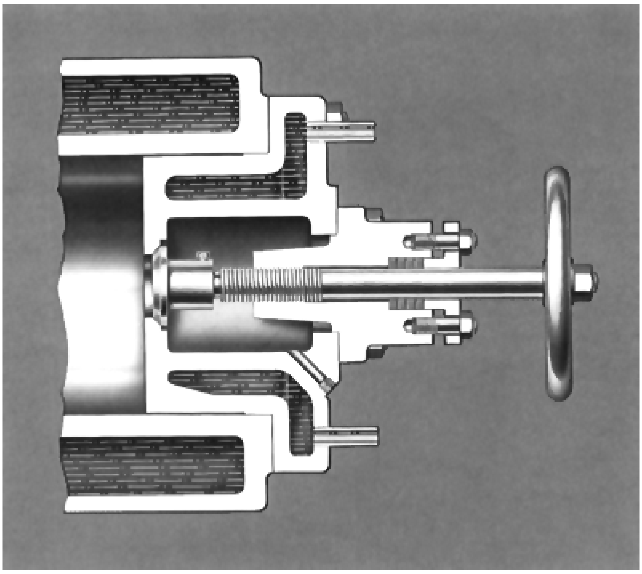

FIGURE 3.4 Manual fixed-clearance pocket valve is generally located in the outer head of a cylinder, as shown. This type of control is used for applications that require limited and infrequent capacity changes. *(Dresser-Rand Company, Painted Post, N.Y.)*

This equation illustrates that as clearance is increased, the volumetric efficiency decreases, thus reducing the amount of flow to process. It should be noted here that the degree to which the volumetric efficiency is affected by increased clearance is governed by the compression ratio of the service. In practical terms we see that when the compression ratio is 2.5 or higher, an increase in clearance will actively reduce the volumetric efficiency. However, for ratios of 2.0 or less, it takes a fairly major increase in clearance for any reasonable reduction in volumetric efficiency. As a generalization, clearance pockets are ineffective and not useful with low compression ratios (1.5 or less).

The design of a clearance pocket is simple and can be visualized from Figs. 3.4 and 2.22. It is essentially an empty volume, typically in the outer head of the cylinder, with a valved passage to the cylinder bore. During normal operation, the valve is closed and the cylinder operates at full capacity. For reduced-capacity operation, the valve is opened and the cylinder capacity is reduced by the effect of this added clearance on the volumetric efficiency. Typically, clearance pockets are of a fixed volume and sized to reduce flow precisely to a predetermined level. It is not uncommon to use multiple fixed-volume clearance pockets to allow for numerous discrete reduced-capacity control steps.

For example, a large cylinder may be executed with two fixed-volume clearance pockets, one small and one large. Using the small and large pockets independently and then together, one can obtain three reduced flow modes of operation from two clearance pockets. It is also possible to put clearance pockets on the frame end of a cylinder so that many different clearance volume combinations are feasible. Fixed-volume clearance pockets, just as valve unloaders, can be actuated manually or pneumatically.

Figure 3.5 depicts an option available with clearance pockets. Instead of executing them with a fixed volume, they can be configured for a variable volume. A variable-volume

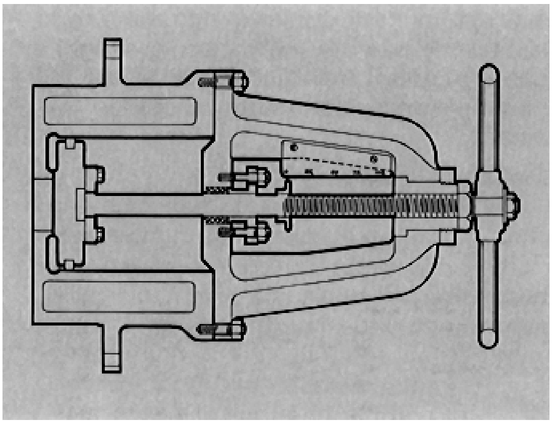

FIGURE 3.5 Manually controlled variable-volume clearance pocket. This clearance pocket provides capacity reduction in an infinite number of steps over a given range. This pocket can also be automatically actuated by a hydraulic system that varies the position of the piston in the pocket. *(Dresser-Rand Company, Painted Post, N.Y.)*

clearance pocket is typically mounted on the outer head of a cylinder and is basically a cylinder itself with a piston moved back and forth to increase or reduce the volume of the pocket. An advantage of the variable-volume clearance pocket is that instead of having fixed steps of unloading, stepless turndown is achieved simply by adjusting the pocket. This is particularly useful in meeting ever-changing process conditions, since the pocket can be adjusted in the field as required. Historically, variable-volume clearance pockets have been actuated manually by means of a very large handwheel to move the piston back and forth. When the correct volume is achieved, the pocket can be locked in place by means of a second locking wheel.

The handwheel method sounds fine until one considers the force against the pocket piston created by the process gas pressure inside the cylinder. At times it might take the strength of two operators to turn the handwheel and adjust the pocket. Also, as corrosion or deposits are formed from the process gas, the piston may tend to stick in one position and may no longer be useful for adjustment.

An improvement over the manually controlled pocket is the hydraulically controlled variable-volume clearance pocket. Here, the manual handwheel has been replaced by a hydraulic cylinder. The cylinder is coupled directly to the pockets piston and uses hydraulic pressure from a support package to move the piston back and forth. Not only can the hydraulic cylinder create a higher force than the typical field operator, but it also allows the pocket to be automated so that the pocket will adjust itself to field conditions.

All of the capacity control methods described so far have assumed that the compressor is running at a constant speed. Since the reciprocating compressor is a positive displacement device and does not rely on sophisticated gas dynamics for its compression, it is possible to vary the speed to adjust the throughput directly. One typical variable-speed driver is the steam turbine. Whenever steam is economically available in plants, it is not uncommon to have a large steam turbine coupled to a reciprocating compressor through a gear speed reducer. By varying the speed of the turbine, the capacity of the compressor can be controlled directly. However, because of the complexity of the drivetrain (large flywheel, soft couplings, multireduction gearboxes) the system is limited in its turndown by torsional problems.

Typically, a turbine gear drive arrangement is limited to a ±10% speed variation. Operation outside of the approved speed range could lead to massive failure of the drive system. New technology makes it feasible to use variable-speed ac motors for running compressors. (Dc drive systems have been available for some time but are limited to low-horsepower applications.) Modern control technology allows ac motors of all sizes to operate with fully variable speeds. However, since this technology is relatively new to the reciprocating compressor industry, there are still a number of questions to be addressed: torsional response; pressure pulsations at reduced rotative speeds; feedback into the electrical grid due to torque pulsations from the compressor; economic feasibility; whether variable speed should be employed analogous to bypasses in the past (i.e., simply to trim flow between major steps of operation). All these areas need to be considered before variable-speed ac motors are specified as drivers for reciprocating compressors. As of 2005, economic and reliability concerns were too formidable to allow large reciprocating compressors to be operated at variable speed.

3.2 MORE ABOUT CYLINDER JACKET COOLING AND HEATING ARRANGEMENTS

During their normal compression cycle, reciprocating compressor cylinders typically generate considerable amounts of heat. The heat comes from the work of compression plus the friction of the piston rings against the cylinder wall. Unless some of this heat is dissipated, undesirably high operating temperatures will occur. Most cylinders intended for process gas operation are designed with a jacket (shown in Figs. 2.20 through 2.22) to allow this heat to be removed by some cooling medium.

There are a number of advantages in dissipating this heat.

1. By lowering the cylinder wall operating temperatures, one can reduce losses in capacity and horsepower due to the suction gas being preheated by warm cylinder gas passages. The cooler the inlet gas, the denser it is, and greater mass flow per unit volume will result. Removing heat from the gas during compression lowers its final discharge temperature and reduces the power required for compression.
2. Dissipating the heat from the cylinder and reducing the inlet gas temperature creates a better operating climate for the compressor valves, yielding longer valve life and reduced formation of deposits.
3. A jacketed cylinder filled with coolant will maintain a more even temperature throughout the cylinder and reduce hot spots, which could cause uneven thermal expansion and undesirable deformation of the cylinder.
4. A lower cylinder wall temperature leads to better bore lubrication. Lubricants will break down less on a cool wall than they would on a hot wall, and better lubrication leads to extended ring life and less maintenance.

However, care is needed not to reduce the cylinder operating temperatures too much. Consider the problems created by introducing a warm saturated gas into a cylinder with cold metal sections. Condensation will occur in the bore; thus, washing the lubricant from the cylinder walls will cause accelerated wear of the piston and rider rings. Even worse, a large quantity of condensed liquid could collect in the inlet gas passage and be introduced into the cylinder as a slug of liquid. This could lead to at least broken valves and perhaps a broken cylinder. To avoid this condensation problem, it is considered good practice to use a cylinder coolant temperature approximately 6°C (10°F) warmer than the inlet gas temperature.

3.2.1 Methods of Cooling

When evaluating a process compressor for cooling, a cylinder will fall into one of four general categories.

1. *Noncooled.* For a cylinder operating in cryogenic service where gas temperatures are typically below −60°C (−75°F), no cooling is required. In fact, no cooling medium is suitable for providing uniform, acceptable cylinder temperatures. For applications like these, cylinders are often designed with no cooling jacket at all and will simply be insulated from the ambient air in an attempt to avoid severe temperature differentials or frost formation on the cylinder exterior.

2. *Static cooling.* Static cooling is used for applications where gas discharge temperatures are below 88°C (190°F) and mean temperatures are low [below 60°C (140°F)]. This type of cooling is also used where there will be no unloaded cylinder operation that could create abnormally high temperatures.

In a static system the cylinder water jacket is simply filled with a cooling medium such as a water–glycol mixture. No attempt is made to circulate the mixture. A small reservoir vented to atmosphere is provided to allow for thermal expansion.

3. *Thermosyphon cooling.* A cylinder may be thermosyphon-cooled where discharge temperatures are moderate [88 to 90°C (190 to 210°F)], mean temperatures are in the range of 60 to 66°C (140 to 150°F), and where there will be no extended periods of fully unloaded operation that could increase operating temperature. This cooling method was illustrated in Fig. 2.32.

A thermosyphon system is similar to the static system; however, there is now a small section of pipe connecting the top cooling medium outlet to the bottom of the cylinder. The idea here is that as the warm water in the radiative sections cools, it will flow to the bottom of the cylinder, creating a slight circulation through the cylinder jackets.

4. *Full-circulation cooling***.** For applications where gas mean and discharge temperatures are in excess of the previously stated limits or where extended periods of fully unloaded operation are anticipated, the cylinder requires that a coolant be circulated through its jacket to dissipate the heat buildup. This was discussed previously (see Fig. 2.31).

For large process cylinders, it is common to have water-cooled cylinder heads as well as a jacket around the cylinder bore. These sections are connected by external jumper pipe. As mentioned earlier, the temperature of the coolant should be controlled so that it is maintained approximately 6°C (10°F) higher than the gas inlet temperature. In addition, the flow should be controlled so that the temperature rise across the cylinder circuit is between 3 and 11°C (5 and 20°F). Flow through a cylinder is controlled by means of a globe valve on the discharge of the jumper piping around the cylinder. It is customary to throttle the coolant outlet to ensure that the cylinder is constantly flooded with coolant. A thermometer and sight flow indicator are located immediately upstream of the discharge globe valve to assist the operator in adjusting the coolant flow to maintain the correct temperature rise across each cylinder.

In calculating coolant flow required for a given cylinder, we find that the coolant temperature rise across the cylinder and the coolant flow rate are inversely proportional. In other words, a high flow rate of water will pick up only a slight increase in temperature. Conversely, a slow trickle of water will rise appreciably in temperature. In optimizing the balance of flow rate and temperature rise, it is important to remember to keep temperature rises moderate [3 to 11°C (5 to 20°F)]. This will ensure a fairly even cylinder temperature and will keep the flow rate within certain limits. Too low a flow rate will allow silt or other entrained particulates to drop out in the water jacket, eventually leading to a blockage of flow. On the other hand, too high a flow rate can create a prohibitively high pressure drop through the coolant circuit. Typically, velocities between 4 and 8 ft/s based on the size of the coolant jumper pipe have been used as guidelines.

Actual calculation of coolant flow is, at best, an estimate based on empirical formulas and, at worst, a black art. An old rule of thumb for determining coolant flow in gpm is to divide cylinder horsepower by the allowable temperature rise. This method is simple but neglects accounting for most of the critical parameters. Coolant temperatures, gas temperatures, cylinder size, and frictional factors are all important parameters in calculating cylinder coolant flow requirements. Calculation methods today are based on empirical formulas that use these parameters and have been found to have good field correlations.

Untreated water can be used, provided that the temperatures are acceptable and that the water is filtered before it goes through the cylinder jackets. Nevertheless, refineries typically use cooling tower water, which is temperature controlled, filtered, and treated. Coolant discharging from a shell-and-tube intercooler is a good source of coolant since it has been preheated by the compressed gas stream. This should reduce the risk of incurring moisture condensation and liquid slugging.

The ultimate source of coolant is from a closed cylinder jacket coolant console dedicated specifically to an individual compressor. Figure 3.6 depicts such a console. The system can be tailored specifically to the compressor in question. Motor-driven pumps (main and backup) provide circulation. Coolant temperature can be kept high enough by the use of a reservoir heater, kept cool enough by a shell-and-tube or radiative-style cooler, and controlled by an automated temperature control circuit. Instrumentation is added to monitor and protect the system.

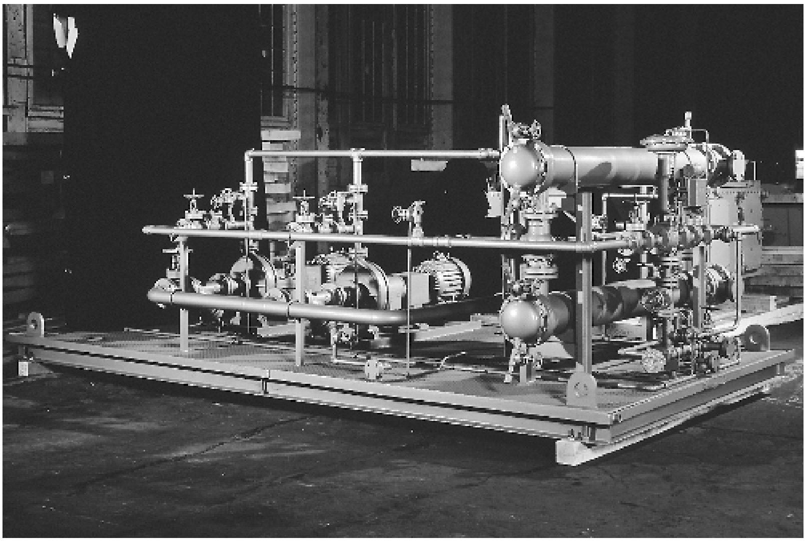

FIGURE 3.6 Packaged jacket water cooling system. *(Dresser-Rand Company, Painted Post, N.Y.)*

3.3 COMPARING LUBRICATED AND NONLUBRICATED CONVENTIONAL CYLINDER CONSTRUCTION

One of the major areas of motion, and thus wear, in a reciprocating compressor is in the cylinder. Considering that during a year's normal operation a piston travels nearly 100,000 miles in the cylinder bore, it can be seen that cylinder lubrication merits closer investigation.

3.3.1 Lubricated Cylinder Designs

Probably 80% of all process reciprocating compressor cylinders are lubricated. Lubricating the cylinder bore makes sense. It reduces friction between the piston rings and the cylinder bore, thus reducing frictional heat and wear of both cylinder bore and piston rings. It lubricates the cylinder valves, helping them to survive the 100 million + cycles they go through in a year's operation. A film of lubricant in the cylinder also helps protect the cylinder components from the effects of corrosive gases.

When using lubricated construction, cylinder designers use the lubricating film to the best advantage. Because the sliding surfaces will be lubricated, harder piston and rider ring materials can be used. Typical materials of construction would be glass and/or molybdenum-filled Teflon (PTFE). Because of its relative hardness, this material has excellent durability, and when lubricated, the wear characteristics of both rings and bore contacted are excellent. Carbon- or graphite-filled PTFE, which has become a rather universal ring material, is also frequently used in lubricated service. Since the piston will be riding on a film of lubricant, the piston can be relatively heavy. It should be noted that although lubricated construction allows a piston to be run directly in the cylinder bore, it has become common practice in the process compressor industry over the past decades to design pistons with rider bands (shown in Figs. 2.33 and 2.34), supporting the pistons in the cylinder bore.

Rider bands can be considered as an expendable support shoe for the piston. As wear occurs, the ring could be readily replaced. For lubricated designs, rider band bearing loads are typically in the 8- to 10-psi range when considering a contact area of 120° of arc.

Piston rod packing rings would also be made of glass and/or molybdenum-filled PTFE for lubricated service. Again, this relatively hard compound shows excellent durability and wear characteristics in lubricated service, without being excessively abrasive to the piston rod surface. As with the piston and rider rings, carbon- or graphite-filled PTFE is also commonly used.

Because the compressor cylinders are operating at elevated pressure, the lubricant must be pumped into the cylinder in a controlled manner. There are a variety of cylinder lubricators designed precisely for this purpose. The most common style of cylinder lubricator is the pump-to-point lubricator (Fig. 3.7).

Pump-to-point lubricators are designed with a fabricated steel box serving not only as the main body of the system, but also as the lubricator sump. Through this box runs a multi-cammed shaft that is driven either by the compressor crankshaft or by an electric motor. The actual pumping units are located on top of the box. The units are equipped with a suction straw that drops into the sump and a follower that rides on the cams to actuate the pumping plunger. On top of the pumping units is a transparent cap that allows observing the lubricant as it is drawn up through the suction straw and drips down to be pumped to the cylinder. Counting the frequency of drops facilitates monitoring of lubrication flow rates (Fig. 3.8).

A cylinder typically has multiple points of lubrication. As illustrated in Fig. 2.29, there may be several feeds in the main bore, depending on size and pressure. There could also be several feeds in the packing case, and sometimes a feed in a partition packing. Each point

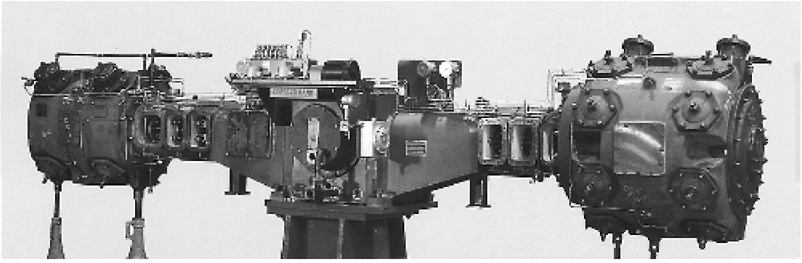

FIGURE 3.7 A pump-to-point lubricator mounted at the center of the frame supplies different amounts of lubricant to the packing and cylinders. *(Dresser-Rand Company, Painted Post, N.Y.)*

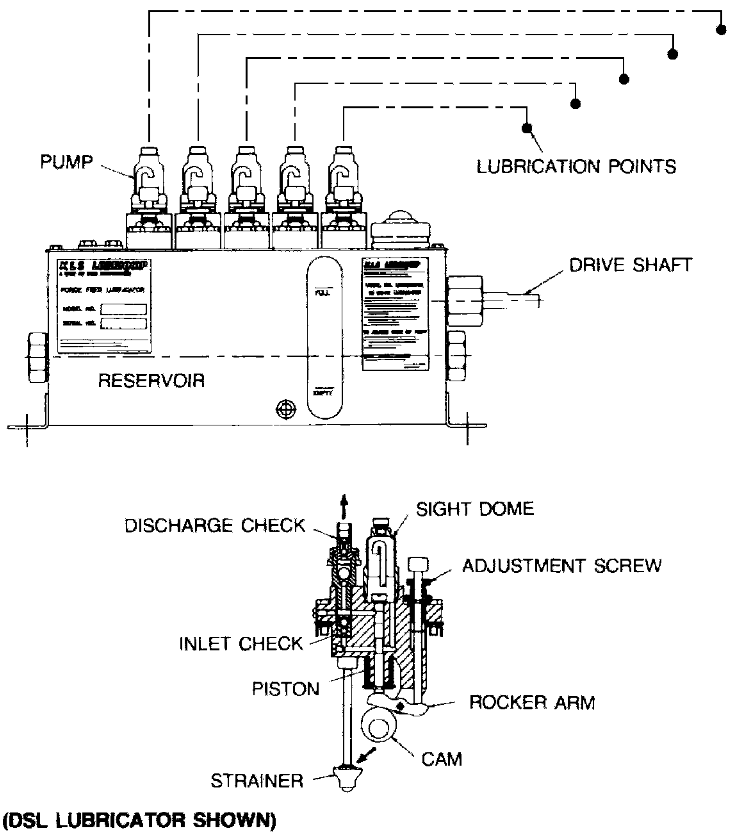

FIGURE 3.8 Pump-to-point lubricator. *(Lubriquip, Inc., Cleveland, Ohio)*

of lubrication is fed by an individual pump from the lubricator, which is why this style is called a *pump-to-point lubricator*. The advantage of using a pump-to-point lubricator is that each pump is adjustable individually. Distribution of lubricant to different areas in the cylinders can thus be tailored to best suit the lubrication requirements.

The other major style of lubricator is the *divider block lubricator* (Fig. 3.9). Divider block lubricators incorporate a single high-pressure injection pump feeding a number of

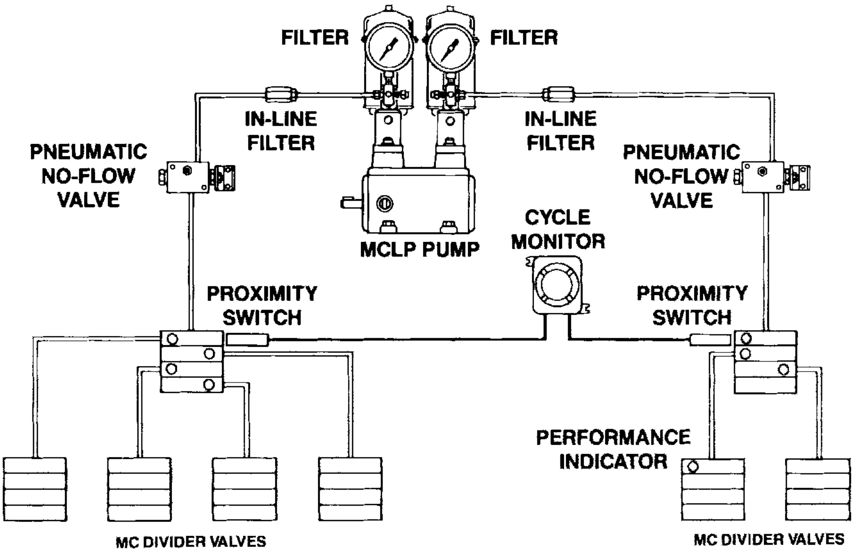

FIGURE 3.9 Divider block lubricator system. *(Lincoln Division of McNeil Corporation, St. Louis, Mo.)*

divider blocks, also referred to as *splitter blocks,* or *divider valves.* The function of a divider block is to divide the flow of lubricant from the pump into multiple streams of various predetermined proportions so that each point can be fed an appropriate amount of lubricant. This style of lubricator is popular because, once constructed, the proportion of flow from the divider blocks is fixed and cannot get out of adjustment in the field. Moreover, divider block lubricator arrangements are easily instrumented to annunciate deficiencies in any point being lubricated. This must be attributed to the cascading motion of the divider blocks, which are interconnected through ports, thus requiring that each block deliver its portion of lubricant before the next block functions.

Should any individual point become clogged or blocked, all oil flow would stop. A single no-flow switch can thus be used to monitor all lubrication points. Additionally, there are cycle monitors that can be used to monitor the rate of cycling of the blocks. If for some reason the blocks take too long to cycle, indicating a reduced flow rate to the cylinder, this device can sound an alarm. One of the disadvantages of divider block lubricators is the difficulty in field-adjusting the differently proportioned flow amounts. Such adjustments may become desirable whenever substantial differences exist in cylinder pressure levels.

3.3.2 Nonlubricated Cylinder Design

There are some processes that will not tolerate oil entrained in a gas stream. Oil separators can be installed in the compressor discharge lines; however, sometimes these are not effective enough for the level of cleanliness required, or there may be safety problems associated with a particular gas contacting the lubricant. In such cases, the only alternative is to use nonlubricated cylinder designs. Probably 20% of all process gas compressors are designed for nonlubricated operation because of process demands. Oil in the gas stream could lead to catastrophic problems in an oxygen compressor or even in a high-pressure air compressor. Also, many chemical processes cannot tolerate the existence of lubricant in their catalysts.

Special consideration must be given to nonlubrication applications. Without an oil film, piston rings do not seal in the cylinder bores as efficiently, thus causing blowby in the cylinder, resulting in a lower delivered gas flow from the cylinder. There are certain operational limits that must be addressed. At higher operating gas pressure, piston rings have much greater force against cylinder walls, thus creating greater wear problems. Except for special applications, nonlubricated construction is limited to pressures below 2000 psi.

Without the lubricating film to reduce wear, we must change out piston ring materials. Typically, a nonlubricated piston or rider ring is made from carbon- or graphite-filled PTFE. The carbon or graphite filling gives it a measure of lubricity. Carbon- or graphite-filled PTFE is also a little softer and less abrasive in cylinder bore contact than is glass and/or molybdenum-filled PTFE. For applications with very dry gases, Morganite Graflon compounds have proven to be very good. For oxygen applications, copper-filled PTFE is used, replacing lead-filled rings due to the environmental problems associated with lead. The oxygen atmosphere causes the copper-filled rings to form a copper oxide layer that gives them a natural lubricity similar to the carbon or graphite filling. Copper filling is preferred over carbon filling because it is less active in an oxygen atmosphere. Of course, this is where noncontacting, labyrinth piston design excels. This is discussed later.

For conventional nonlubricated designs, the cylinder designer must address bearing load in the cylinder. Without the advantage of the lubricating film, the designer must reduce the bearing load on the rider bands typically to 3 to 5 psi, by reducing the piston weight or increasing the rider band area.

Piston rod packing designs for nonlubricated construction will also differ from those used in lubricated construction. Typical ring materials are again a carbon-filled PTFE material. Because of the additional frictional heat generated between the nonlubricated rings and the piston rod, it is wise to have a cored packing case and circulate coolant through it at pressures above 250 psi. In some cases, it may also be necessary to include bronze backup rings in the packing case to aid in heat transfer from the rod into the packing case and cooling media.

3.4 COMPRESSOR VENT AND BUFFER SYSTEMS

Whenever a moving surface must be sealed against a pressure differential, one must expect leakage. In a reciprocating compressor, this leakage typically occurs at the piston rods. Even with state-of-the-art multiring packing cases, it is likely that process gas operating at hundreds or thousands of psi will leak from cylinders past the rod packings. Since this process gas is typically hazardous, flammable, or even toxic, it is certainly undesirable and often illegal simply to allow the gas to leak into the atmosphere. It is thus necessary to capture this leakage gas.

Normally, a packing case will have a vent connection piped from between the last two rings in the packing case (Fig. 2.46). This connection not only serves as a vent to remove gas before it is leaked into the cylinder distance piece but also serves as a drain for excess cylinder lubricating oils. This is why packing vents should always be piped to a point below the piston rod. These vent connections can be piped to a flare stack or gas recovery system or back to gas suction if the pressure is low enough.

Venting the packing case will not, however, give completely ensure against the leakage of gas into the cylinder distance piece. To prevent this gas from leaking into the compressor frame, where it can cause damage to the frame end running gear, cause an explosion, or simply leak to the atmosphere through the frame breather, it is customary to vent the distance piece to a flare stack or recovery system. A more conservative approach is to use a two-compartment distance piece where the cylinder end compartment is buffered with an inert gas and the frame end compartment is vented to flare (Fig. 2.50). By pressurizing the cylinder end compartment to a higher pressure than the flare stack, any leakage past the rod packing will be by the inert gas leaking toward the packing vent rather than the process gas leaking out of the packing case into the distance piece. The vented frame end compartment ensures that no gas will leak into the frame.

In cases where it is imperative to capture as much leaking gas as possible, one can use the same type of purge and vent system in the packing case itself. This was illustrated in Fig. 2.46. Here a buffer of inert gas is introduced between the last two rings in the packing case and vented between the second- and third-to-last packing rings. Since the last several rings in the packing case are now at a very reduced pressure level, one can no longer rely on the gas pressure to adequately seal the rings against the rod and packing case. This problem can be alleviated by using mechanically loaded ring sets in the last two packing cups.

The question of where to vent the leakage is best answered by the end user. Nonhazardous, nonflammable gases may be allowed to leak directly to atmosphere. Some compressors will have a simple gooseneck on top of the distance piece vent connection or use louvered covers on the distance piece doors to allow ambient air to purge any leakage. The most obvious vent destination for a flammable process gas is the flare stack. Flare systems typically run at pressures between 5 and 15 psig. For higher-pressure systems it may be necessary to put an additional sealing ring at the end of the packing case beyond the vent to help encourage the gas leakage to run into the high-pressure flare header instead of into the distance piece and then to the atmosphere.

The most economical place to which to vent is the first-stage suction of the compressor. The process gas leakage is thus recovered and put back into the process. Discretion must be used in taking a packing vent to suction. If suction pressures are much above 25 or 30 psig, it may create a major problem for the packing case. This case would now possibly experience pressurization of the midportion with 30-psig gas, and this might compromise its sealing capabilities.

3.5 COMPRESSOR INSTRUMENTATION

The area of compressor design that offers the greatest degree of freedom and personal input from the equipment specifier is instrumentation. Since compressor instrumentation does not contribute directly to the pumping duty of the machine, it is often neglected or overlooked. The amount of instrumentation on a given unit can range from a few simple pressure and temperature gauges to sophisticated electronic or computer-based systems. Even more important is the possible integration of monitoring and analysis tasks into the process control computer. See Section 3.6 for additional data.

As we analyze this subject, we find that instrumentation serves three basic purposes: to monitor, to protect, and to diagnose. Monitoring instruments are the most basic. They are the gauges, or readout devices, that allow operators to examine the compressor and its process and to determine whether the unit is functioning properly. It is important to install monitoring instruments for all parameters critical to the operation of a compressor.

Protective devices are those that alert operators to an upset condition or keep the compressor from destroying itself. Should operator oversights occur, the compressor protective devices will shut the unit down before the problem reaches disastrous dimensions.

Diagnostic instruments are those that monitor various parameters, integrate their findings, and make a diagnosis as to the health of the compressor. Diagnostics determine not only whether the compressor is running properly or has failed; they also predict an approaching failure or operational problem. Used properly, diagnostic instrumentation helps schedule maintenance shutdowns rather than having the compressor trip unexpectedly.

Reciprocating compressor instrumentation generally covers the following parameters.

1. *Pressure.* Since the basic function of a reciprocating compressor is to elevate gas pressure from one level to another, pressure would appear to be the most basic parameter to look at. For monitoring purposes, the simple pressure gauge tells us at a glance exactly what we need to know. Pressure gauges should have large-diameter dials so that they are easily read. As with any instrument, the scale on the gauge should be selected so that under normal operating conditions, the pointer is approximately midrange. As with all pressure instruments, pressure gauges should be provided with an isolation valve to facilitate replacement or servicing.

Pressure switches are an important component of any instrumentation system. Whenever pressures go beyond the normal operating limits, the pressure switch can activate an alarm, protective shutdown, or both.

Many different pressure switch designs are available: single-pole, double-throw; double-pole, double-throw; single-level switches; multilevel switches; dual switches in a single housing; internally adjusted; externally adjusted; factory adjusted. A typical switch should be constructed ruggedly of materials suitable for the application and should be listed and approved for operation in the area classification for its installed environment. An internal adjustment is convenient to allow for field readjustment in case of changing pressure conditions and to prevent accidental misadjustment from inadvertent outside contact.

Conventional switch logic is to have the contacts normally closed in operation and open for alarm or shutdown actuation so that if the field lines are ever accidentally cut, the circuit opens, the machine shuts down, and the unit will not run without protection. Pressure switches should be installed with suitable block and bleed valves. This allows the switch to be blocked out and bled down so that its set point can be verified. Normally, a pressure gauge or connection for a gauge will be piped next to the pressure switch to assist in calibration.

2. *Temperature.* Temperature is as important as pressure in most processes. A 4½-in. dial-type thermometer is the common temperature indicator for the process industry. When measuring a fluid temperature, it should be installed in a thermowell of suitable material. Thermometers with flexible head mechanisms (every angle design) are convenient because they allow the thermometer face to be adjusted for ease of viewing.

Another method of monitoring temperatures is via a thermocouple or *resistance temperature detector* (RTD). This allows the temperature to be monitored at a remote location on a readout device. Thermocouples and RTDs can also be useful as sensors for protective circuitry. Instead of a monitoring instrument, or perhaps being included in a monitoring instrument, an RTD is a comparative circuit that compares the actual input from the thermocouple to a preset level. When this level is reached, a signal is sent to the alarm or shutdown circuitry to alert operators to the problem.

A more common approach to abnormal temperature protection is a filled capillary temperature switch. Here a gas-filled probe is used to sense the temperature being monitored. The probe is connected to the switch assembly via a protected stainless steel capillary. As the temperature changes, the gas in the probe and capillary expands or contracts, sending a proportional signal back to the switch. When the signal causes the switch to exceed a preset level, a contact is activated. With a filled capillary type of temperature switch, the switch housing itself is normally mounted away from the monitoring point, making it easier to wire and protecting it from vibration or abuse. Capillary lengths are typically 8 to 10 ft. They can be made longer, but 25 ft is probably the upper limit to ensure accuracy and responsiveness.

3. *Vibration.* Because of its design, a reciprocating compressor is subject to vibration. Reciprocating masses, reversing loads, and pulsating gas streams all contribute to the normal vibration level on a compressor. However, if this normal level is exceeded, it indicates that something abnormal is happening and should be investigated. Typical sources of abnormal vibration are pistons hitting a cylinder head from misadjustment or debris in the cylinder, a failed component in the drivetrain, or even an acoustical vibration being transmitted through the gas pipe into the compressor. Any of these sources can have a detrimental and even catastrophic effect on the compressor. To protect against damaging the compressor, many reciprocating compressors have a vibration switch mounted on their frame.

Vibration switches have typically been the mechanical (spring or magnet) type, where increased vibration causes a switch element to be released from the magnet holding it, thus activating the alarm. The setting of these switches is often the subject of considerable debate. Although certain guidelines can be set up to predict how many *g*'s are acceptable and what level is unacceptable, the best way to protect a compressor is to set the switch sensitivity in the field. The highest normally anticipated operating vibration is typically the jolt of the main drive motor starting, or changes in flow rate or flow direction of process gas streams. In recent years, the considerably greater level of sophistication employed in centrifugal compressor technology has touched the field of reciprocating compressor vibration monitoring. Accelerometers, seismic instruments, and noncontacting shaft vibration probes are now available that have enhanced sensitivity and are well suited for the diagnosis of reciprocating machines.

4. *Flow.* It is often advantageous to monitor gas flow in compressor installations. Small gas flows can be monitored using a simple rotameter. Liquid flows are typically indicated by pinwheels or flapper-type sight flow indicators. Major flows such as process gas flows are typically monitored by means of a calibrated flow orifice and its associated instrumentation.

Flow orifices are normally located in the downstream piping. Protection is generally for loss of flow of a critical fluid. The protective devices are almost always based on loss of pressure against a calibrated orifice, which then triggers a pressure switch.

5. *Liquid level.* Monitoring of liquid levels is done with liquid-level gauges. For small reservoirs vented to the atmosphere, such as a compressor crankcase or cylinder lubricator reservoir, a simple protected transparent plate or tube attached to the side of the reservoir is normally acceptable.

For pressurized applications, such as a separator or knockout drum in the gas stream, a more rugged type of gauge is required. Armored reflex or transparent liquid gauge glasses are designed to take the high pressures, mechanical vibrations, and physical abuse seen in a typical plant environment. These glasses should be isolated from their reservoirs by block valves so that the gauge glass can be removed for maintenance or replacement without depressurizing the reservoir. If required, these gauge glasses can be fitted with illuminators to allow viewing in low-light conditions. Two basic switch types are available for abnormal liquid-level protection. The first, a *displacement-type level switch,* uses a float that is raised or lowered by the liquid level in the switch standpipe. When this float goes above or below its set limit, it trips a switch, normally by using a series of magnets. Because this system uses a rising or falling column of liquid, there must be two connections to the switch: one for liquid flow, the other for pressure equalization. As with liquid-level gauges, this liquid-level switch should have isolating valves.

The other type of switch uses a variable capacitance principle. This solid-state instrument has a single probe, normally made of stainless steel or coated with an inert material, that is inserted through a single connection into the reservoir. As the liquid level moves along the probe, the electronic circuitry senses a change in the capacitance of the probe. From this changing capacitance, it determines how much of the probe is being contacted. By mounting the probe vertically in the tank, the switch can monitor the changing level of the liquid and compare it to a preset level. When the liquid reaches this level, a signal can be sent to activate an alarm or shutdown. The advantages of this type of switch are that it requires only a single connection into the reservoir and that it can monitor the liquid level continuously. Additionally, multiple-level alarm points can be set. Another advantage is that solid-state electronics are less sensitive to vibration than are positive displacement switches. If necessary, the probe can even be remotely mounted in a tank and the electronics portion housed in another area.

Another necessity for level protection is *active control* of the liquid level in a separator sump or knockout drum, rather than reling on operator monitoring and manual intervention. There are automatic traps available that monitor liquid level with a float that is linked to a valve mechanism. When the level in this trap gets too high, the float will open the drain valve and keep it open until the float drops to a lower limit. Because these traps are large and heavy, they must be remotely mounted below the sump or knockout drum so that the liquid flows down into them. There also must be a pressure equalization line between the trap and the drum.

Although these automatic traps are functional and self-contained (no external power required), they do have limitations. The valve linkage mechanisms are subject to fouling by lubricating oils or other sludge that may form in the liquids. Location of the traps and routing of the associated piping can be cumbersome, particularly for connecting to suction dampener or separators. Additionally, because these automatic traps are typically made of castings, they are limited in their pressure containment capability, and many users will not allow them in process plants.

An alternative to mechanical traps are electromechanical systems. These systems use a liquid-level switch as described previously, to energize a solenoid-actuated drain valve. When the liquid level reaches a predetermined high point, the switch makes contact, opening the solenoid drain valve. As the liquid is drained (typically, through an orifice, to control the flow rate), the liquid level is lowered until it reaches a low-level set point in the switch. Now, the switch signals the solenoid valve to close, and the cycle is ready to repeat. Regardless of which automated system is used, it is wise to retain manual draining capability.

Having reviewed what instrumentation is available and what kind of parameters to instrument, we need to determine which critical systems merit this instrumentation. Again, since the main purpose of the compressor is to compress gas, the gas system is an obvious choice to instrument. Gas pressure and temperature are important to monitor at both suction and discharge for each stage of compression. Most process applications include a high-temperature alarm switch in the discharge gas stream for each stage. If there is more than one cylinder per stage, the discharge temperature will be monitored and alarmed for each cylinder discharge. Since the discharge pressure of each stage is normally protected by a pressure relief valve, high-pressure discharge switches are seldom seen. However, low first-stage suction pressure switches are not uncommon and can help to keep from overloading a compressor due to low suction pressure or, in essence, excessive differential pressure.

Mechanically speaking, probably the most important system to the compressor itself is the frame lube oil system. Here the most critical parameter is, of course, oil pressure fed to the main bearings. Standard instrumentation would include a pressure indicator for monitoring the pressure, as well as low-pressure alarm and shutdown switches for protection of the frame and running gear. If an auxiliary lube oil pump is supplied, the low lube oil pressure alarm switch can be wired to sound the alarm and start the auxiliary pump simultaneously. The shutdown switch is normally set a nominal 5 psi below the alarm switch. Should the pressure continue to degrade after alarm activation, the compressor will be shut down before damage is done to the bearings.

Other lube oil systems instrumentation will normally include pressure indicators at the discharge of all oil pumps, temperature indicators monitoring oil temperatures in and out of the oil cooler, a differential pressure gauge, and perhaps even a differential pressure switch around the oil filters giving indications as to how dirty the filter is and whether it is starting to restrict flow. In some cases, an oil temperature alarm switch is furnished downstream of the oil cooler. Indications of high oil temperature might point to the oil viscosity becoming too low for long-term dependable operation. A liquid-level gauge glass and sometimes a level switch are installed on the frame that acts as the oil reservoir for the compressor. Temperature monitoring of the bearing surfaces is very useful on reciprocating compressors. Thermocouples or RTDs in the bearing caps to monitor main bearing temperatures are not uncommon on large reciprocating process compressors. Thermocouples can also be used in crosshead guides and motor bearings.

Protecting the crankpin or crosshead pin bearings is more difficult. Here, a eutectic device is occasionally installed at the back of the connecting rod bearing cap or in the crosshead pin. The eutectic device contains a fusible element designed to melt at a predetermined temperature and a spring-loaded pin that pops out when the predetermined temperature is reached. When these pins pop out, their motion trips a strategically placed *flapper valve,* venting an auxiliary manifold that, in turn, trips a pressure switch.

Cylinder lubricant is another critical fluid for the compressor that should be instrumented. For a normal pump-to-point lubricator, lubricator drive failure and low reservoir level can be monitored readily. To do this, the manufacturer often adds an extra lubricating pump to the box and pipes it to a pressure switch. This additional pumping unit has a shorter suction straw than that of the other pumps in the box. The theory here is that if the drive system for the lubricator fails, this extra pump, along with all the other pumps, will cease to function; thus, the pressure switch will lose pressure and activate an alarm. Additionally, as the level in the lubricator reservoir drops, this extra pump will be the first to starve. This would also activate the alarm, while the other pumps would continue to supply lubricant. With a divider block lubricator, it is practical to include a pressure indicator in the discharge line from the main pump. A no-flow switch indicating lack of flow from the entire block system can be included on one point. Cycle monitors are available that can monitor the rate of cycling of the divider blocks. To help diagnose failures, each feed point from the various divider blocks can be equipped with a pin indicator so that if an individual line is blocked, the pin will indicate which line caused the shutdown.

Other systems and types of instrumentation are sometimes selected. Rod packing thermocouples and RTDs are not uncommon. Sensing of temperature excursions here can indicate that the packing rings are worn or on the verge of failure. Also, rod drop indicators are becoming more popular in the industry. Their purpose is to monitor the position of the piston rod relative to the packing case, to give an indication of how the wear or rider bands in the cylinder are degrading. As the wear bands become thinner, the piston drops in the cylinder; thus, the rod drops relative to the packing case.

At least two styles of rod drop indicators are available. The contacting type requires that the rod drop down, contacting a soft metal cap over a pneumatic line mounted at the bottom of the packing case flange. As the rod rubs off the soft metal cap, air escapes from the pneumatic line, thus venting pressure from a switch, which in turn activates an alarm.

There is also a noncontacting style or eddy-current device. In this system, a small probe is mounted on the packing case flange over the piston rod. The probe emits an electronic signal, and by evaluating the change in interference with this signal created by changing proximity to the rod, an electronic circuit determines the probe-to-rod distance. By knowing the initial clearance between the probe and the rod and the allowable wear of the rider band, calculating and presetting alarm points is possible. The advantages of this system include elimination of wear-prone contact between the sensing element and rod in the packing travel area. Also, eddy-current devices facilitate continuous monitoring of rider band wear rates.

3.5.1 Electric vs. Pneumatic Switches

A point made earlier was that any electrical switch must be certified for operation in a particular atmosphere. This normally does not present a problem since most switches on the market carry the requisite approval for typical refinery atmospheres. There are some cases, however, where switches are not available for the proper atmosphere or where there is a question of suitability between the electrical device and the medium being instrumented. This is generally where pneumatic switches find application.

Pneumatic instruments do not encounter problems with area classifications or intermittent power availability. Pneumatic systems can also be used for remote indication of parameters by use of a pneumatic transmitter. It is not uncommon to use pneumatic transmitters for remote indication of pressure in hydrogen gas or lubricating oil systems. Obviously, the routing of tubing carrying a flammable gas or fluid into a control panel or control room would be considered hazardous.

3.5.2 Switch Set Points

In determining set points for various protective switches, it is necessary to examine the safety and reliability philosophy of a given plant. In some cases, operating personnel want to be alerted to the fact that there is an upset condition, as with the typical alarm switch. In an oil system, for example, one may set the low oil pressure switch at 25 or 30 psig, low enough to indicate there is a problem that merits operator attention but still within acceptable operating limits. A shutdown switch, on the other hand, needs to be set specifically to protect the equipment from damage. Again, in the case of a typical lube oil system, the low-pressure shutdown switch would be set for 12 to 15 psig. Below this pressure, continued operation could cause damage to the bearings or crankshaft.

It is customary for an equipment manufacturer to suggest set points for switches supplied on a compressor. However, many times these will need to be modified in the field to reflect actual compressor operation.

3.5.3 Control Panels

Most process compressors have associated with them some sort of control panel. This can be a master panel in the control room that monitors several of the critical parameters of the compressor, or it can be a dedicated panel standing adjacent to the compressor.

A dedicated panel will normally include everything required to control that compressor. It will have stop–start buttons for the main drive motor as well as switches to control electric lubricators, electric heaters, and auxiliary pumps for prelubrication or main pump backup. The panel may include various pressure or temperature gauges so that the operator can monitor the compressor and its processes from the panel rather than walking around the compressor. Main motor ampere meters may also be on this panel. One of the major features of a dedicated control panel is an annunciator that will be connected to the various switches on the compressor. As the switches send their signals, the annunciators will sound alarm horns and display what malfunction is occurring. As a shutdown signal is received, the annunciator will shut the compressor down and then indicate what caused the shutdown. Compressor capacity can usually be selected from the panel. This can be done manually by turning a multiposition switch or pressing a series of buttons, or even a pair of raise or lower buttons. Operation at a particular compressor capacity step would be displayed on the panel. Capacity control could also be automated in the panel by means of suction or discharge pressure monitors and a logic system set up to load or unload the compressor as required to maintain a given suction or discharge pressure.

Panels often include programmable controllers and minicomputers. These can be used to control the loading of a compressor or handle many other decision-making tasks. One of the newer developments for control panels is using minicomputers for compressor diagnostics. Here, the computer monitors various parameters on the compressor and forms a database, or operating history. The computer can then look for combinations of values or rates of change in values that help identify an impending failure before it occurs. A typical example of this is the monitoring of valve temperatures.

Monitoring the operating temperature of valves through the use of thermocouples in the valve chambers makes it possible to record the temperature history of each valve throughout the operation of the compressor. If the computer notices an individual valve getting hotter than the average of the other valves or observes the rate of change in temperature increasing, it can alert the operator. This indication of impending valve failure allows the operator to schedule a maintenance shutdown instead of waiting for the valve to disintegrate and potentially damage the compressor.

3.5.4 Valve-in-Piston Reciprocating Compressors

A rather interesting variation of the conventional reciprocating compressor is marketed by Dresser-Rand. Using frames in the 500- to 2000-kW size range, with speeds of 1800 rpm and strokes ranging from 3½ to 5 in. (89 to 127 mm), *valve-in-piston* (VIP) *cylinders* (Figs. 3.10 and 3.11) are available for a number of services. As a point of interest, smaller valve-in-piston machines were used in refrigeration service many decades ago.

The gas compression principles in the VIP cylinder are very straightforward. Two inlet or suction valves are stationary and mounted directly in opposite ends of the cylinder bore. The discharge valves are dynamic and mounted on the piston rod (Fig. 3.10).

As the discharge valves move toward the outer end, the frame end suction valve opens, allowing incoming gas to flow into the void created by the movement of the discharge valve. At the other end, the discharge valve opens as the gas is compressed against the outer end suction valve. Gas flow is direct and simple.

The valves used in the VIP compressor are the same mass-dampened ported-plate PF-style valves used in Dresser-Rand gas field compressors. The VIP cylinder (Fig. 3.11) is a one-piece cast high-strength double-acting cylinder. Basically, this design eliminates the conventional piston because it is both a valve and a piston.

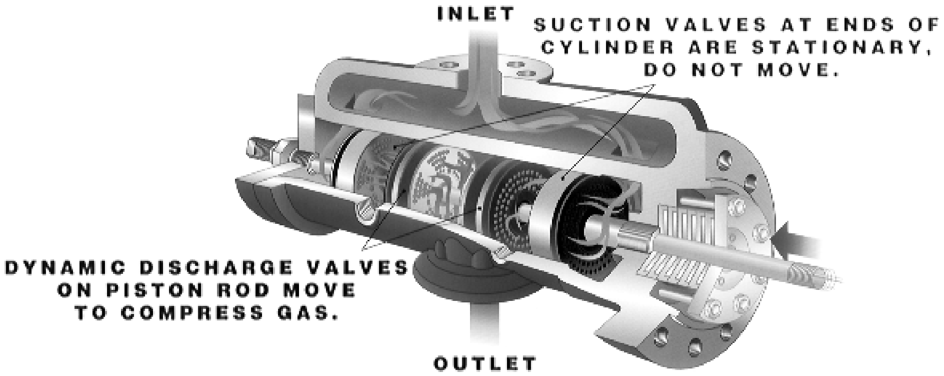

FIGURE 3.10 Valve-in-piston (VIP) compressor cylinder. *(Dresser-Rand Company, Broken Arrow, Okla.)*

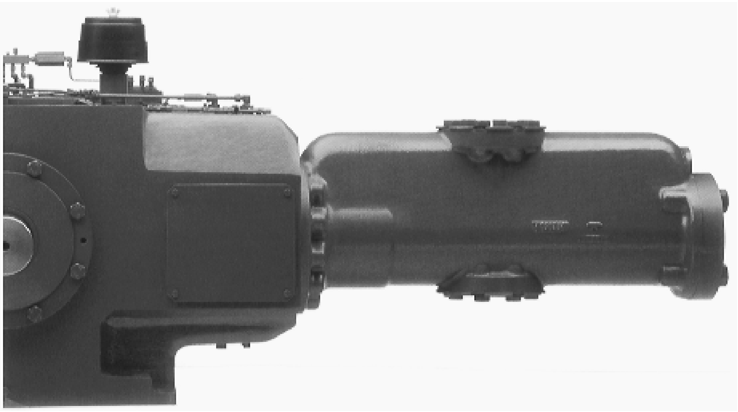

FIGURE 3.11 Conventional compressor frame with unconventional valve-in-piston (VIP) cylinder. *(Dresser-Rand Company, Broken Arrow, Okla.)*

3.5.5 Barrel-Frame Reciprocating Compressors

A departure from traditional reciprocating compressor design is shown in Fig. 3.12 and 3.13. Cooper Compression developed machines with a cylindrical frame structure that eliminates the multiple-tie-bar concept typically found in conventional machines. The cylinder bolts are accessible from the outside of the barrel frame. Compressor bolting tightness is more easily verifiable without necessitating removal of crosshead guide side covers. The stiffer cylindrical frame also eliminates the need for separate support of the crosshead. Quite obviously, a barrel-frame machine can be made for less and saves space as well. By adding a spacer module between two-throw sections, the manufacturer also achieves four- and six-throw machines.

As a concluding note, both VIP and barrel-frame machines are used in upstream oil production operations. Time will tell if they are chosen for downstream processing as well.

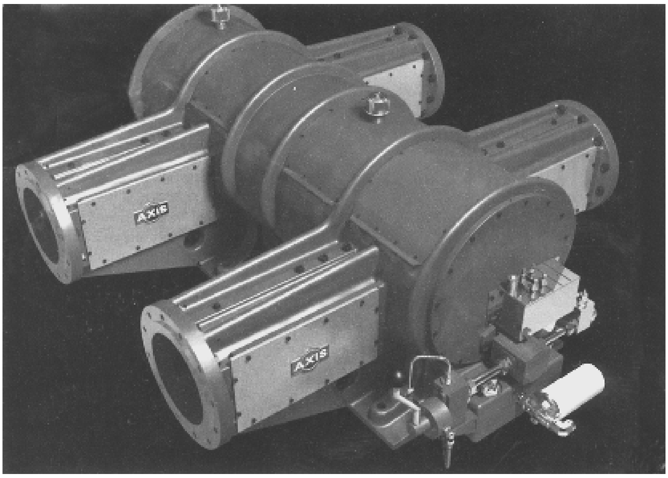

FIGURE 3.12 Barrel frame with integral distance pieces. *(Cooper Compression, Houston, Tex.)*

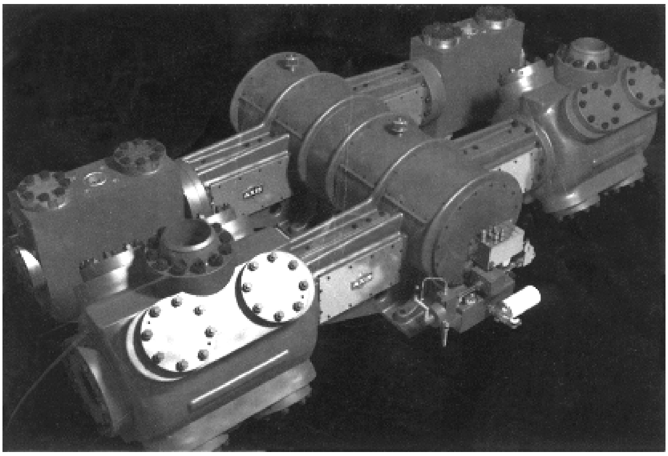

FIGURE 3.13 Barrel frame reciprocating compressor, four-throw version. *(Cooper Compression, Houston, Tex.)*

3.6 CONDITION MONITORING OF RECIPROCATING COMPRESSORS*

Over the years, electronic measurement instruments and analyzers have been used increasingly in condition monitoring and performing maintenance work on machines in industrial facilities. It would be fair to say that in the late 1970s, the "screwdriver behind the mechanic's ear" method was replaced by the piezoelectric accelerometer and the digital FFT (fast Fourier transform) analyzer.

Initially, simple data collection with manual assessment played the lead role. But progress was rapid and advances in the field of sensor technology and electronic data capture followed

---

*Contributed by Prognost Systems GmbH, Rheine, Germany. With special thanks to Thorsten Bickmann and Eike Drewes.

quickly. Indeed, many scientific analytical methods are now available to a wide spectrum of users involved in maintenance and reliability engineering. As an example, a range of well-known procedures for condition analysis (e.g., fast Fourier transforms) is still integrated in this effort and has certainly made it easier for the user to diagnose equipment condition.

Economic reasons prompted condition monitoring instrument developers initially to focus on the large turbomachinery market. This market, of course, addresses the needs of turbines and dynamic compressors. For condition assessment and monitoring of reciprocating compressors, special and segmented analyses were developed later. They had to meet the special requirements imposed by the unique and well-known characteristics of reciprocating machines.

Ever-increasing demands on the availability of machines resulted in a change from periodic (off-line) to continuous (online) condition monitoring. With the major expansion in digital process control systems and local area networks, networkable integrated analysis systems are needed today. These must collect electronically measured data covering the entire compressor. Moreover, these devices must often be able to present the data to a group of maintenance engineers via central visualization monitors. Those responsible for maintenance can now use their workplace computers to access the monitoring system directly through a networkable visual display. With expanding possibilities in telecommunications and increasing business automation, remote monitoring is fast becoming the standard in condition monitoring.

Suffice it to say that condition monitoring of reciprocating compressors has firmly established itself in modern maintenance engineering.

3.6.1 Maintenance Strategies

The requirements imposed on modern condition monitoring are essentially prescribed by four technical and economic objectives:

1. Machine monitoring to ensure the safety of the plant
2. Avoidance of production downtime from unscheduled shutdowns; hence, targeted planning of maintenance and shutdown events
3. Optimal use of the known or measurable wear potential of engine parts (condition-based maintenance)
4. Efficiency monitoring

Depending on the machine's production environment, these four principal aims may well demand different priority rankings. Quite evidently, operational safety will play a more important role in a 2.5-MW hydrogen compressor than it would in a 150-kW air compressor. In contrast, keeping maintenance cost to a minimum is probably the more important objective in the small air compressor case.

3.6.2 Justification for Machine Monitoring

Continuous operational condition monitoring implies that machine condition data are collected and evaluated in real time. Of special interest here are data that could rapidly change and are telltale signs of unexpected degradation of the condition of the machine. Vibration amplitude excursions indicate rapid changes and will give an early warning of disaster. A timely shutdown will minimize possible consequential damage and the resulting extended downtime.

Avoiding production downtime due to unscheduled shutdowns saves money. Along with the direct expense of a maintenance procedure (e.g., material and labor costs), machine stoppage can cause production interruptions and downtime costs that often exceed direct maintenance expenditures. High downtime costs are usually experienced by installations without redundancy or with non-spared equipment. Here, the total cost of maintenance equals material costs plus labor costs and the value of lost production.

Both frequency and duration of shutdowns can be reduced with carefully targeted planning of maintenance work. Such detailed planning allows streamlined labor and spare parts allocation. But intelligent allocation requires information on machine condition to project wear progression and probable time to failure. In condition-based maintenance, machines are shut down only if their condition demands it. Parts are changed only if a damage criterion is reached. In this way the total anticipated survivability of parts in terms of remaining life and wear reserves should be exploited. Thus, achieving a reduction in material costs may be possible only if one has reasonably accurate data on the machine's condition. One obviously gauges the existing wear potential in traditional wear parts (e.g., piston rings or packing) and thereby optimizes machine operating life [1].

Efficiency is another indicator of the condition of a machine. The primary purpose of efficiency monitoring in reciprocating compressors is to record changes in process or machine parameters that influence energy transfer to the compressed gas. Low efficiency causes gas temperature rise and increases power consumption. The efficiency of a reciprocating compressor may be determined, for example, by finding how compression power is related to the driver's power consumption.

3.6.3 What to Monitor and Why

The objectives described in Section 3.6.1 are general and not restricted to reciprocating compressors; they apply to numerous industrial machines. However, designing an effective strategy for the condition monitoring of systems of reciprocating compressors, their mechanical features, and perhaps their most vulnerable parts must be analyzed in terms of maintenance frequency. This was done by Dresser-Rand in 1997 through a survey of 200 operators and designers on the causes of unscheduled shutdowns of reciprocating compressors. The results (Fig. 3.14) clearly indicate the relative maintenance intensity of certain component groups. These statistics show that eight component groups were responsible for 94% of unscheduled shutdowns. Valve defects are obviously responsible for most of the unscheduled maintenance events. More recent experiences indicate similar results, even though the absolute involvement ratio of valves has dropped slightly, due to the use of new materials [2].

Today, monitoring systems are marketed for every component listed in the statistics for rotating machinery. The specific requirements of a reciprocating compressor must be considered when choosing a system. For example, analyses of entire subassemblies or operating point-specific threshold checks are appropriate to detect valve damage. As of 2006, the three most important methods are (1) measurement of the valve pocket temperature, (2) p–V diagram analysis, and (3) vibration analysis.

Valve Pocket Temperatures Measuring the gas temperature in the valve pocket is the simplest and most cost-effective method of valve condition monitoring. The gas temperature in the valve chamber can be measured with a temperature probe, observing the upflow of the suction valve and the downflow of the discharge valve. If there is an obvious increase in temperature at one valve, one can assume that there is damage (e.g., a leak) at this point (see Fig. 3.15).

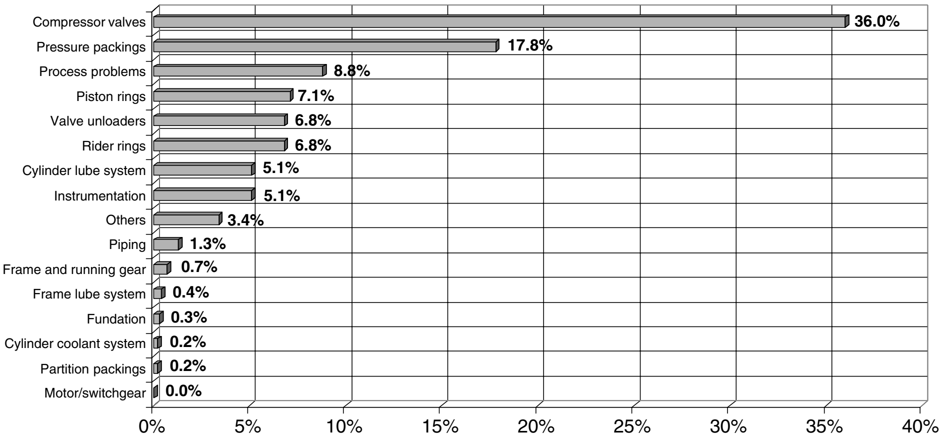

FIGURE 3.14 Primary causes of unscheduled reciprocating compressor shutdown. *(Dresser-Rand Company, Olean, N.Y.)*

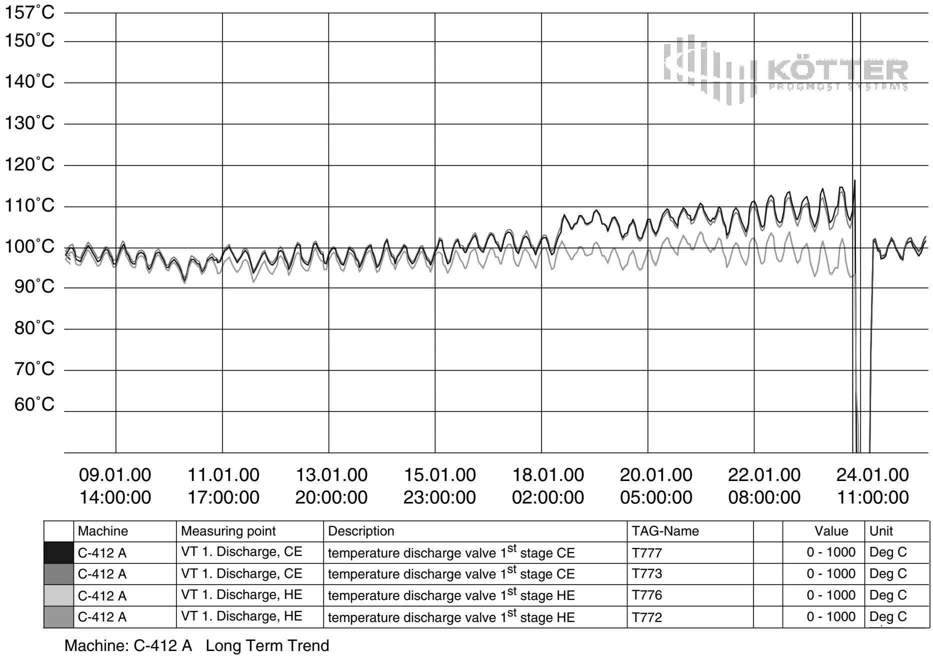

	Machine	Measuring point	Description	TAG-Name		Value	Unit
■	C-412 A	VT 1. Discharge, CE	temperature discharge valve 1^{st} stage CE	T777		0 - 1000	Deg C
▩	C-412 A	VT 1. Discharge, CE	temperature discharge valve 1^{st} stage CE	T773		0 - 1000	Deg C
□	C-412 A	VT 1. Discharge, HE	temperature discharge valve 1^{st} stage HE	T776		0 - 1000	Deg C
▨	C-412 A	VT 1. Discharge, HE	temperature discharge valve 1^{st} stage HE	T772		0 - 1000	Deg C

FIGURE 3.15 Head and crank end discharge valve pocket temperatures, showing distortion caused by a broken valve plate on a crank end valve. (*Prognost Systems GmbH, Rheine, Germany*)

This method has the advantage of being inexpensive and simple to install in virtually all types of valves. Generally speaking, the measuring points are integrated directly to the process control system and can therefore be fed into larger monitoring systems. The occasionally difficult interpretation of plain measurement data in multistage machines or where there are varying pressures on the intake and discharge sides is noted. However, these problems can be countered by adopting operating condition-dependent threshold monitoring.

With moderate investment in technical effort and cost, an examination of valve pocket temperatures does, in many instances, provide important information on the pressure-retaining capability or *sealing condition* of the valves.

p–V Diagram Analysis In *p–V* diagram analysis the dynamic pressure change inside a cylinder is measured. For this monitoring task, special pressure sensors with a frequency sensitivity of about 5 kHz are needed. These sensors are installed in a bore connecting directly into the cylinder; the composition of hydrocarbon gases may impose specific requirements on these pressure sensors.

Examination of *p–V* diagrams ranks among the most useful and important methods of determining overall valve condition. Recorded signals even contain clues as to the condition of specific sealing elements in the cylinder area. Valve leakage causes characteristic changes in the time rate of change of pressure. The measured time rate of pressure change (see also Chapter 2) is converted into a *p–V* diagram for which characteristic values are calculated at certain fixed points. Threshold values such as valve losses, polytropic exponents, or crank angle at which suction pressure is reached are monitored. Deviation amplitudes and the geometry of relevant excursions on the diagram identify the defect location as either the suction or discharge valve.

Cylinder pressure is a key condition indicator, as it reflects the real situation inside a cylinder. The user obtains clear local and function-oriented information on component condition and can also identify the precise effects on the compression process of the machine. Understanding the extent of a capacity reduction caused by component damage leads to an informed decision on whether repairs are necessary and economically justified.

p–V diagram analysis with automatic data formatting requires meticulous operating point-dependent monitoring. The various compressor operating or load conditions must be taken into account and differentiation made between operation- and condition-dependent changes in data. In particular, this applies to machines that regulate capacity with stepwise valve unloading. The energy absorbed by the compression process can be read directly from the area of the measured *p–V* diagram, making it possible to determine the efficiency directly.

Good *p–V* analysis is one of the central and most comprehensive methods for monitoring changes in condition in piston seal tightness. Although instrumentation retrofits on older machines can be relatively expensive, the quality and volume of information often makes it very easy to cost-justify the retrofits. Modern means of condition monitoring should certainly be incorporated in new reciprocating process compressors.

Vibration Analysis Additional information on valve condition is provided by acceleration amplitudes measured at the compressor cylinders. This mode of monitoring involves installing accelerometers on the cylinders, and frequencies up to 30 kHz are of interest here. Acceleration is, of course, the time rate of change of vibration velocity, which, in turn, reflects valve movement and valve component displacement with respect to time. Sensor locations must be selected such that vibrations from as many valves as possible can be measured.

Above all, this provides information on the valve opening and closing processes, where large vibration peaks occur. It identifies *valve flutter,* which often results in dramatic reductions in valve life. Among other possibilities, valve flutter frequently occurs in (rarely used) variable-speed situations or in reciprocating compressors whose stage pressure has been altered. Figure 3.16 illustrates a typical vibration excursion attributed to valve flutter.

As the opening and closing of the suction/discharge valves takes place only at certain intervals at different points on the crank revolution, the vibrations measured at the cylinder—apart

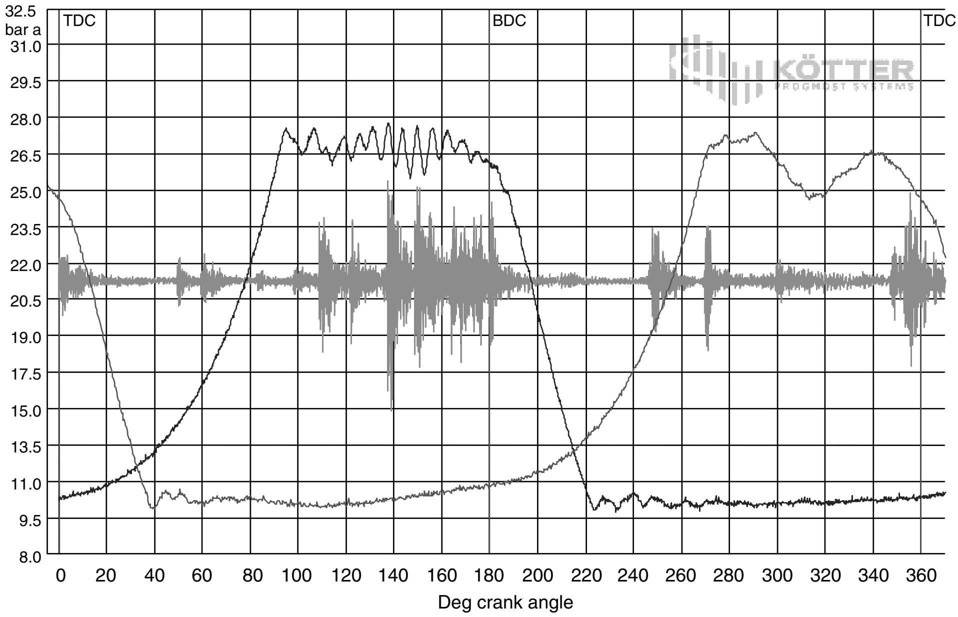

	Machine	Measuring position	Description	TAG-Name	Value	Unit
■	HDS-1238 B	Cyl 1	Vibration signal	X771		m/s^2
■	HDS-1238 B	Cyl 1, CE	Pressure signal	P776		bar
■	HDS-1238 B	Cyl 1, HE	Pressure signal	P775		bar

FIGURE 3.16 Cylinder vibration and indicated pressure course measured with valve flutter occurring at the crank end discharge valve. (*Prognost Systems GmbH, Rheine, Germany*)

from the peaks of valve action—also show wide areas with relatively low amplitudes. To provide effective vibration monitoring and to be able to separate the low-vibration areas and the vibration peaks caused by valve action and to monitor them separately, a special analysis approach is required. Here the vibration signal of a crank revolution of 360° is split into 36 segments of 10° each. Characteristic values are calculated for each segment (e.g., for peak and root-mean-square (RMS) values). Each segment is allocated its own threshold value (see Fig. 3.17).

The particular advantage of segmented vibration analysis centers on aspects of integrated diagnosis that generate condition information directly from the signal measured. Each segment is allocated one phase of the work cycle: say, gas intake vs. gas compression. When a threshold is exceeded, direct inferences can be made regarding valve function and component condition.

Vibration analysis on the cylinder is especially effective in combination with pressure monitoring so as to immediately recognize and then quickly prioritize the interpretation of threshold violations. When installing in accelerometer, the mounting points must be checked for signal quality to ensure that peaks are transmitted when valves open and close. Usually only one sensor is mounted per cylinder, so the installation costs are slightly less than for *p–V* diagram analysis.

Piston Rod Packing The second most frequent reason for unscheduled shutdowns, after deficiencies with the compressor inlet and outlet valves, relates to packing problems. The packing components seal the cylinder at the piston rod passage opening. Two different

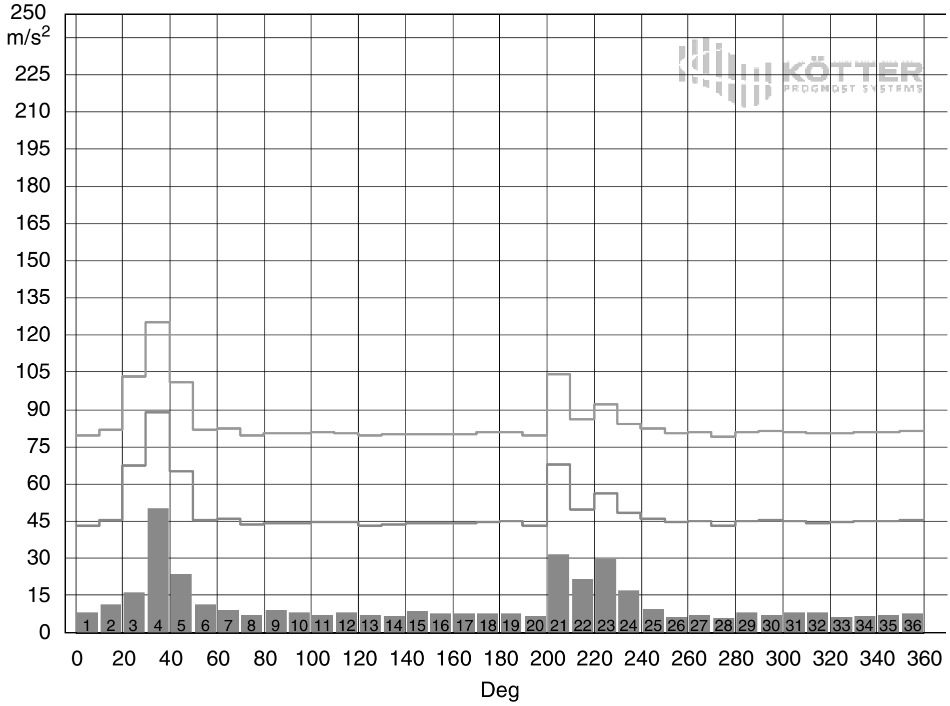

	Machine	Measuring position	Description	TAG-Name	Value	Unit
■	GB-1561	Cyl 1	Vibration peak values	X98451		m/s^2

FIGURE 3.17 Segmented vibration signal with two-stage threshold setting. (*Prognost Systems GmbH, Rheine, Germany*)

approaches are commonly used to monitor packing wear: (1) measurement of leakage gas flow and temperature, and (2) *p–V* diagram analysis.

Gas leakage flow and temperature are possible indicators of packing wear. Monitoring is accomplished by installing either a temperature probe or a flow gauge in the leakage vent. Obviously, a measurable increase in leakage gas volume or temperature is caused by packing wear or lack of tightness. Leakage gas quantity monitoring is widely used in new compressors, although temperature measurements are valuable as well. However, quantifying leakage losses facilitates economic assessment of the timing of corrective measures. Special passageways may be required to install suitable sensors. The measuring points are then either direct-connected (linked) to the monitoring system or become part of the digital process control system.

To some extent, *p–V* diagram analysis serves to analyze the condition of the packing. Leakage increases cause discrete changes in the indicated pressures and the instantaneous timing of the attendant pressure excursions. Figure 3.18 shows the pressure behavior on the crank-end side of the cylinder, one with tight packing and the other with leaking packing. The changes in the area of reverse expansion are not difficult to identify.

Piston Rings and Rider Bands To determine wear of the piston and rider bands (occasionally called *rider rings*), a *rod drop analysis* is widely used. This involves the piston rod drop being measured continuously by a proximity sensor. In the course of its life time, piston ring wear leads to measurable piston rod drop. For this purpose an eddy-current probe (induction

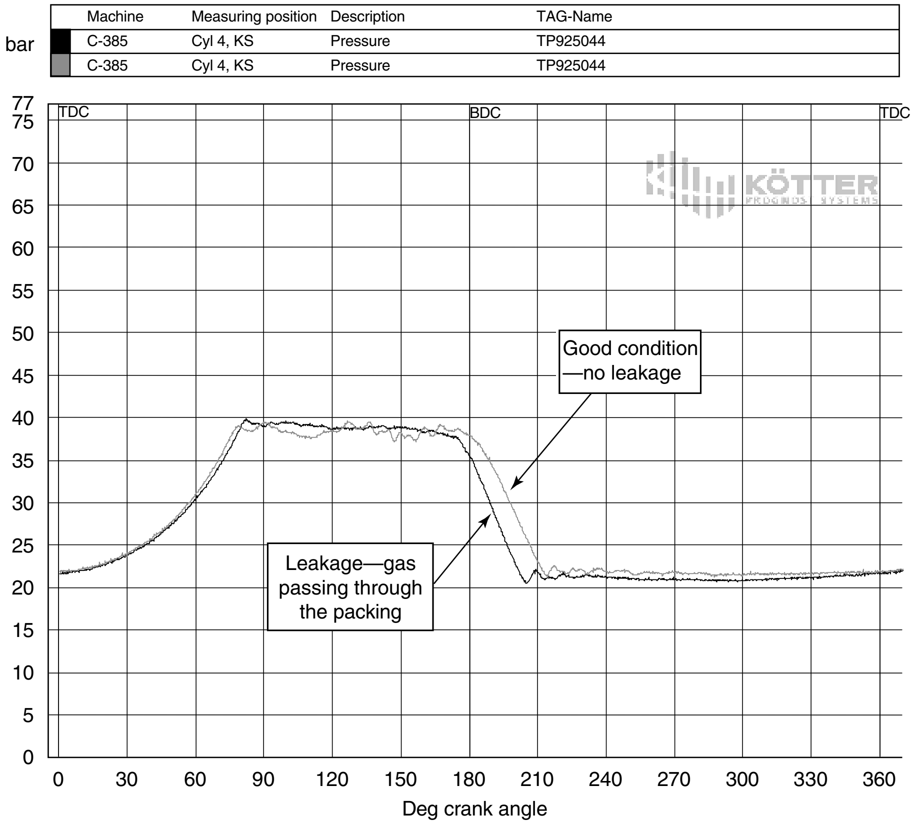

FIGURE 3.18 Effect of leaking packing on the pressure course indicated. (*Prognost Systems GmbH, Rheine, Germany*)

proximity sensor) is fitted to the packing. For signal analysis, individual interval values at specific points on the piston head are measured. Also, specific signal segments can be interrogated as needed or analyzed over the entire signal range. These analyses are particularly useful to spot interruptions caused, for instance, by particles or lubricant residue on the piston rods. Once identified as such, the total signal content can be further interpreted and its relevance assessed. In addition, when there is damage to the piston rod connections to the piston or to the crosshead, information can be gained from the total rod drop signal as the piston rises. Figure 3.19 contrasts the course of a rod-drop signal in good condition to the signal when the piston rod–crosshead connection is broken. Due to the loose connection, the position signal shows strong vibrations in certain areas.

Determining rider ring wear requires monitoring of the measured values over a long period of time in the form of a trend. Figure 3.20 represents the trend values of four segments of a piston rod analysis over a period of about 10 weeks. The values shown give the distance measured from the piston rod to the sensor in the following crank angle areas: 0 to 10°, 80 to 90°, 170 to 180°, and 350 to 360°. The exponential increase in wear is clearly identifiable.

On inspection, the piston rings were found to be badly worn. A more detailed study of the cylinder lubricant (see Fig. 3.14 with 5.1% of the causes) found a partially blocked lube oil inlet pipe. The reason for the particularly rapid rod drop could thus be linked to inadequate cylinder lubrication.

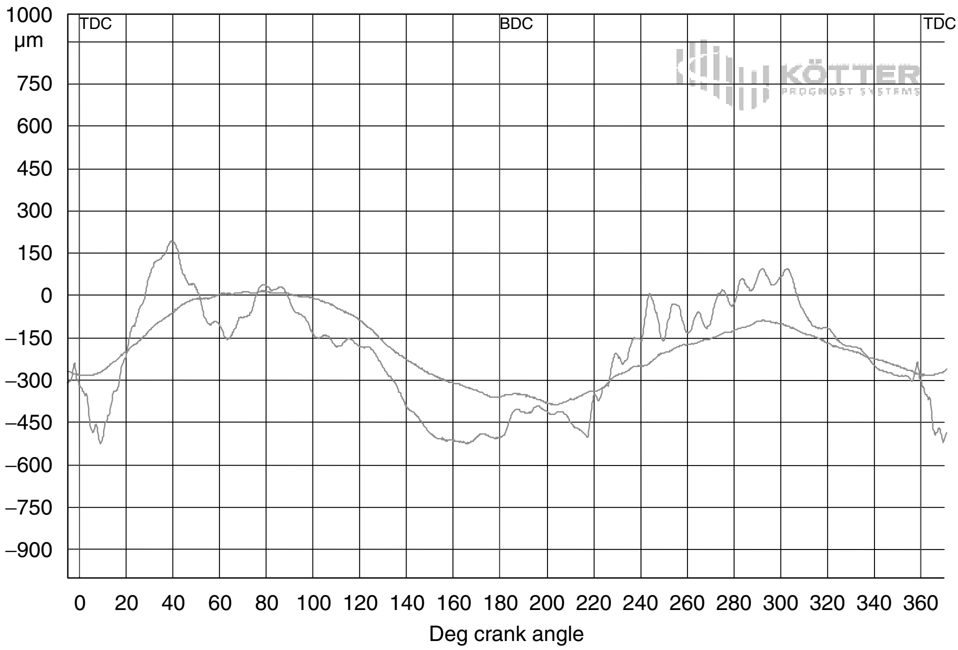

	Machine	Measuring position	Description	TAG-Name	Value	Unit
■	V-760	Roddrop 1	Rod drop signal 1	SN 576029		µm

FIGURE 3.19 Comparison of normal rod drop signal with a distorted curve due to a loose connection between the crosshead and the piston rod. (*Prognost Systems GmbH, Rheine, Germany*)

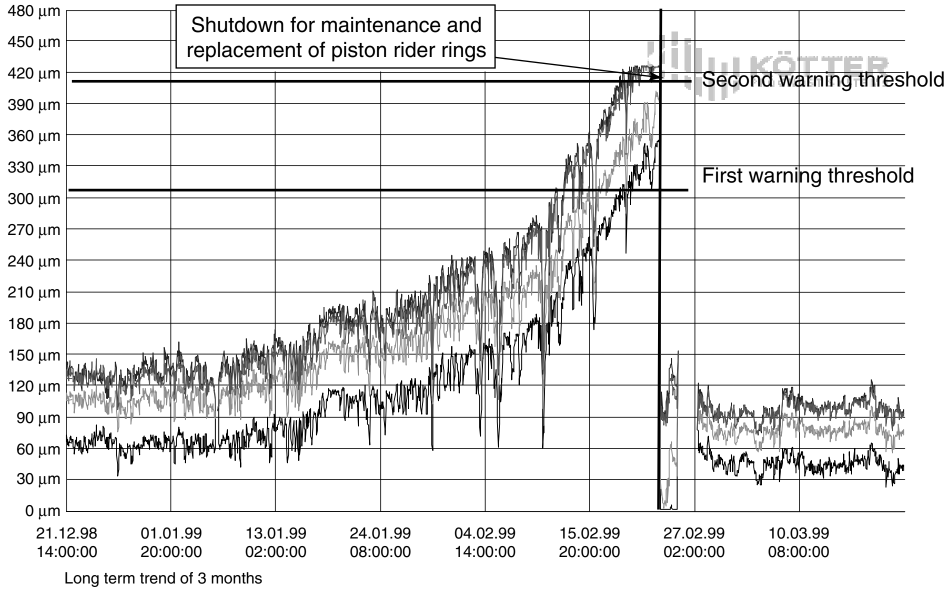

FIGURE 3.20 Rod-drop values of segments 1, 9, 18, and 27 (1-hour average) within the last eight weeks prior to the shutdown for replacement of the worn rider rings. (*Prognost Systems GmbH, Rheine, Germany*)

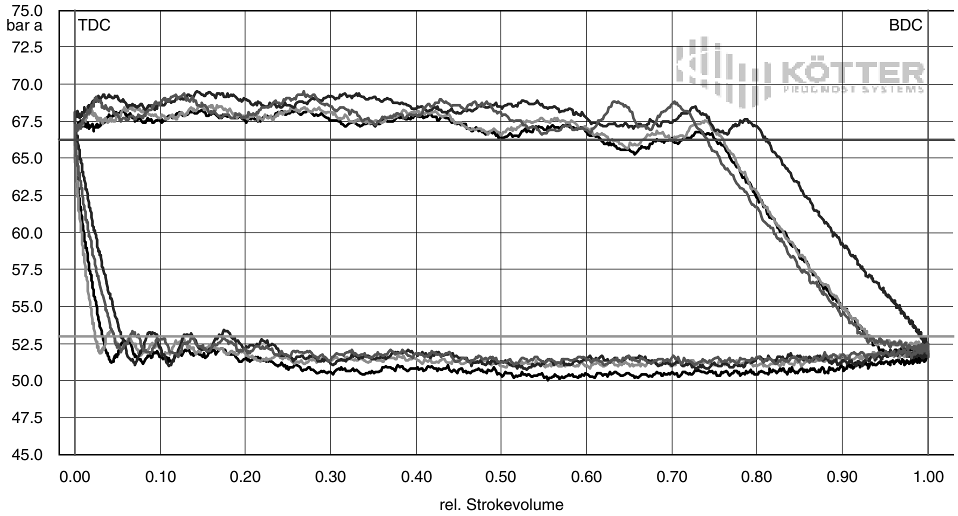

	Machine	Measuring position	Dataname	TAG-Name	Value	Unit
■	K004	Cyl. 1, HE	p-V-diagram	03PI201		bar a
■	K004	Cyl. 1, CE	p-V-diagram	03PI200		bar a
■	K004	Cyl. 2, HE	p-V-diagram	03PI203		bar a
■	K004	Cyl. 2, CE	p-V-diagram	03PI202		bar a
■	K004	SP Cyl. 1,HE	suction pressure Cyl. 1, HE	03PC305	52.9	bar a
■	K004	DP Cyl. 1,CE	discharge pressure Cyl. 1, CE	03PI304	66.2	bar a

FIGURE 3.21 *p–V* diagrams of a one-stage two-cylinder compressor with one defective valve unloader. (*Prognost Systems GmbH, Rheine, Germany*)

Valve Unloaders Throughput or capacity variation of reciprocating compressors is important where production adjustments and energy savings are of greatest interest. Although the reverse flow principle of capacity control has been known for decades, innovations in valve unloaders and suction valve design made it practical to use this control mode for reciprocating compressors.

Effective function monitoring of these control devices is possible with *p–V* diagram analysis. Measuring the time rate of pressure change reflects cylinder loading or cylinder capacity as a function of time. If *p–V* diagrams are analyzed or compared in conjunction with crank angle position, any control errors can be quickly spotted and associated with a given cylinder. Figure 3.21 shows the four *p–V* diagrams of two dimensionally identical double-acting cylinders equipped with valve unloaders. The lifting device on one of the cylinders is obviously not working properly. In many instances more information on the proper adjustment of a lifting device can be gained from vibration monitoring at the cylinder.

Running Gear A number of monitoring methods are employed to determine the condition of compressor running gear components. As a rule, temperature measurements are used for wear monitoring of crankshaft and connecting rod bearings. Temperature probes and their installation are not associated with high costs. These probes or transducers are frequently supplemented by measurements of lube oil flow and temperature.

Traditional means of vibration monitoring are employed to gauge the overall mechanical condition of reciprocating compressors and to effect precautionary shutdowns so as to avoid consequential damage. To that end, vibration sensors or accelerometers are mounted in the crank or crosshead slide areas. Essentially the same technical requirements pertain to sensor frequency resolution and measuring modes as were outlined earlier for cylinder vibration measurements.

In analyzing vibration processes, segmented analyses have proven their worth in terms of rapid diagnosis. This means that vibration peaks (e.g., at characteristic load change points) can be monitored effectively. Figure 3.22 shows the measured vibration peaks in the area of the crosshead slide that occur at the time of rod load reversal, typically when there is increased bearing play in the crosshead bolt.

To avoid consequential damage, it is important to conduct continuous real-time analysis and quickly alert operating staff or shut down the machine. These requirements are met by special continuous monitoring, which subjects the vibration signals of each crank revolution—individually and segmented—to a threshold check (safety monitoring). In addition, frequency analyses (FFT) of specific signal sections (e.g., of the load exchange areas) can provide information on structural and mechanical changes.

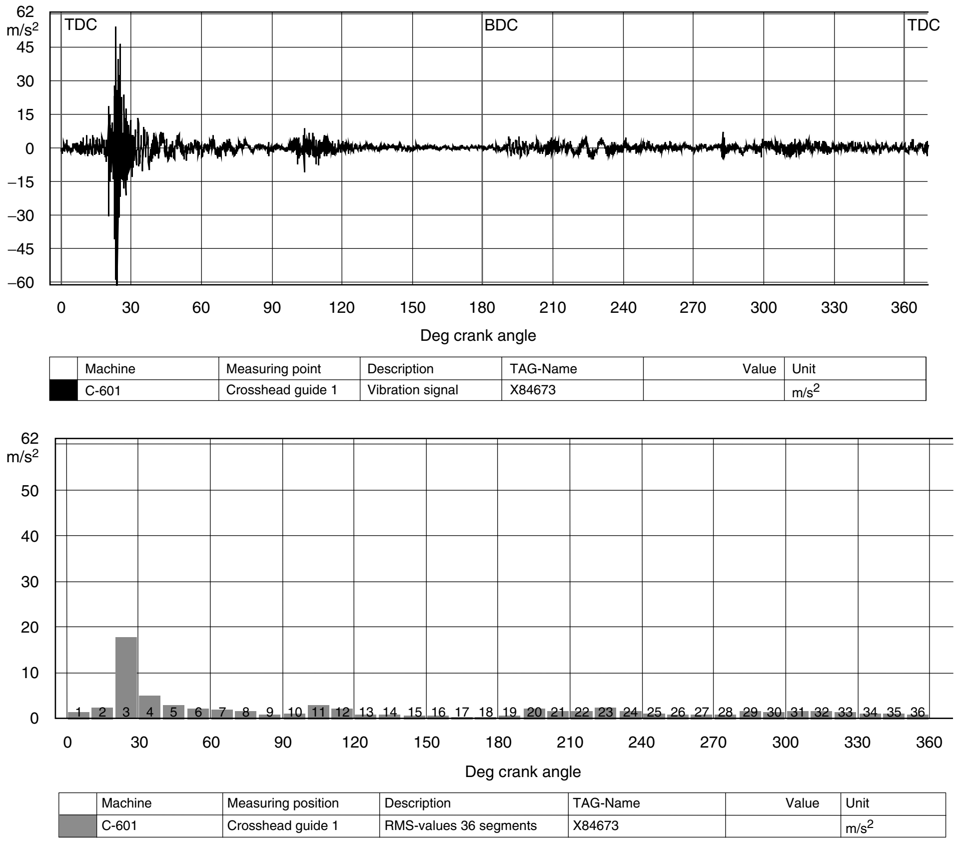

	Machine	Measuring point	Description	TAG-Name	Value	Unit
■	C-601	Crosshead guide 1	Vibration signal	X84673		m/s²

	Machine	Measuring position	Description	TAG-Name	Value	Unit
▨	C-601	Crosshead guide 1	RMS-values 36 segments	X84673		m/s²

FIGURE 3.22 Measured vibration and related segmented RMS values showing a peak at the rod load reversal. (*Prognost Systems GmbH, Rheine, Germany*)

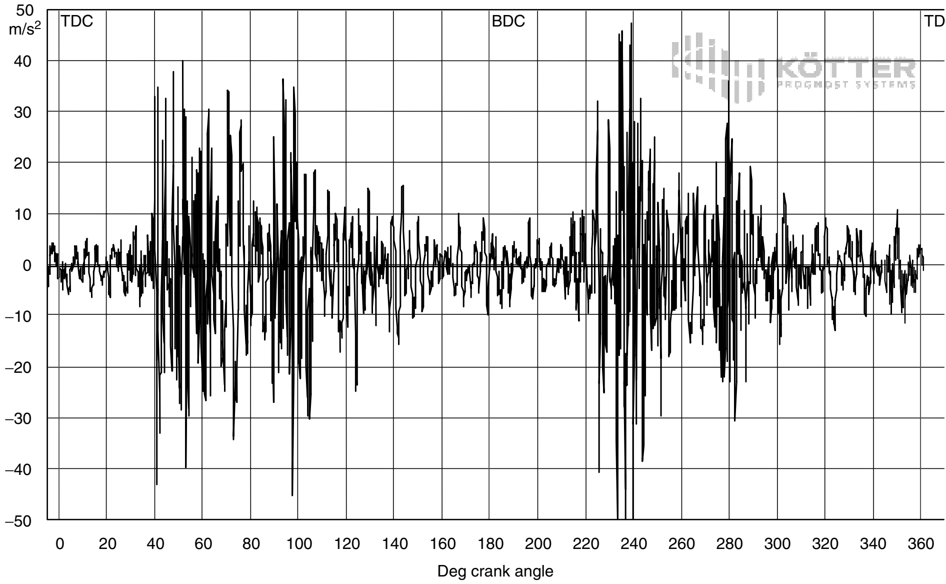

	Machine	Measuring Point	Description	TAG-Name	Value	Unit
▨	HDS-421	Crosshead guide 1	Vibration signal	HDS411		m/s^2

FIGURE 3.23 Vibration signal measured at a crosshead slide with damage at the crosshead pin bolt lock. (*Prognost Systems GmbH, Rheine, Germany*)

Figure 3.23 shows the vibration signals of a four-crank horizontal opposed compressor measured on the crosshead slide that triggered an alarm. Inspection of the machine revealed a defect in the crosshead bolt that had already destroyed the pin bolt lock. With the rapid alarm it was possible to avoid the crosshead bolt moving out and causing substantial consequential damage to the crank mechanism.

The Present and the Future Experience in operating reciprocating compressors has highlighted the focal point of maintenance work. Above all, the main areas for using condition monitoring center on seal components (valves, packings, piston rings) and the machine running gear. Methods and systems for analysing the condition of these components have been known and tested for many years [2,3].

Certain analytical methods, such as *p–V* diagram analysis or vibration analysis, make it possible to assess several components with one recorded signal. But to get a more precise understanding of the condition of one group of components, other measurement methods must supplement the analysis. The real-time capture of transient, instantaneous, and rapidly changing vibration or more slowly progressing changes in temperature is being pursued. Integrating these condition-based values in a modern computer-linked monitoring system now offers the maintenance team a single analysis and diagnostic interface.

Systems such as the Prognost-NT have served the reciprocating compressor market since the early 1990s and have done very well. As time progresses, mathematical models will be used increasingly to display the mechanical and physical processes of large reciprocating compressors. Even more detailed error recognition and diagnosis systems will be possible, and a variety of technical options will present themselves to the user.

REFERENCES

1. Ulrich Klein, *Schwingungsdiagnostische Beurteilung von Maschinen und Anlagen* [Vibration diagnostic assessment of machines and plants], Verlag Stahleisen GmbH, Düsseldorf, Germany, 1998.
2. Stephen M. Leonard, *Increasing the reliability of reciprocating compressors in hydrogen services*, presented at the NPRA Maintenance Conference, New Orleans, L., May 20–23, 1997.
3. Johannes Nickol, *Kolbenkompressoren in Prozeßanlagen: 24.000 Laufstunden Verfügbarkeit, Utopie oder Realität?* [Reciprocating compressors in process installations: availability of 24,000 hours, utopia or reality?], presented at the First EFRC Conference, Dresden, Germany, Nov. 4–5, 1999.

4

LABYRINTH PISTON COMPRESSORS

Labyrinth piston compressors represent a very important subset of nonlubricated reciprocating machines. Generally vertically oriented, they are typically configured as shown in Figs. 4.1 through 4.3. Virtually every one of the thousands of machines in service worldwide since 1935 has been manufactured by Sulzer-Burckhardt, now Burckhardt Compression AG, of Winterthur, Switzerland.

4.1 MAIN DESIGN FEATURES

The main design features are highlighted in Figs. 4.1 and 4.2. Labyrinth piston compressors do not use piston rings or rider bands. Unlike the oil-free reciprocating compressors of traditional design with dry-running piston rings, no friction occurs in the cylinder (1). The same applies, as a rule, for the piston rod stuffing box (4). Instead of piston rings, the labyrinth piston (2) is provided with a large number of grooves that generate a labyrinth-sealing action with regard to the cylinder wall. Although the cylinder wall is provided with grooves, they are finer than those of the piston.

The piston moves within the cylinder with a clearance so that even in the warm state, contact-free running is assured. Thermostats at the gas outlet detect any overheating that could lead to the piston scraping the cylinder wall. Thanks to this construction, lubrication of the cylinder and of the piston rod stuffing box is not necessary. Moreover, the suction and discharge valves are designed so that no lubrication is required.

The driving mechanisms of the compressors are usually lubricated by a gear pump (8) driven by the crankshaft. Depending on the requirement, compressors can be equipped additionally with an oil pump for preliminary lubrication (driven by an electric motor), an oil cooler, and a high-efficiency oil filter. The lubricating oil system supplies oil under pressure

---

A Practical Guide to Compressor Technology, Second Edition, By Heinz P. Bloch

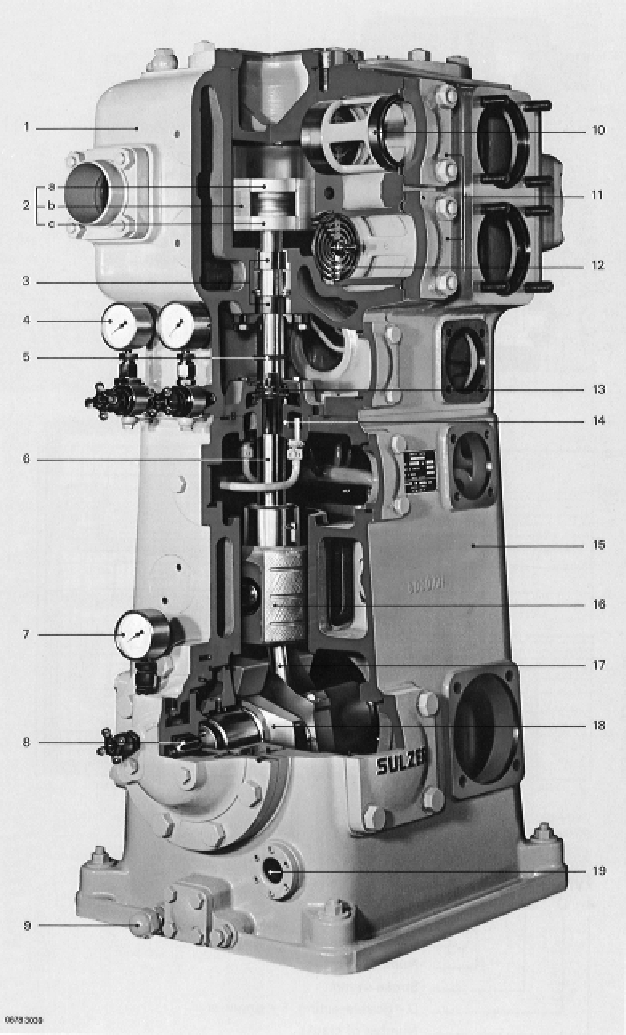

1	Cylinder block
2	Labyrinth piston
2a	Upper piston crown
2b	Piston skirt
2c	Lower piston crown
3	Piston-rod gland
4	Pressure gauge with throttle valve
5	Piston-rod shield
6	Piston-rod
7	Oil pressure gauge
8	Geared oil pump
9	Oil discharge
10	Lantern
11	Valve cover
12	Plate valve
13	Oil scarpers
14	Piston-rod guide bearing
15	Frame
16	Crosshead
17	Connecting rod
18	Crankshaft
19	Oil sightglass

FIGURE 4.1 Labyrinth piston compressor. *(Sulzer-Burckhardt, Winterthur and Basel, Switzerland)*

to the main bearings, the lower and upper connecting rod bearings, and the crosshead guide mechanisms. Splash oil lubrication is provided for the piston rod guide bearings (6).

When operating in the normal temperature range, both cylinder and crosshead guide mechanisms are water cooled. This applies also for the piston rod guide bearings. Where low suction temperatures apply, such as in refrigeration applications, cooling of these bearings can be dispensed with.

The piston is guided from outside the compression space by the piston rod, which is located with a relatively small clearance in the guide bearing (6) and by a precise guidance of the crosshead (7). The separation between the oil-free portion and the oil-lubricated crank drive is ensured by oil scrapers (6). To prevent the thin film of oil remaining on the piston rod from creeping upward along it, the rod is provided with an oil slinger. The distance between the drive mechanism and the stuffing box is greater than the length of the piston stroke, so that the oil-wetted portion of the piston rod cannot penetrate the oil-free stuffing box.

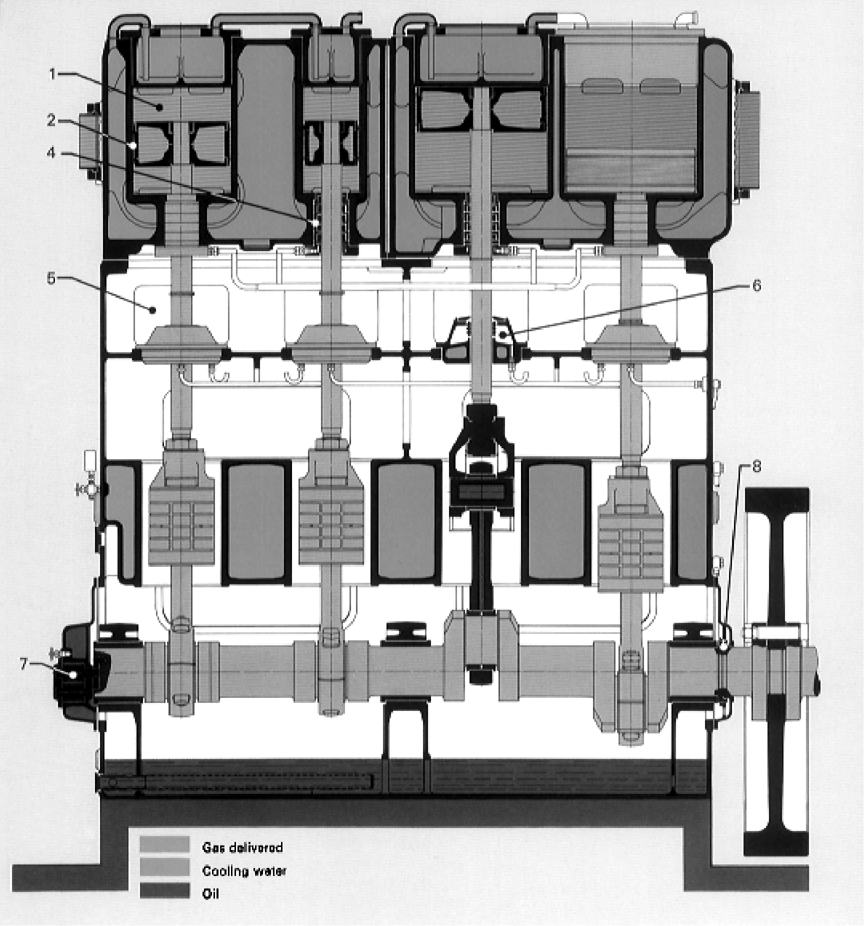

FIGURE 4.2 Longitudinal view of a three-stage labyrinth piston compressor. *(Sulzer-Burckhardt, Winterthur and Basel, Switzerland)*

4.2 ENERGY CONSUMPTION

From time to time, the opinion is voiced that labyrinth piston compressors require more energy than dry runners with piston rings. Hence, a question is raised as to whether the energy losses occurring in the labyrinths between piston and cylinder and between piston rod and stuffing box are, in fact, greater than those that take place at these points in dry runners because of friction and (as a matter of fact, smaller) gas losses. Comprehensive tests have shown that an immediate loss of drive power occurs in the case of the ring-sealed piston because of the unavoidable mechanical friction of the piston rings. Moreover, this results in unfavorable wall temperature influences on energy requirement and suction capacity. In the case of labyrinth pistons, where no mechanical friction occurs within the cylinder, any power losses at the piston are to be explained principally by leakage losses.

The experience gained from labyrinth piston machines indicates that for average to large volumes swept by the piston and for gases that are not extremely light, the energy losses due to leakage along the labyrinth are approximately equal, in some cases even smaller than

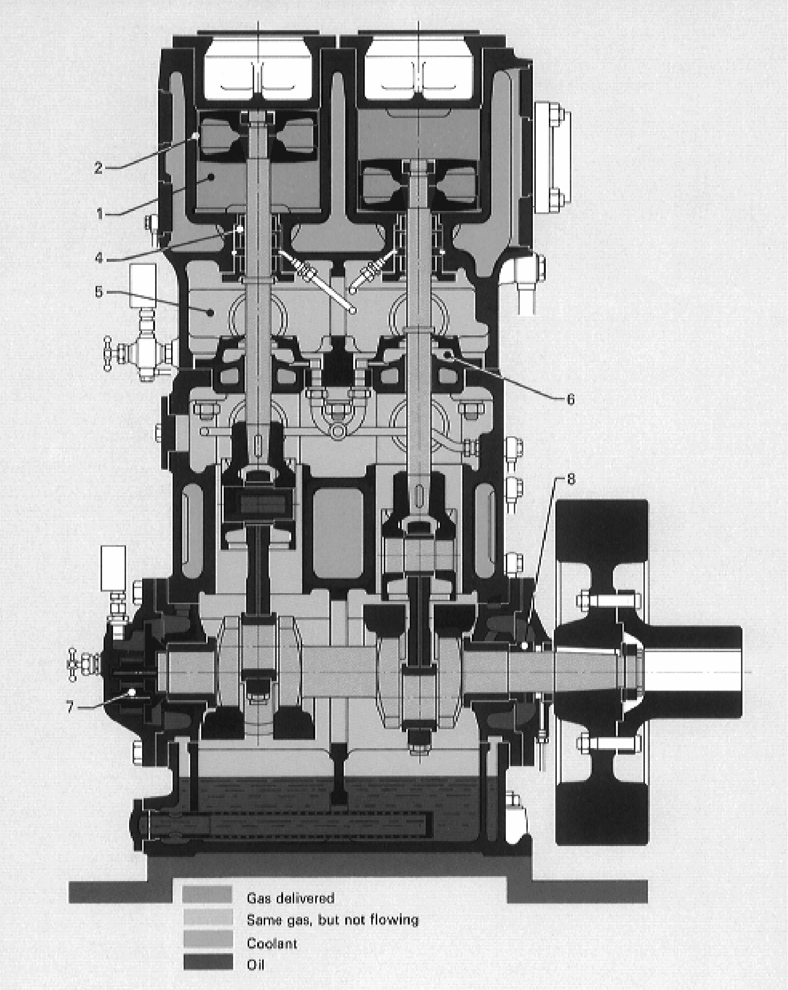

FIGURE 4.3 Longitudinal view of a single-stage labyrinth piston compressor with a completely encapsulated and pressure-tight crankcase. *(Sulzer-Burckhardt, Winterthur and Basel, Switzerland)*

those that occur because of friction, sealing leaks, and wall temperature influences in piston ring machines. However, the situation of the labyrinth piston, when light gases and small volumes swept by piston are concerned, is less favorable. As a consequence of the slight quantitative difference for air and similar-density gases, the comparison measurements have to be carried out very carefully and while accurately maintaining the same external conditions.

Two cases are described later where such comparisons were established by precise experiment. Labyrinth and plastic piston ring structures were made for two single-stage double-acting cylinder and piston sets. These were incorporated in a vertical single-throw standard crankshaft motion gear with a nominal speed of 750 rpm. Both cylinders had precisely the same dimensions. The only difference was in the surface configuration of the bores. Whereas one piston was of the standard labyrinth type, the other carried three plastic rings. In both cases the same compressor valves, pipelines, measuring instruments, and drive elements were used for the measurements. Differences in operating characteristics could thus be reliably established without disturbing side effects.

As is usual in the compressor sector, the comparison between the two test series was made using the efficiencies:

$$\eta_{\text{adiabatic}} = \frac{P_{\text{adiabatic}}}{P_{\text{effective}}} \tag{4.1}$$

$$\eta_{\text{isothermic}} = \frac{P_{\text{isothermic}}}{P_{\text{effective}}} \tag{4.2}$$

These values are shown in Fig. 4.4 as a function of the pressure ratio, determined for three different speeds of rotation.

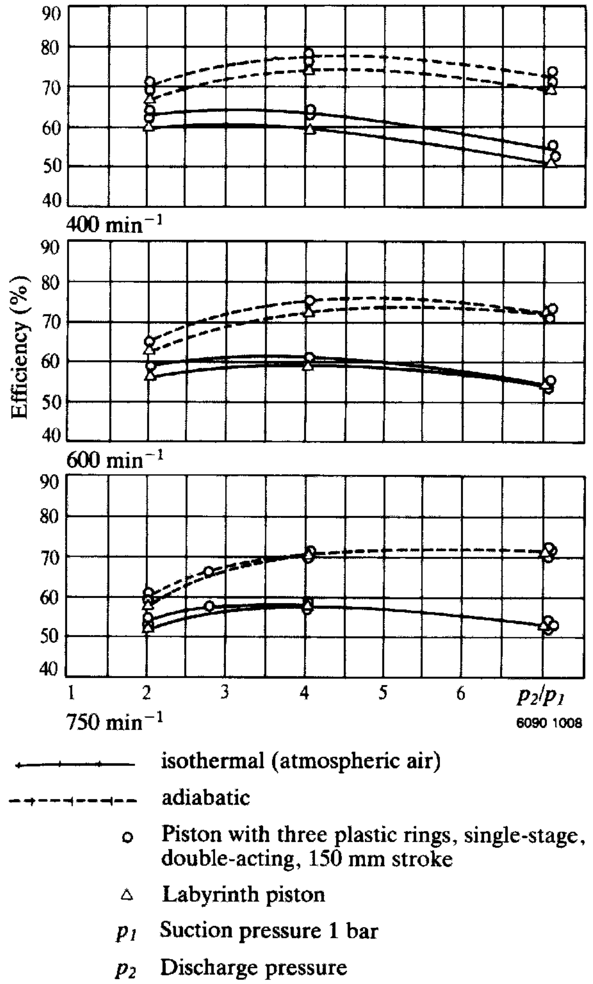

FIGURE 4.4 Efficiency comparisons of a conventional nonlubricated compressor and a labyrinth piston machine. *(Sulzer-Burckhardt, Winterthur and Basel, Switzerland)*

4.3 SEALING PROBLEMS

Sealing questions are of interest as well. Logically, where a compressor is not fully encapsulated, the piston rod stuffing boxes have to seal the cylinder to the outside. Where these are oil lubricated, the lubricating oil acts as a sealing agent. Dry-running packing rings that rub on the piston rod are not as effective as seals, and friction-free labyrinth packings are even less so.

As far as most gases are concerned, sealing problems play a big role in the choice of the compressor design. The labyrinth stuffing box of the labyrinth piston compressor consists principally of a number of graphite rings; these are fitted to the piston rod with longitudinal and transverse clearance in the annular chamber. The rings are self-centering with regard to the piston rod. Labyrinth grooves on the inner surface provide the required sealing effect. Graphite is an ideal material for packing rings, since it has good dry-running characteristics, high chemical stability, low thermal expansion, and is not hygroscopic. Moreover, packing rings made from graphite cannot run hot.

One- or three-part designs of graphite rings are used. Three-part rings, whose constituent parts are held together radially by two garter springs, have the advantage that they can be replaced without the piston and the piston rod having to be pulled. In addition, they can be reworked if they become somewhat worn on the inner surface. The purpose of these springs is not, however, to press the three parts of the ring onto the piston rod, but to facilitate fitting and dismantling. These rings also have clearance with respect to the piston rod.

The advantages of the pure labyrinth stuffing boxes during operation are so convincing that the designer accepts the unavoidable losses via the labyrinth and deviates from the friction-free principle only in special cases. These labyrinth losses are taken up in the lower part of the stuffing box and returned to the suction side of the compressor, so that as far as the environment is concerned, no or only negligible gas losses occur. However, the higher the value of suction pressure above atmospheric, the greater the gas losses through the lowest sealing elements. To keep these losses as low as possible, the lowest ring can be designed as a sliding contact-sealing element. Such a sliding ring is in three parts, smooth on the inner surface, and pressed lightly against the piston rod by garter springs. Special arrangements have been developed for higher suction pressures.

A machine design as illustrated in Fig. 4.5 can be used for the compression of gases that are neither poisonous nor flammable, such as air, carbon dioxide, oxygen, and nitrogen. Slight leakage of such gases to the outside can be tolerated. However, this does not apply for helium and argon. Although inert and nonpoisonous, their loss is not acceptable because of the high price.

Machines as illustrated in Fig. 4.6 are used for gases that are poisonous, flammable, and incompatible with lubricating oil. These have special stuffing boxes with gas sealing (mainly nitrogen), since strict separation between crankcase and distance piece (4) is absolutely necessary. The adaptor is flushed out with scavenging gas, and the crank mechanism is filled either with air or with scavenging gas.

Completely encapsulated compressors (Figs. 4.7 and 4.8) are used for gases that are compatible with lubricating oil but have characteristics that do not allow even the smallest amount of loss to the outside (e.g., all hydrocarbons, carbon monoxide, hydrogen, helium, and argon). The machine shown in Fig. 4.8 is of special pressure-resisting design—the K series. Originally, these machines were developed as refrigeration compressors (K is the abbreviation in German for *refrigeration*), so that they are also suitable for the compression of all refrigerants.

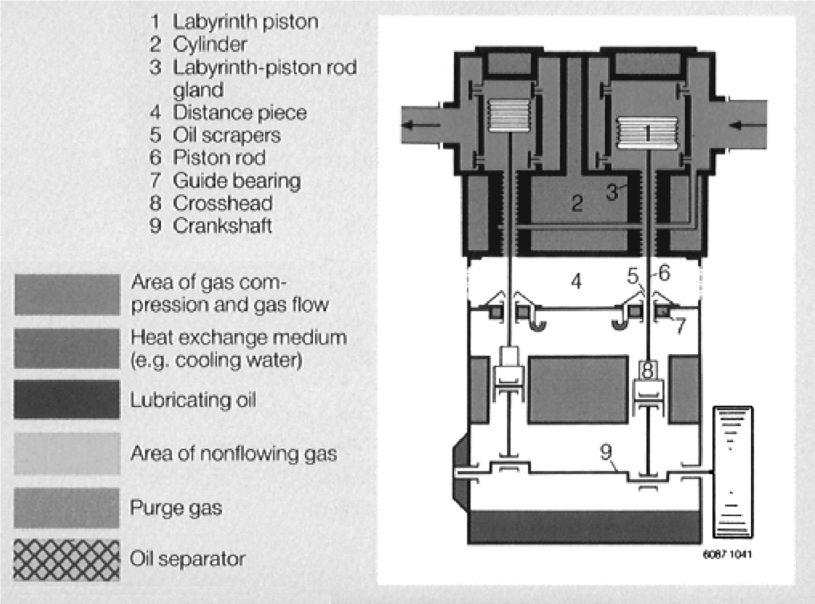

FIGURE 4.5 Labyrinth piston compressor with an open distance piece and a nonpressurized crankcase. Typically used for compression of gases, where strict separation between cylinder and crankcase is essential and where process gas is permitted in the open distance piece (e.g., for O_2, N_2, CO_2, process air; generally in the industrial gas industry). *(Sulzer-Burckhardt, Winterthur and Basel, Switzerland)*

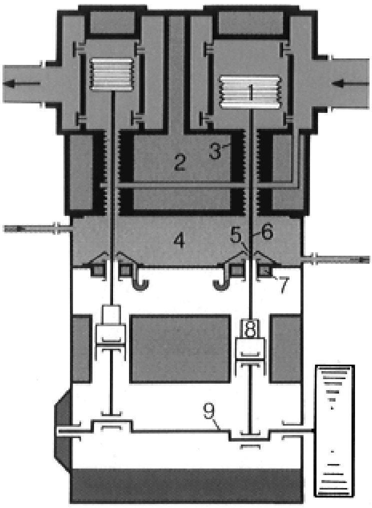

FIGURE 4.6 Labyrinth piston compressor with a closed and purged distance piece. Used for compression of gases, where a strict separation between cylinder and crankcase is essential and where no process gas may leak to the surroundings or no ambient air may enter the distance piece (e.g., for weather protection). *(Sulzer-Burckhardt, Winterthur and Basel, Switzerland)*

Attention has to be paid to the standstill pressure where closed refrigeration circuits are concerned. The crank mechanism of these compressors is thus designed for at least 15 bar internal pressure. For certain gases, however, the solubility in lubricating oil imposes a lower limit on the permissible internal pressure. The machines in Figs. 4.7 and 4.8 each feature mechanical seals. Unlike the pressure-resisting crankcase shown in Fig. 4.8, the

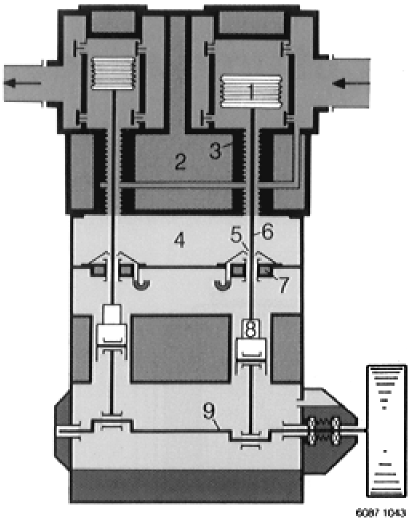

FIGURE 4.7 Labyrinth piston compressor with a gastight crankcase and a mechanical crankshaft seal. This design is used for compression of gases that are compatible with the lubricating oil (e.g., for hydrocarbon gases, CO, He, H_2, Ar) and where no process gas may leak to the surroundings. The suction pressure is limited by the design pressure of the crankcase. *(Sulzer-Burckhardt, Winterthur and Basel, Switzerland)*

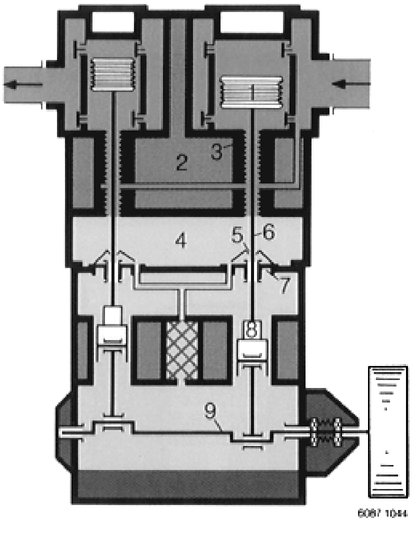

FIGURE 4.8 Labyrinth piston compressor with a gastight and pressure-tight crankcase and a mechanical crankshaft seal. Used to compress gases that are compatible with the lubricating oil and where no process gas may leak to the surroundings. Suction pressure may range between subatmospheric and crankcase design pressure. This machine finds its applications in closed cycles, for hydrocarbon gases, refrigerants, VCM, CO, N_2, CO_2, He, H_2, Ar, etc. *(Sulzer-Burckhardt, Winterthur and Basel, Switzerland)*

crankcase in Fig. 4.7 can only accept a low internal pressure. In closed machines, the gaseous medium usually fills the crankcase, where it can mix with the oil mist.

In nongastight machines, there is no danger that oil penetrates into the oil-free zone of the compressor since the pressure in the crankcase is very low. However, where pressure-resisting machines are concerned, gas flow from the crankcase into the cylinder part has to be expected if the suction pressure decreases. Such a flow, nevertheless, passes through the oil separator shown in the center of the crankcase (Fig. 4.8), where the oil mist is retained. An external pressure balancing line (with molecular sieve) can be used, if required, to improve the separation effect still further. Hence, this also can be regarded as an oil-free functioning configuration. Very low leakage rates can be achieved with the pressure-resisting machine design by virtue of a purpose-oriented construction (e.g., baseplate and frame as a one-piece casting, round frame openings with O-ring seals) in conjunction with an

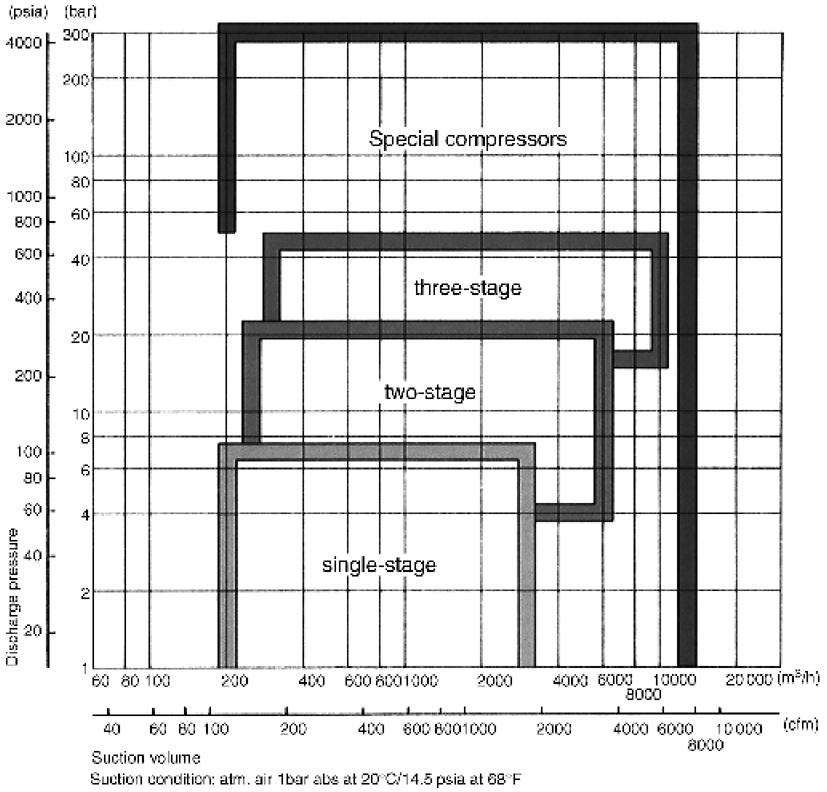

FIGURE 4.9 Typical application limits for labyrinth piston compressors. *(Sulzer-Burckhardt, Winterthur and Basel, Switzerland)*

especially carefully accomplished casting process. At machine standstill, these leakage rates for helium are in the range 10^{-3} to 10^{-4} cm^3/s. In many cases, even a leakage rate of 10^{-1} cm^3/s will meet the requirements. Special procedures have been developed to confirm such low leakage rates.

Labyrinth piston compressors are made in at least 40 frame sizes, with one, two, three, four, and six cranks for piston strokes of 65 to 375 mm and matching cylinders for one-, two-, three-, and four-stage compression. Available suction capacities range from 20 to 11,000 m^3/h and discharge pressures of up to 300 bar (Fig. 4.9). The permissible power input for the driving mechanism ranges from 20 to somewhat more than 2000 kW. The loadability of the crank mechanism is, however, limited by the permissible loading of the piston rod.

Since no oil can penetrate the cylinder and no temperature-sensitive materials are used, comparatively high compression ratios and final temperatures up to more than 200°C are possible. This means that in many cases, one compression stage less is required than would be necessary for compressor designs with plastic piston rings. It should be noted that the stage pressure ratios are often limited because of safety aspects (e.g., when compressing oxygen) and energy consumption considerations.

5

HYPERCOMPRESSORS*

Intimately bound to the chemical industry and based on a long evolution, the main stages of which were the liquefaction of air and the synthesis of ammonia, the technique of using very high pressures was eventually perfected from developments in the manufacture of low-density polyethylene. This is now the only industry requiring large reciprocating compressors for very high pressures, because the pressures necessary for other main chemical processes have been reduced steadily since 1945. For this reason, the present segment will be restricted to the ethylene compressors. Considering that the classical designs of reciprocating high-pressure compressors cover an uninterrupted range up to about 1000 atm, very high pressures will imply those greater than 1000 atm.

5.1 INTRODUCTION

A characteristic feature of the high-pressure ethylene polymerization process is that a very large difference in pressure is necessary between the inlet gas entering the reactor and the outlet of the recycle gas. The recirculators, generally called *secondary compressors* (Fig. 5.1), work between two limits: 100 to 300 atm on the suction side and 1500 to 3500 atm on the delivery side, for most of the existing processes. Because the coefficient of reaction lies between 16 and 30%, the secondary compressors have to handle three to six times the fresh gas quantity, thus being by far the most powerful machines in the production stream. When the industrial expansion began, their unit capacities were of 4 to 5 tons/h; now they exceed 50 tons/h, and their power requirement per unit has been increased from 600 hp up to some 20,000 hp.

* Contributed by Burckhardt Compression AG, Winterthur, Switzerland. Based on C. Matile's, Industrial reciprocating compressors for very high pressures, *Sulzer Technical Review*, Vol. 2, 1971.

A Practical Guide to Compressor Technology, *Second Edition*, By Heinz P. Bloch

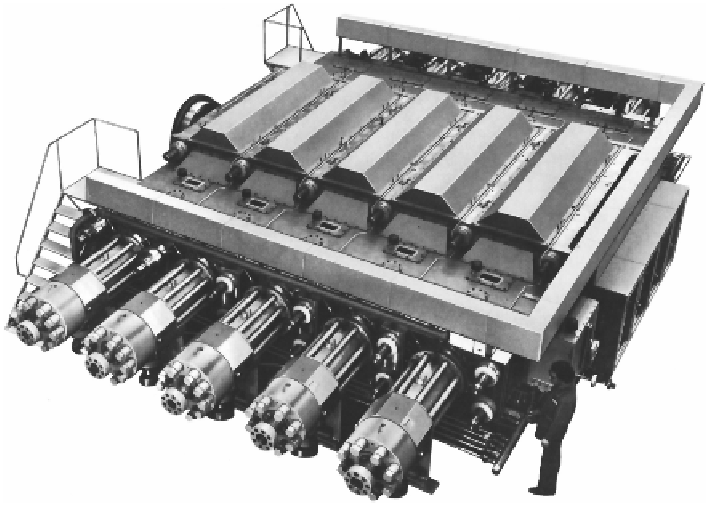

FIGURE 5.1 Large hypercompressor used in ethylene service. *(Sulzer-Burckhardt, Winterthur and Basel, Switzerland)*

Because the entire operating range of these secondary compressors takes place well above the critical point of ethylene, the thermodynamic behavior of the fluid lies somewhere between that of a gas and that of a liquid. This peculiar condition has two main effects. The first is a very small reduction of the specific volume with increasing pressure; for instance, at a temperature of 25°C, the specific volume is 3 dm^3/kg at 100 atm, 2 dm^3/kg at 700 atm, and 1.5 dm^3/kg at 4500 atm. The second effect is a very moderate rise in the adiabatic temperature with increasing pressure; for instance, with suction conditions of 200 atm and 20°C, the delivery temperature will reach only 100°C at 2000 atm.

These particular thermodynamic conditions greatly influence the design of high-pressure ethylene compressors. Compared with the conventional reciprocating compressor, the compression ratio is of little practical significance; the important factor is the final compression temperature, which should not exceed 80 to 120°C, depending on process, gas purity, catalyst, and so on, to avoid premature polymerization. The influence of the cylinder clearance on the volumetric efficiency is slight because of the small reduction in specific volume, and very high compression ratios are therefore possible with quite admissible efficiency. In addition, the stability of intermediate pressures depends chiefly on the accuracy of temperatures. For instance, in the case of two-stage compression from a suction pressure of 200 atm to a delivery pressure of 2500 atm, a drop in the first-stage suction temperature from 40 to 20°C will cause the intermediate pressure to rise from 1000 to almost 1600 atm.

For these reasons, a secondary compressor that has only one or two stages is required, despite the very large pressure differences involved. However, this again compels the designer to face extremely high mechanical strains, due to the high amplitude of pressure fluctuation in the cylinders. Finally, an additional and sometimes disturbing feature of ethylene must be mentioned. If the gas reaches very high pressure and high temperature simultaneously (which can easily occur in a blocked delivery port because of very low compressibility), it will decompose into carbon black and hydrogen in an exothermic reaction of explosive character.

5.2 CYLINDERS AND PISTON SEALS

Sealing of the high-pressure compression chamber is a major problem that could be solved by avoiding friction between moving and stationary parts. This has been realized for laboratory equipment and small-scale pilot plants by the use of either metallic diaphragms or mercury sealants in U-tubes, and such arrangements are still in use for research purposes. In addition, they have the advantage of avoiding any contamination of the compressed gas by any lubricant. Unfortunately, chiefly for economic reasons, they proved to be impractical for industrial compressors, at least for the present state of techniques. Thus, because labyrinth seals are out of the question for very high pressures, friction seals have to be accepted; in fact, two solutions are currently used—moving and stationary seals.

Metallic piston rings are the only sort of moving seals used in the large high-pressure reciprocating type of compressor. They are generally made in three pieces: two sealing rings, each covering the slots of the other, and an expander ring behind both of them, which also seals the gaps in the radial direction. The materials used are special-grade cast iron, bronze, or a combination of both, with cast iron or steel for the expander. The piston, of built-up design, comprises a series of supporting and intermediate rings with a guide ring on top and a throughbolt (two different designs are shown in Fig. 5.2). All parts of the piston are made of high-tensile steel, and particular care must be given to the design and to the stress calculation of the central bolt, which is subjected to severe strain fluctuations.

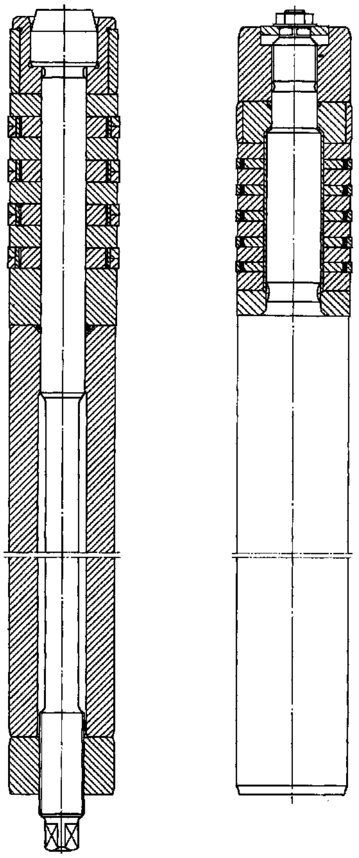

FIGURE 5.2 High-pressure pistons with piston rings. *(Sulzer-Burckhardt, Winterthur and Basel, Switzerland)*

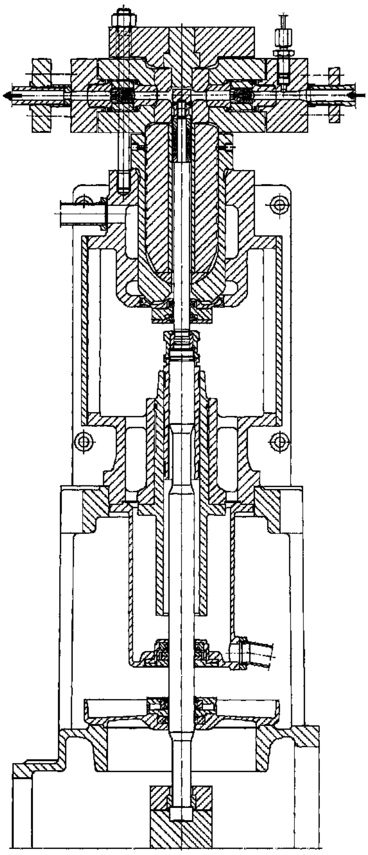

FIGURE 5.3 High-pressure cylinder for moderate end pressures. *(Sulzer-Burckhardt, Winterthur and Basel, Switzerland)*

The use of piston rings allows for a simple cylinder design, the main part of which is a liner that has been thermally shrunk to withstand the high variations of the internal pressure (see Figs. 5.3 and 5.4). The inner sleeve, which was previously made of nitrided steel, is now generally of massive sintered material such as tungsten carbide. The use of this expensive material is justified by two beneficial qualities: it possesses an extremely hard surface and has a high modulus of elasticity. The first improves the conditions of friction considerably and greatly reduces the danger of seizure. The high modulus of elasticity of sintered tungsten carbide allows the amplitude of the breathing movement under the internal pressure fluctuation to be much smaller than with steel. The stress variations in the expanded outer sleeves are therefore reduced appreciably. However, because these sintered materials have a very poor tensile strength, care must be taken to ensure that the inner sleeve is always under compression, even if the temperature increases. This is the main purpose of external cooling of the liner and not, as is usual, to dissipate the heat of compression.

Packed plungers are the other answer to piston sealing. Although some manufacturers still use packings of hard plastic materials (nylon or similar), the most widely used packings are the metallic self-adjusting type. They are usually assembled in pairs, the actual sealing ring tangentially split into three or six pieces being covered by a three-piece radially cut section. Both are usually made of bronze, kept closed by surrounding garter springs, and held in place by locating and supporting steel plates. These plates must also be thermally shrunk to resist the high variations in internal pressure. Unfortunately, the use of

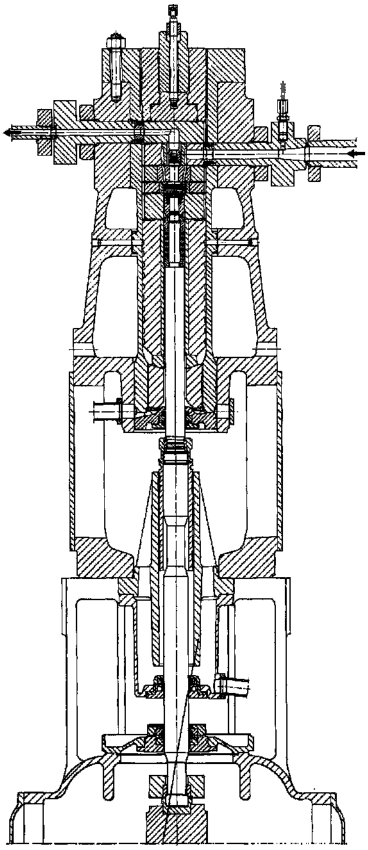

FIGURE 5.4 High-pressure cylinder for medium end pressures. *(Sulzer-Burckhardt, Winterthur and Basel, Switzerland)*

sintered hard materials is restricted by the fact that the supporting plates are subjected, in the axial direction, to heavy bending and shearing forces that these materials generally cannot stand. To improve the friction conditions of the packing rings, the high-tensile steel supporting disks are frequently surface hardened or plated with carbide. The plungers are made of nitrided steel for use in moderate pressures, and for higher pressures are of steel, plated with hard materials. For very high pressures the use of solid bars of hard metal is the best wear-resistant solution for both plungers and packings. The disadvantage of the packed plunger design lies in the much larger joint diameters of the static cylinder parts, which require two to three times higher closing forces than the piston ring design. Large cylinders, such as the one shown in Fig. 5.5, require pretensioning of the cylinder bolts to about 10 times the maximum plunger load. This ratio is higher for smaller cylinders.

For piston rings and packed plungers, the optimum number of sealing elements appears to be four or five. In both solutions it is essential that the piston be centered accurately if the seals are to be effective; this is the reason for the guiding ring within the cylinder and for the additional guide at the connection between the piston and driving rod. At the base of the cylinders an additional low-pressure gland allows gas leaks to be collected and the plunger to be flushed and cooled. Other separate glands positioned on the rod connecting the piston to the drive (see Figs. 5.3 and 5.4) prevent the cylinder lubricant from mixing with the crankcase oil, and because the intermediate space is open to the atmosphere, it is impossible for gas to enter the working parts.

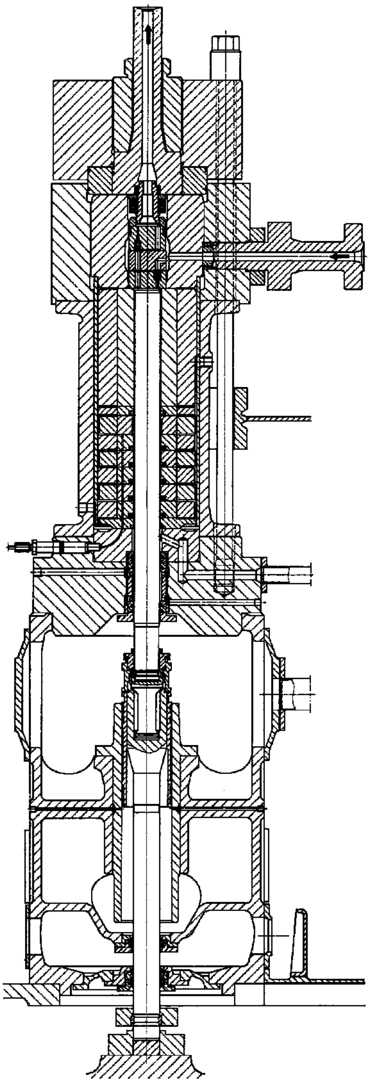

FIGURE 5.5 Gas cylinder for very high end pressures. *(Sulzer-Burckhardt, Winterthur and Basel, Switzerland)*

From the point of view of design and maintenance, piston rings would appear to be the most adequate solution, and they are currently used for pressures up to 2000 atm, or in some circumstances up to 3000 atm. The choice between them and the packed plungers depends largely on the process and type of lubricant used. One difficulty is that normal mineral oils are dissolved by ethylene under high pressure to such an extent that they no longer have any lubricating effect. The glycerine used in earlier machines has been widely replaced by paraffin oil, either pure or with wax additives, which is much less diluted by the gas than other mineral oils. However, it is a rather poor lubricant and is inferior to the various types of new synthetic lubricants, which are generally based on hydrocarbons. The basic difference between piston rings and plunger packings is that the latter may be lubricated by direct injection, while piston rings are lubricated indirectly. This may be an advantage since the low polymers carried by the return gas back from the reactor are reasonably good lubricants. However, too large an amount of low polymers causes the rings to stick in their grooves, and some types of catalyst carriers also brought back by the gas are excellent solvents for lubricants. Thus, the most convenient solution has to be selected for each specific case. In general, for higher delivery pressures (greater than 2000 to 2500 atm), better results are obtained with the use of packed plungers.

5.3 CYLINDER HEADS AND VALVES

It is relatively simple to construct a vessel that will resist 2000 atm, but the problem becomes more intricate when the vessel must withstand, for years, a pressure that fluctuates between 300 and 2000 atm at a frequency of 3 to 4 Hz. The leading idea of the designer must be to divide a complicated problem into a series of simpler problems, each of which is then accessible to accurate methods of investigation. If this is done properly, it is possible to divide a large piece at the very places where inadmissible changes of stresses would occur and to keep the combined strains in each item within tolerable limits. The examples of cylinders shown in Figs. 5.3 through 5.5 illustrate the result of this method. The striking feature is the very simple shape of all pieces subjected to high pressure.

A first obvious result is that suction and delivery valves have to be located in a separate cylinder head. Figure 5.3 shows one type of cylinder head that can be used for moderate pressure fluctuations (up to amplitudes of about 1200 atm) and moderate cylinder dimensions. The intersection of the gas passages with the main bore is located in a small forged core, shrunk in a heavy outer flange, and pressed by the upper cover in the axial direction. This piece has a symmetrical shape with carefully rounded internal edges. By dismantling only the upper cover, it is possible with this design to pull out the complete piston with its rings through the central hole without disconnecting the gas pipes and without removing the valves. A typical valve for this type of cylinder head is shown in Fig. 5.6*a*. The same valve is used on the suction and delivery side, the two end pieces being shaped differently to avoid incorrect assembly. The valve is held against the central head piece by the connection flange of the gas piping as a type of composite lens.

For higher amplitudes of pressure and larger cylinders, cross bores and duct derivations must be taken away from the area of large pressure fluctuations. This is effected by the use of central valves, combining suction and delivery valves into one concentric set. For cylinders of moderate size, this can be done as shown in Figs. 5.4 and 5.6*b*; the different valve elements are located in a succession of simply shaped disks, with the same diameter as the cylinder liner and piled up on top of it. The lower two disks, which have been produced by the shrinking technique, receive the pressure fluctuation in their central hole, while the upper two, which contain the radial bores for the gas connections, are subjected only to static pressure.

For still larger cylinders, the combined valve is assembled as a separate unit to keep compact dimensions and weights and is inserted into the central hole of the cylinder head core, as shown in Fig. 5.5. The two valves illustrated in Fig. 5.6*c* and *d* are designed on the same basic principle; the last one, used in very large cylinders, is fitted with multiple suction and delivery poppets to reduce the moving masses. The entire valve body is subjected to suction pressure on the outside and only to the pressure fluctuations in the longitudinal hole. The suction pipe is connected to the radial bore of the cylinder head core as shown in Fig. 5.5. Separation of suction and delivery pressures is ensured by the circumferential self-sealing ring of hard plastic material, as shown in Fig. 5.6*c* and *d*. The entire valve is pressed on the end of the cylinder liner by the difference of pressures; the plate springs visible in

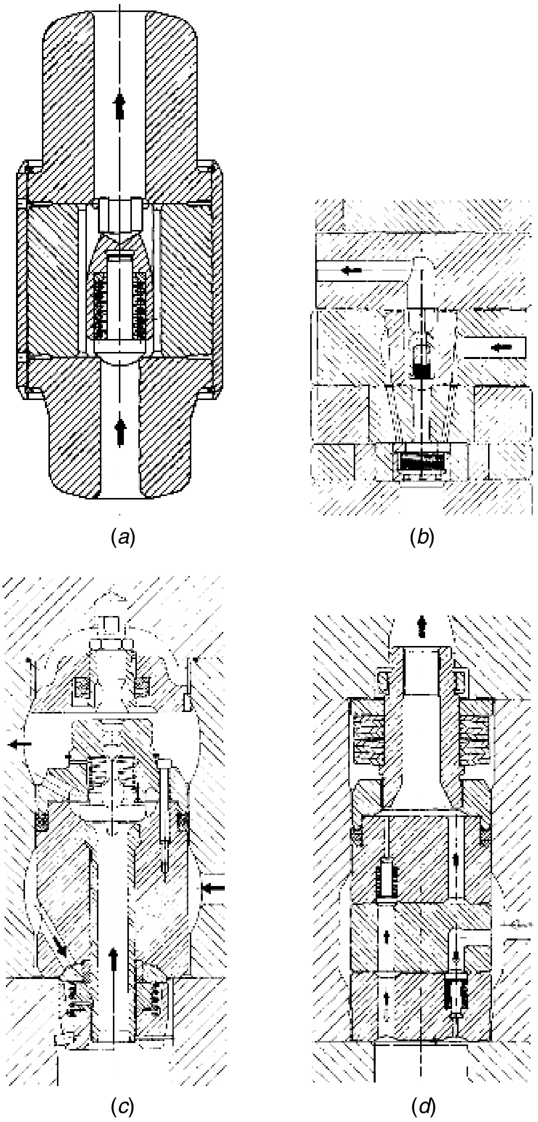

FIGURE 5.6 Different designs of suction and delivery valves for hypercompressors. *(Sulzer-Burckhardt, Winterthur and Basel, Switzerland)*

the figure has only to maintain the valve against pressure drop during periods of operation on bypass. The gas delivery pipe is connected radially to the core piece (like the suction pipe) for moderate delivery pressures and axially for higher pressures (as shown in Fig. 5.5).

All components subjected to high stresses, particularly the internal cylinder elements under high tridimensional fatigue strains, are generally investigated at the design stage by three different methods. The first is a conventional calculation of combined stresses, based on the classical hypotheses, using computer programs as far as convenient. The second approach is that of the frozen stress technique of photo-elasticity applied on resin models cast either on full scale or on slightly reduced scale: It supplies accurate information about the course of the two main stresses in every plane section within the material. The third method is a direct measurement of the superficial stresses by means of strain gauges on the actual component subjected to the full prestressing and internal pressure. A variation of this last method consists of stress measuring on an enlarged model made of a low-modulus material such as aluminum: It provides better information through strain gauges on small rounded edges and allows progressive modification of such places in an attempt to reach an optimum. Comparison of results of these different methods gives a very useful reciprocal check on their exactness and accuracy.

5.4 DRIVE MECHANISM

Different types of driving mechanism are illustrated diagrammatically in Fig. 5.7. The first two (Fig. 5.7*a* and *b*) have been used extensively during the initial period of development and are still applied to smaller units. They are characterized by the fact that high-pressure cylinders have been fitted to frames of conventional design, without substantial modification of the existing equipment. Some manufacturers did not take into account the purely unilateral loading of the crosshead pins—and they generally got into trouble. Others tried to balance the forces by getting additional pistons set under constant or variable gas pressure in the reverse direction; this may work but is a rather unsatisfactory solution because it is expensive and introduces supplementary wearing elements. The best means of application is to use special high-pressure lubrication pumps, fastened to the crossheads and driven by the rocking movement of the connecting rods, which inject the oil directly into the crosshead bearings, thus lifting the pins against the load. This arrangement is well known from the design of large diesel engines, but because the requirements called for higher delivery pressures and larger capacities, the solutions shown in Fig. 5.7*a* and *b* appeared to be increasingly unsatisfactory. Since it is impossible to use double-acting pistons on very high pressures, these designs load the driving mechanism with the full gas pressure (instead of the difference between delivery and suction pressures) and are working only on each second stroke. Although this was still admissible for small units, it proved to be uneconomical for larger ones, and there was obviously a need for more specialized constructions.

The widespread design represented in Fig. 5.7*c* is still based on a conventional application of the horizontally opposed reciprocating compressor, but it avoids the foregoing difficulty by having, on each side of the frame, an external yoke that is connected rigidly to the main crosshead by means of solid connecting bars. A pair of opposed pistons (or plungers) is then coupled to each yoke, which is shaped as an outboard crosshead. Because of the long flexible connecting bars, the movement of the yoke is not disturbed by any transverse force, and it allows a full loading of the drive; thus, this is not a bad solution. However, the compressor is becoming extremely wide, and the accessibility of some of these high-pressure cylinders is rather poor.

All the other systems illustrated in the figure are specially designed solutions: Fig. 5.7*d* and *f* use a rocking beam bound to a fulcrum by a lever, which gives a linear translation of the rotary movement. Figure 5.7*e* uses a moving frame surrounding the crankshaft to connect the crosshead to the piston on the opposite side—a solution already applied for more than half a century to high-pressure pumps; and Fig. 5.7*g* is based on the idea of hydraulic transmission of the driving power. It should be noted that Fig. 5.7*d* may modify the stroke of the crankshaft in a fixed predetermined ratio, that Fig. 5.7*f* reduces the stroke in a fixed ratio, and that Fig. 5.7*g* can perform a variable reduction of the stroke. Although Fig. 5.7*e*

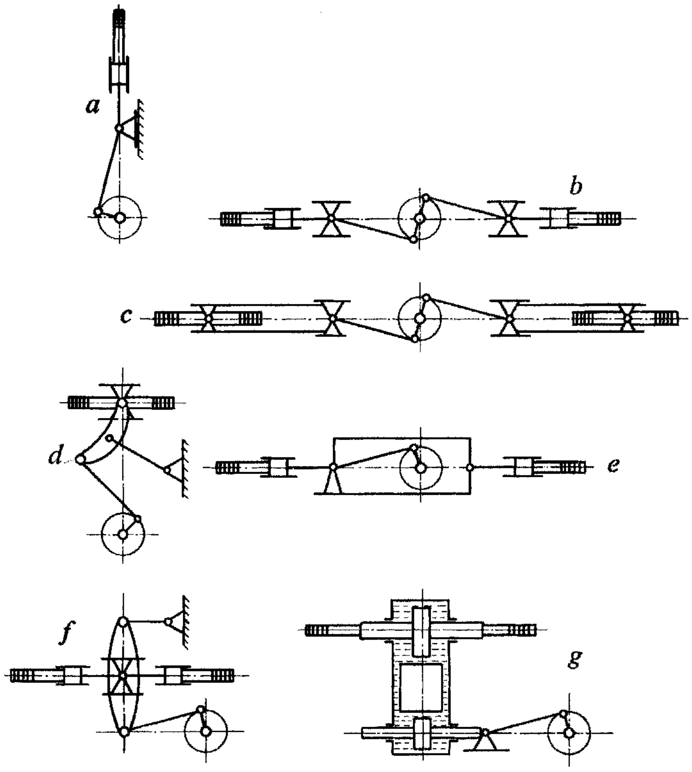

FIGURE 5.7 Various types of driving mechanisms. *(Sulzer-Burckhardt, Winterthur and Basel, Switzerland)*

appears to be the best specific design for a large production compressor, the very special solution of Fig. 5.7*g* is worth further explanation.

Figure 5.8 shows greatly simplified diagram of a basic operation. By means of two reciprocating columns of fluid, a double-acting primary piston operates a secondary piston located above it. A pair of opposed high-pressure gas pistons are coupled to the latter. Although the hydraulic transmission of power could theoretically work as a closed system, it is actually necessary to renew the fluid continuously through forced-feed recirculation, both for the purpose of cooling and to compensate for possible seal leaks. Figure 5.8 shows a low-pressure feeding system; it has also been made as a high-pressure feed. Since this transmission may be built as a hydraulic intensifier, it is possible to use a comparatively light primary mechanism at rather high speed and to reduce the linear speed and increase the forces on the secondary part. Furthermore, by opening a bypass valve between the two fluid columns, the secondary stroke may be reduced. In this manner, stepless output control can be achieved down to zero. Because the fluid pressures on both sides of the pistons vary according to two opposed indicator diagrams, there are two points on each stroke where they will balance. If such a bypass is opened wide on the first of these points, the fluid will transfer theoretically without losses, and the secondary piston will stand still until the valve is closed. In fact, this is one of the very few ways of realizing power-saving capacity control of reciprocating compressors for very high pressures. This output control can be governed automatically, and applying it separately to each compression stage makes it possible to control the intermediate pressure exactly.

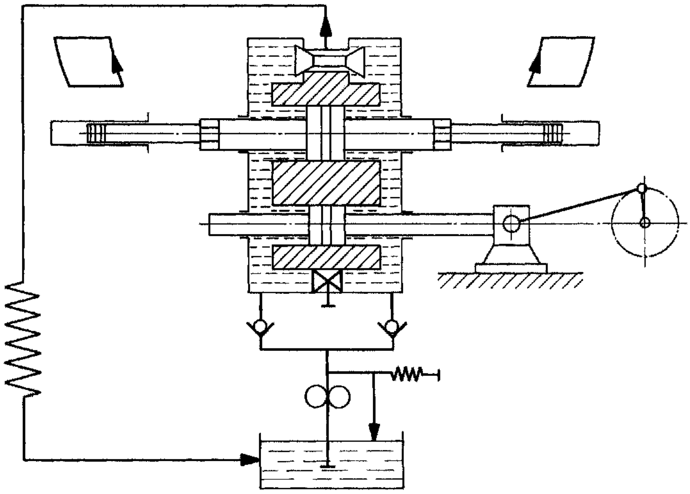

FIGURE 5.8 Hydraulic transmission of power. *(Sulzer-Burckhardt, Winterthur and Basel, Switzerland)*

5.5 MISCELLANEOUS PROBLEMS

The number of problems posed by industrial reciprocating compressors for very high pressures is almost unlimited. Nearly every question of installation or maintenance needs a special study and an original answer, and all elements and accessories require special design and calculation. Only a few of them are mentioned here.

When designing large reciprocating compressors, it is common practice, to take into account the three different types of strains for selecting the most favorable crank-angle arrangement: (1) the resulting forces and moments of inertia acting on the foundations, (2) the resulting torque diagrams under different conditions of operation (important for the cyclic variations of current consumption of the driving motor), and (3) the forces due to pressure pulsations in the gas piping. For most compressors working at lower pressures, this last consideration may be deleted or answered in a summary way at the initial stage of design, because it may be solved by the use of surge drums. In the case of very high pressures, the gas pulsations, which are capable of destroying the piping system, have to be given first priority in the basic investigations, even if it sometimes leads to acceptance of higher-inertia forces.

The most practical ways of studying gas pulsations are to use either an analog computer, which is, in fact, an electroacoustic analogical system where every part is individually adjustable or replaceable, or alternatively, a digital computer study. The first purpose of the analysis is to avoid any resonance between the active systems (the compression cylinders) and the passive systems (the entire piping network); the second purpose is to reduce the amplitudes of the remaining pressure pulsations as far as possible. Theoretically, the means available are (1) change of diameter and of length of the gas piping, (2) removal of pipe connections or adjunction of additional piping, and (3) use of pulsation snubbers and of orifices at well-selected places. In reality, the possibilities are restricted because of the high speed of sound in the gas (1000 to 2000 m/s), because of the very low compressibility of the gas and the very high price of vessels and piping. However, in many cases it has proved easily possible to reduce a dangerous pulsation (e.g., from 25% down to 5%) by inexpensive and simple means.

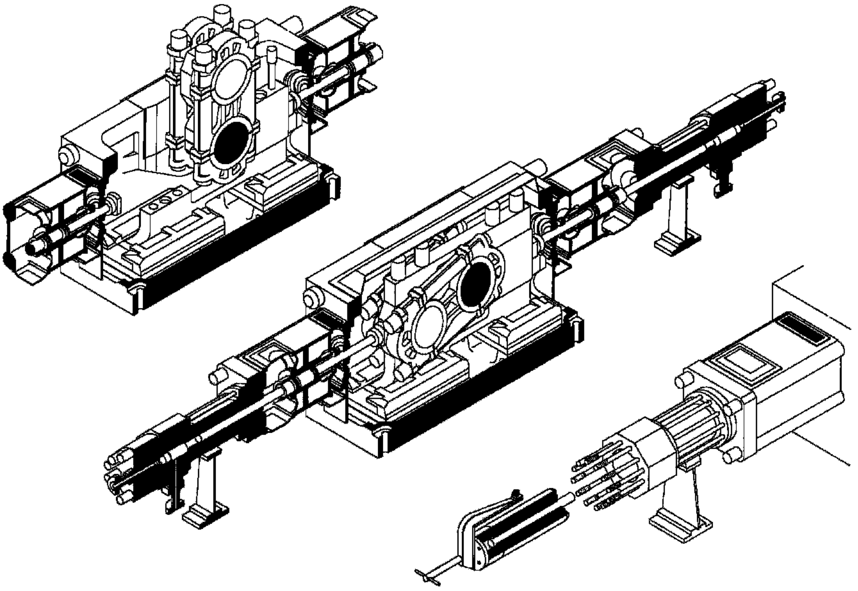

FIGURE 5.9 Large mechanically driven compressor for very high pressures (sectional views). *(Sulzer-Burckhardt, Winterthur and Basel, Switzerland)*

Designers dealing with compressors for very high pressures need to keep in mind at least three basic ideas: (1) safety, (2) large forces (how to apply them), and (3) accessibility. The last two are, of course, chiefly economic, but they are often combined with the aim of safety. For instance, in the design of large compression cylinders, as shown in Fig. 5.5, the long throughbolts connecting the base with the cylinder head are an important safety factor. If, by chance, the gas decomposed in the cylinder, these long bolts, acting as springs, would be elastically lengthened by an appreciable amount without increasing the stresses significantly and would allow the gas to escape between the liner and the head. They must all be equally pretensioned with a very high force. If done by hand, this would be an extremely tiring and time-consuming exercise, and for this reason a hydraulic piston has been incorporated within the cylinder head, which allows, when set under oil pressure, a very quick, easy, and regular tightening and loosening of the bolts. After removal of the outer flange, the entire inside of the cylinder can be removed with the help of a lifting device. It resembles a closed cartridge, as shown in Fig. 5.9. The same figure also shows how major parts of the driving mechanism may be dismantled without removal of the cylinders.

5.6 CONCLUSIONS

Although closely related to other reciprocating compressors, industrial compressors for very high pressures require the construction of a separate group of machines, different in many ways, and call for much greater research, development, and calculation than the others. Being compelled to employ all materials very near their limits of resistance, designers are bound to keep in close contact with the latest developments in material science and many related technologies.

6

METAL DIAPHRAGM COMPRESSORS*

6.1 INTRODUCTION

Gas compressors are mechanical devices that convert energy from one form to another. Energy conversion can be accomplished by the use of different types of machines, but the net result is the same. The pressure of the gas is increased, and therefore the energy level of the gas is increased. All compressors have an element that increases the energy level of the gas. It can take the form of a volume reduction element as in the case of positive displacement compressors or a velocity element as in the case of dynamic compressors.

Metal diaphragm compressors are positive displacement machines in which the compressing element is a metal diaphragm or diaphragm group. The displacing element is a piston having a reciprocating motion within a cylinder. The metal diaphragm reduces (compresses) the volume of the gas causing the gas pressure to be increased. Thermodynamically, this type of compression is considered flow-type work, and it is an adiabatic or polytropic process of a nonideal gas.

6.2 TERMINOLOGY

Metal diaphragm compressors share many basic elements with positive displacement piston compressors. Some terms unique to metal diaphragm compressors are defined below.

- *Cavity*: a contour of either single or multiple radii machined in a flat plate or disk. Contours are machined in both the process and hydraulic cavity plates and are usually

* Developed and contributed by Pressure Products Industries, Inc., Warminster, Pa.

A Practical Guide to Compressor Technology, *Second Edition*, By Heinz P. Bloch

mirror images. The sum of the volume of these two cavities is the displacement of the diaphragm group.

- *Cavity plate*: the plate in which the cavity is machined. Cavity plates are either *process* or *hydraulic.* Process cavity plates also contain cooling passages for removing the heat of compression.
- *Clearance volume (dead volume)*: the volume present in one compressor cylinder or head in excess of the net volume displaced by the piston or diaphragm during the stroke.
- *Diaphragm*: a thin metal membrane that isolates the gas from the hydraulic fluid.
- *Diaphragm group*: a group of three metal diaphragms that isolates the gas from the hydraulic fluid. This group consists of a process, middle, and hydraulic diaphragm. The middle diaphragm contains either grooves or slots radiating from the center of the diaphragm to the circumference of the diaphragm to channel gas or hydraulic fluid to the leak detection groove in the event of a diaphragm failure.
- *Displacement*: the net volume displaced by the piston or diaphragm at the rated machine speed, generally expressed as a volumetric flow rate. For a single-stage compressor, it is only the displacement of the compressing end. For multistage compressors, it is the displacement of the first stage.
- *Head assembly*: the metal diaphragm compressor subassembly containing the cavity plates, support heads, diaphragms, process check valves, O-ring seal sets, and hydraulic piston. Various types of head assemblies are used, depending on the pressure and size of the cavity.
- *Hydraulic injection pump*: a pump attached to an extension of the power frame crankshaft that injects a measured amount of hydraulic fluid into the hydraulic pulsing system at a predetermined time during the suction portion of the compressor cycle.
- *Lock ring*: a threaded member designed to retain the forces (pressure and seal loads) in the metal diaphragm compressor inserted head assembly. The lock ring contains thrust bolts that provide the preload on the head assembly seals.
- *Lower head*: a structural element in which the hydraulic cavity plate sits and the hydraulic piston reciprocates. The part is used on high-pressure diaphragm compressors with intensifier assemblies.
- *Main nut*: a threaded member designed to retain the forces (pressure and seal loads) in the metal diaphragm compressor intensifier head assembly.
- *Pressure limiter*: a device that is used to control hydraulic system volume and pressure so that volumetric efficiency of the metal diaphragm compressor is maximized. *It is not a safety device to protect the compressor or the process system.*
- *Stuffing box*: the main structural member used in inserted and intensifier head assemblies.
- *Support head*: a structural element similar to a flange that supports either the process cavity plate or the hydraulic cavity plate. The upper support head supports the process cavity plate; the lower support head supports the hydraulic cavity plate.

6.3 DESCRIPTION

A metal diaphragm compressor (Fig. 6.1) is a positive displacement compressor. Gases are isolated from the reciprocating and hydraulic parts of the compressor by three thin flexible metal disks called *diaphragms.* The motion of the reciprocating piston is transmitted to the

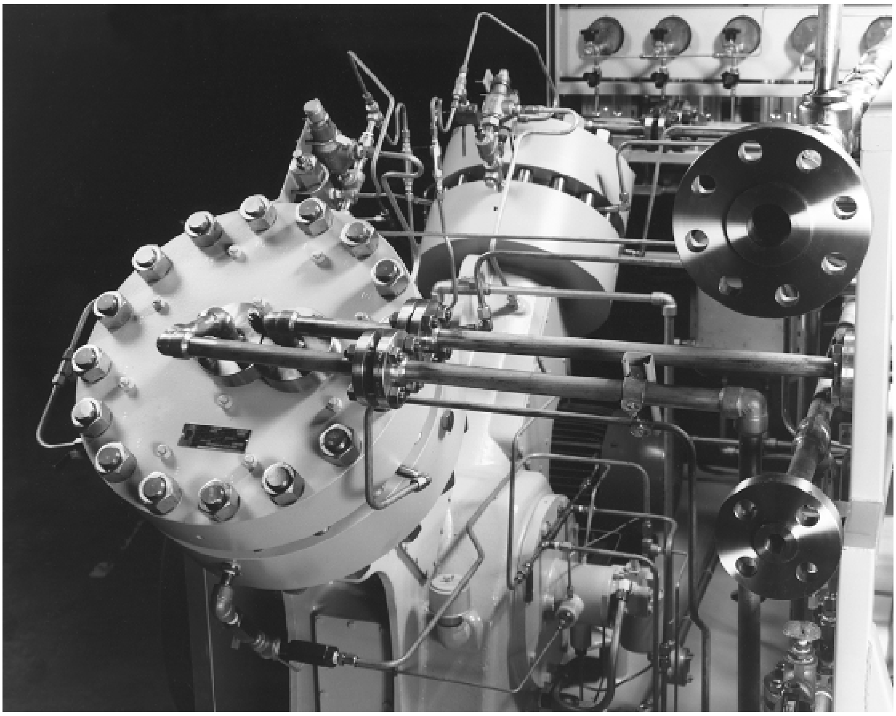

FIGURE 6.1 Metal diaphragm compressor. *(Pressure Products Industries, Inc., Warminster, Pa.)*

diaphragms by the hydraulic fluid. This motion causes the diaphragms to move into the process cavity, thereby reducing the volume and increasing the gas pressure.

The compression cycle of the metal diaphragm compressor is not unlike the positive displacement piston compressor. Both use a reciprocating piston to convert mechanical energy to flow work in the gas. Both use spring-loaded check valves that open only when the proper differential pressure exits across the valve. In each design, the clearance volume (dead volume) influences the volumetric efficiency of the compressor. However, diaphragm compressors differ in the way the compression cycle is managed, although a *p–V* diagram for the two types of compressors would be virtually identical.

The *p–V* diagram for positive displacement piston compressors was shown in Figs. 1.1 through 1.5. Point 1 is the *start of compression,* and the cylinder is filled with gas at the suction pressure. The check valves are closed and the piston is at bottom dead center of its stroke.

On the *compression* portion of the stroke, the piston has moved, reducing the volume in the cylinder with an accompanying rise in pressure (point 1 to point 2). The valves remain closed and the cylinder pressure has reached the upstream piping pressure.

Point 2 to point 3 is the *discharge* or *delivery* portion of the stroke. Compressed gas is flowing out of the discharge check valve and into the discharge piping. When the piston reaches point 3, the discharge valve will close. The piston is at top dead center of its stroke. Gas at pressure P_2 is still in the cylinder.

From point 3 to point 4, the piston is in reversal, the suction and discharge valves remain closed, and the gas trapped in the clearance volume begins to expand, resulting in a pressure reduction. This is the *expansion* portion of the cycle.

The cylinder pressure eventually drops below the suction pressure, P_1 at point 4. The suction valve will then open and gas will flow into the cylinder until the piston reaches the reversal point of its stroke, point 1.

The *p–V* diagram of a metal diaphragm compressor is identical to a piston compressor for the *gas compression cycle.* Differences occur during the compression cycle of the hydraulic fluid. The hydraulic fluid compression cycle, often referred to as the *mechanical compression cycle,* accounts for all pressure changes in a metal diaphragm compressor. A graph of the mechanical compression cycle for a metal diaphragm compressor is shown in Fig. 6.2.

The mechanical compression cycle shown in Fig. 6.2 traces the hydraulic system pressure from the process suction pressure to the process discharge pressure and then to the hydraulic pressure limiter setting and back to the process suction pressure.

Starting at 0° of compressor crankshaft rotation (the reciprocating piston is at bottom dead center), the diaphragm group is fully deflected into the hydraulic cavity plate (Fig. 6.3). The metal diaphragm compressor head assembly is filled with gas at the suction pressure. The check valves are closed. This compares to point 1 on the *p–V* diagram (Fig. 1.5).

On the *compression* portion of the stroke, the hydraulic piston moves from bottom dead center, compressing the hydraulic fluid and forcing the diaphragm group into the cavity in the process cavity plate (Fig. 6.4). Gas volume in the process cavity plate is reduced with an accompanying rise in pressure. The valves remain closed until the process cavity pressure reaches the upstream piping pressure. This compares to points 1 and 2 on the *p–V* diagram.

Compressed gas is flowing out of the discharge check valve and into the discharge piping during the *discharge* portion of the stroke. When the diaphragm group is fully deflected or displaced into the process cavity plate, the discharge check valve will close. This compares to points 2 and 3 on the *p–V* diagram. Gas at pressure P_2 is still in the cylinder.

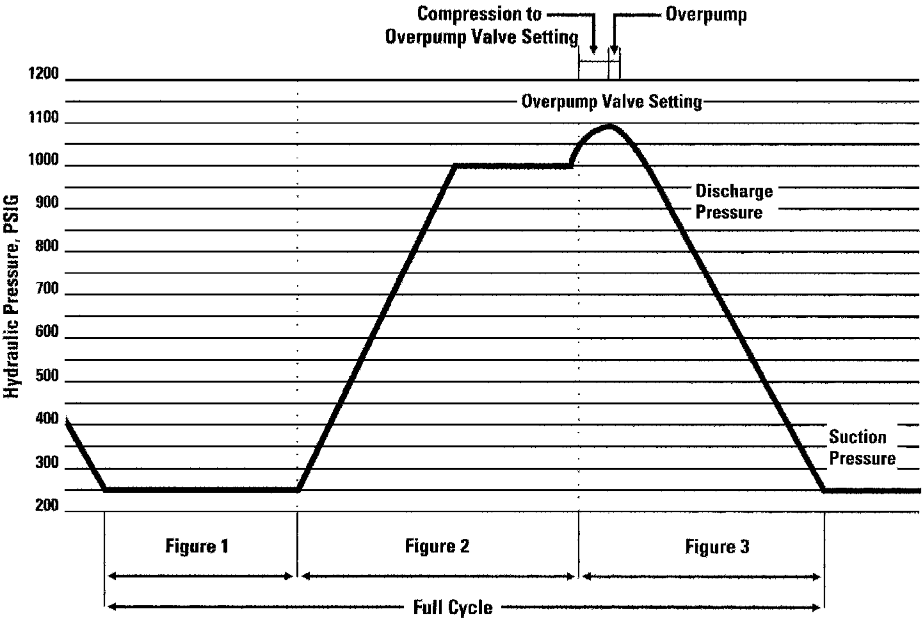

FIGURE 6.2 Mechanical compression cycle for a metal diaphragm compressor. *(Pressure Products Industries, Inc., Warminster, Pa.)*

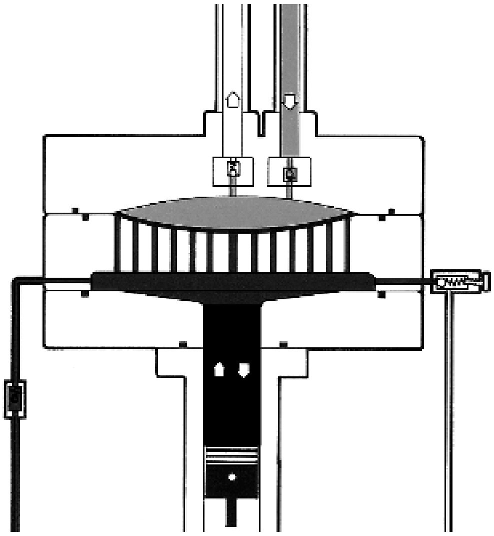

FIGURE 6.3 Diaphragm compressor reciprocating fluid piston at the 0° position. The hydraulic piston is at bottom dead center. The hydraulic system has just been filled with fluid by a single stroke of the automatic injection pump. The process gas, entering through the inlet check valve at suction pressure, has moved the diaphragm group to the bottom of the cavity. The cavity is now filled with the process gas. *(Pressure Products Industries, Inc., Warminster, Pa.)*

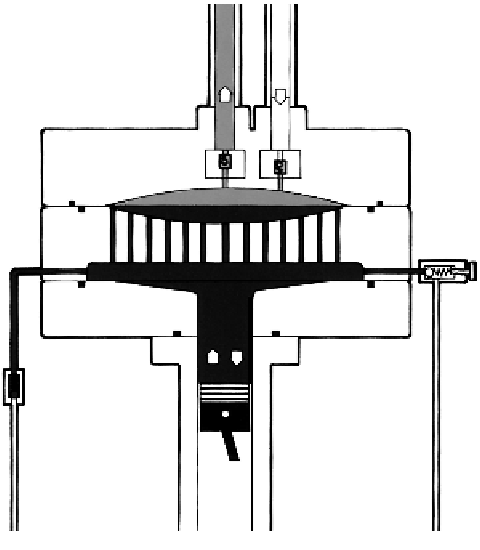

FIGURE 6.4 Diaphragm compressor reciprocating fluid piston advancing. As the crankshaft rotates, the piston moves from bottom to top dead center, and the hydraulic pressure increases. As the hydraulic pressure reaches the pressure level of the process gas in the cavity, the diaphragm group moves toward the top of the cavity, compressing the gas. When the pressure of the process gas within the cavity reaches the pressure level downstream of the discharge check valve, the check valve opens and the gas is discharged. Pressure in the hydraulic system continues to increase, which moves the diaphragm group completely through the cavity, thereby ensuring maximum gas displacement and efficiency. *(Pressure Products Industries, Inc., Warminster, Pa.)*

Differences occur between the metal diaphragm compressor and the positive displacement piston compressor at this point in the cycle. The positive displacement piston compressor would now start its reversal and go into the expansion portion of the cycle. On the other hand, the metal diaphragm compressor hydraulic piston still has a distance to travel since the volume of the hydraulic system is slightly greater than the volume of the process system (Fig. 6.5). The hydraulic system has received extra volume during the suction portion of its stroke from the *hydraulic system injection pump.* This extra volume is required to ensure that the diaphragm group is fully deflected or displaced into the process cavity plate. Without this extra volume, the diaphragm group would never attain full deflection or displacement and therefore would not reach maximum discharge pressure. The volumetric efficiency of the compressor would be reduced because of an increase in the clearance volume. The extra volume is discharged through the hydraulic pressure limiter once the hydraulic system reaches the pressure limiter setting. The extra volume discharged through the hydraulic pressure limiter is called *overpump.*

The expansion cycle of the metal diaphragm compressor begins once the hydraulic pressure limiter has closed and the hydraulic piston has started its reversal. The suction and discharge valves remain closed, and the gas trapped in the clearance volume begins to expand, resulting in pressure reduction. This compares to points 3 and 4 on the *p–V* diagram.

The cavity pressure eventually drops below the suction pressure. The suction valve will then open and gas will flow into the process cavity until the diaphragm group reaches its

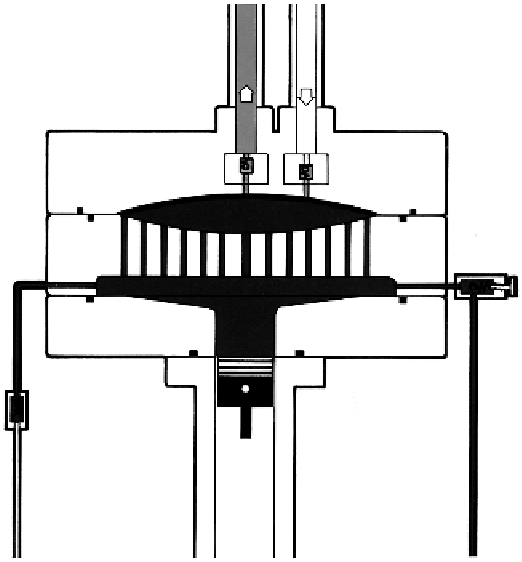

FIGURE 6.5 Diaphragm compressor reciprocating fluid piston at the limit of a stroke. When the diaphragm group has completely moved through the cavity, the piston must travel still farther to reach its top dead center position. As this takes place, hydraulic fluid is forced through the hydraulic overpump valve, which is set at a pressure level higher than the desired discharge process pressure. The compression portion of the cycle is now completed, and the piston begins to move toward bottom dead center. As the hydraulic piston moves toward bottom dead center, the expansion of residual gas combined with gas entering the cavity at suction pressure deflects the diaphragm group toward the bottom of the cavity, and the cycle is complete. *(Pressure Products Industries, Inc., Warminster, Pa.)*

maximum deflection in the hydraulic cavity plate. It is during this phase of the cycle that the hydraulic injection pump will add the extra volume that will eventually become the *overpump* at the end of the discharge portion of the cycle.

The power requirements of a metal diaphragm, it is important to note, are not based solely on the work imparted to the gas. The mechanical energy required during the mechanical compression cycle and the thermodynamic work of the gas compression cycle must both be considered to determine the power requirements of the metal diaphragm compressor.

Figure 6.6 illustrates the head components of a typical metal diaphragm compressor. The head assembly consists of the upper head (process cavity plate), diaphragm group, lower head (hydraulic cavity plate), and lower support head. Not shown is the power frame, which would include hydraulic piston, hydraulic pressure limiter, hydraulic injection pump,

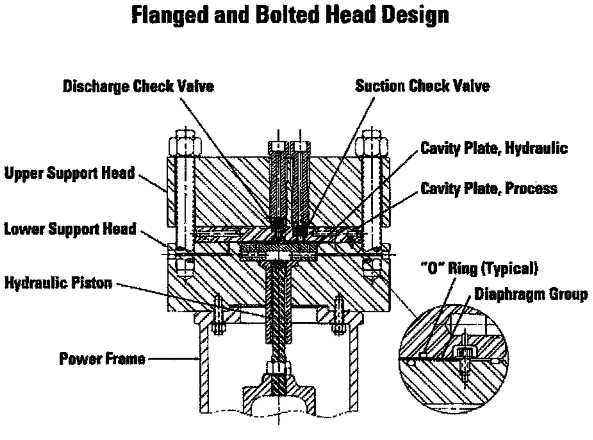

(*a*)

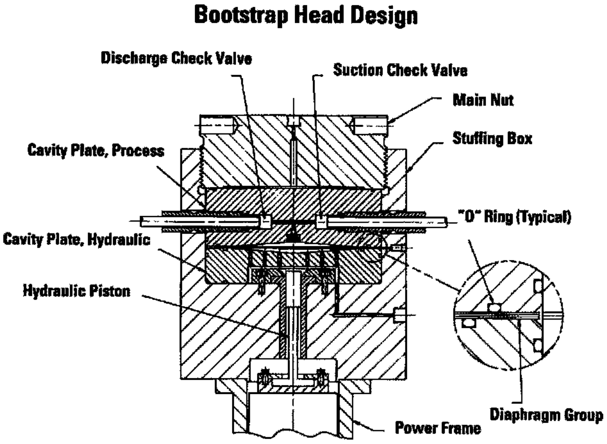

(*b*)

FIGURE 6.6 Diaphragm compressor head designs. (*a*) Represents the simplest and most commonly used design; this is limited to pressures of 5000 psi (345 bar) and below. (*b*) Provides a positive seal with a simple low-torque closure. This design is used when the combination of pressure and diameter make it the most efficient closure. *(Pressure Products Industries, Inc., Warminster, Pa.)*

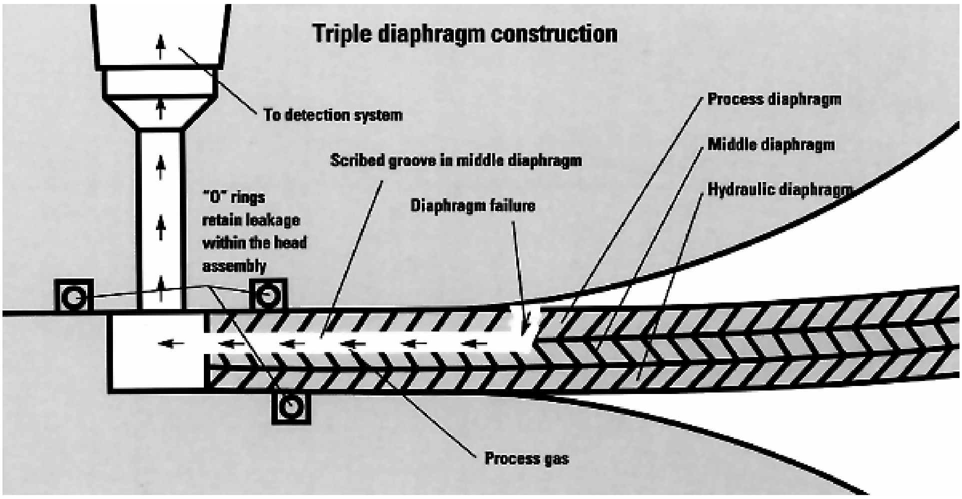

FIGURE 6.7 Triple diaphragm. This construction can be combined with suitable instrumentation to detect diaphragm failure rapidly. *(Pressure Products Industries, Inc., Warminster, Pa.)*

and suction and discharge check valves. Triple diaphragm construction and the leak detection port are shown enlarged in Fig. 6.7. Note the static O-ring seals for the process side, hydraulic side, and secondary containment seal.

Diaphragm compressors compress gas with no contamination and virtually no leakage. More specifically, leakage is less than 1×10^{-5} standard mL/s helium with O-ring seals. Rates of less than 1×10^{-7} can be obtained with metal-to-metal seals.

Under normal operating conditions, the gas is completely isolated from the hydraulic fluid by the diaphragm group. This permits toxic, flammable, pure, or expensive gas to be compressed safely, without contamination or leakage. Triple diaphragm construction ensures product purity since the three diaphragms will continue to isolate the gas from the hydraulic fluid, even under abnormal conditions such as a diaphragm or seal failure. The leak detection system retains any effluent during abnormal conditions. The system senses any diaphragm or seal abnormality and gives the operator a visual indication and shutdown or alarm capabilities by use of the system pressure switch.

Metal diaphragm compressors are usually available in single- and two-stage models. Most compressor displacements range from 0.032 to 110.8 cfm (0.054 to 188.27 m^3/h) based on an operating speed of 400 rpm. Standard discharge pressures range from 25 to 30,000 psi (172 kPa to 207 MPa).

7

LOBE AND SLIDING VANE COMPRESSORS

Lobe-type* or rotary positive blowers, also called *rotary piston machines* or *gas pumps,* are intended for use with steam and noncorrosive gases. Basic models (Figs. 7.1 and 7.2) are usually designed with integral shaft ductile iron impellers (Fig. 7.3) that have an involute profile. The alloy steel timing gears are taper mounted on the shafts, and cylindrical roller bearings are generally used. Both ends of the unit are splash oil lubricated. The casing, headplates, gear cover, and end cover are typically made of gray cast iron. Piston ring seals form a labyrinth between the compression chamber and cored vent cavities. The vent cavities are valved for purge or drain.

On many modern lobe machines, high-performance mechanical seals are installed at each bearing to control gas and oil leakage and are suitable for vacuum or pressure service (Fig. 7.4). Some models of lobe blowers or gas pumps incorporate a proprietary design that reduces noise and power loss by using an exclusive wraparound flange and jet to control pressure equalization, eliminating rapid backflow of gas into the pump from the discharge area.

The operating principle of lobe machines is illustrated in Fig. 7.5. Incoming gas (right) is trapped by impellers. Simultaneously, pressurized gas (left) is being discharged (*a*). As the lower impeller passes the wraparound flange, a portion of the gas (white arrow) equalizes pressure between trapped gas and discharge area, thus aiding impeller movement and reducing power (*b*). The impellers now move gas into the discharge area (left). Backflow is controlled, resulting in reduction of noise relative to conventional gas pumps (*c*).

Main fields of application for rotary piston blowers, or lobe machines, are pneumatic conveying plants for bulk materials in vacuum and pressure operating systems. The smallest

---

* Based on information provided by Aerzen USA Company, Coatesville, Pa., and Dresser Industries, Inc., Roots Division, Connersville, Ind.

A Practical Guide to Compressor Technology, Second Edition, By Heinz P. Bloch

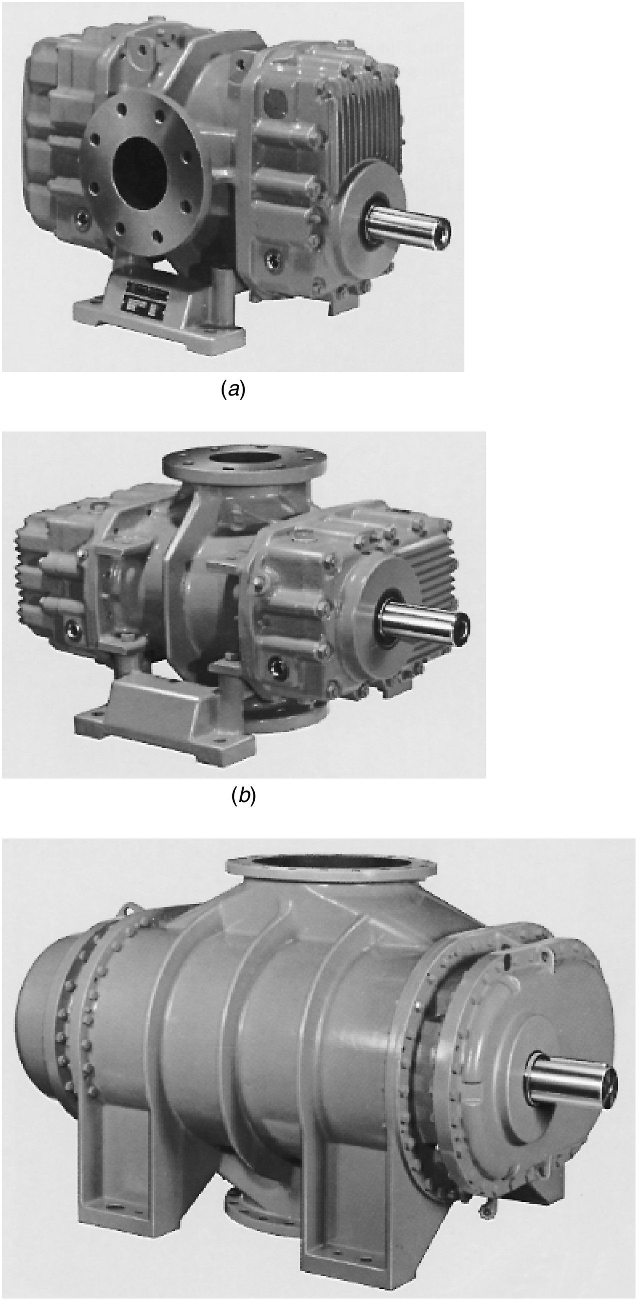

FIGURE 7.1 Typical small-to-moderate-sized lobe blowers. *(Aerzen USA Company, Coatesville, Pa.)*

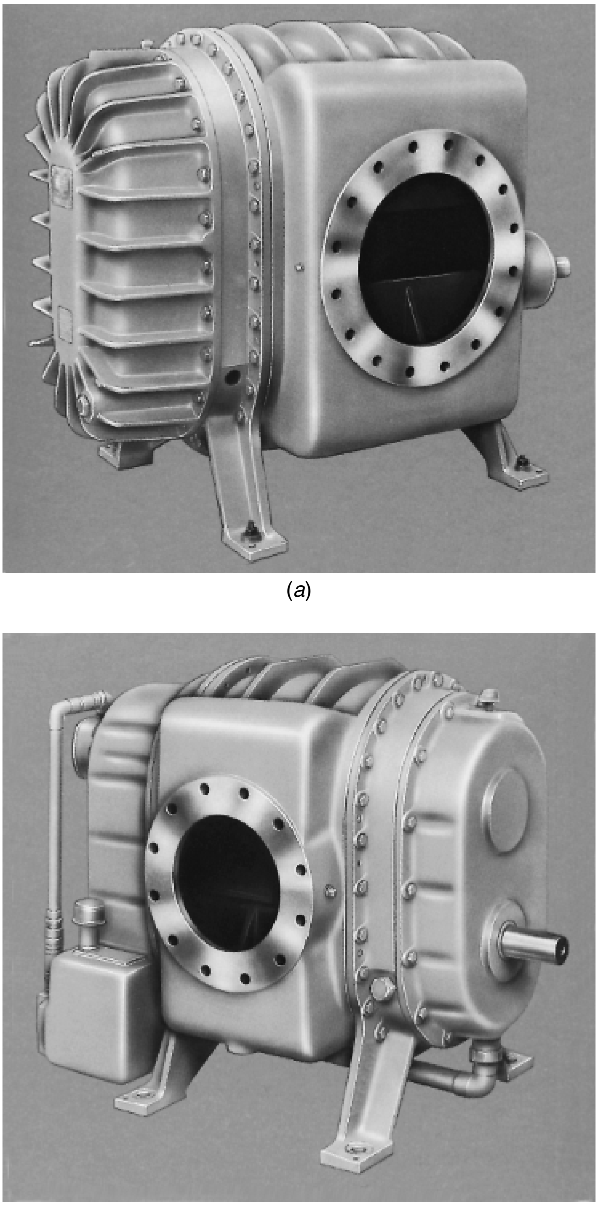
(*a*)

(*b*)

FIGURE 7.2 Basic lobe blowers. *(Dresser Industries, Inc., Roots Division, Connersville, Ind.)*

blowers are mounted on bulk-carrying vehicles; the largest machines (Fig. 7.6) are used in pneumatic elevators for unloading of vessels. The hourly output of these plants is up to 1000 tons. Another frequent application is in aeration ponds of sewage treatment plants. Other lobe machines are found in power plants or facilities requiring high-pressure gas circulation with pressure-tight machines up to a maximum of 25 bar internal pressure. Typical pressure rise capabilities are 12 psi (0.8 atm).

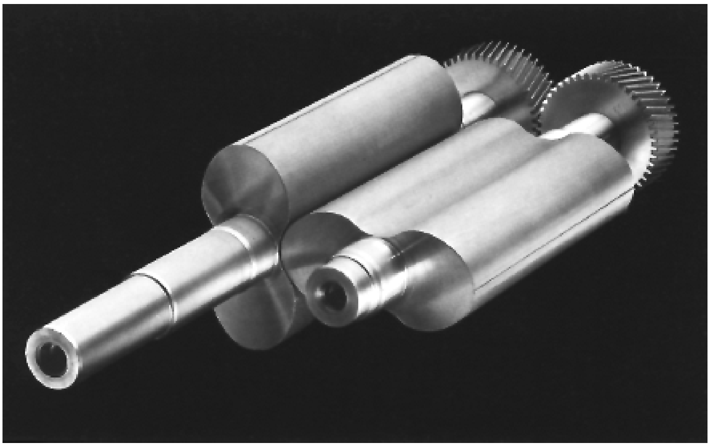

FIGURE 7.3 Integral shaft ductile iron rotors and impellers for lobe blowers. *(Aerzen USA Company, Coatesville, Pa.)*

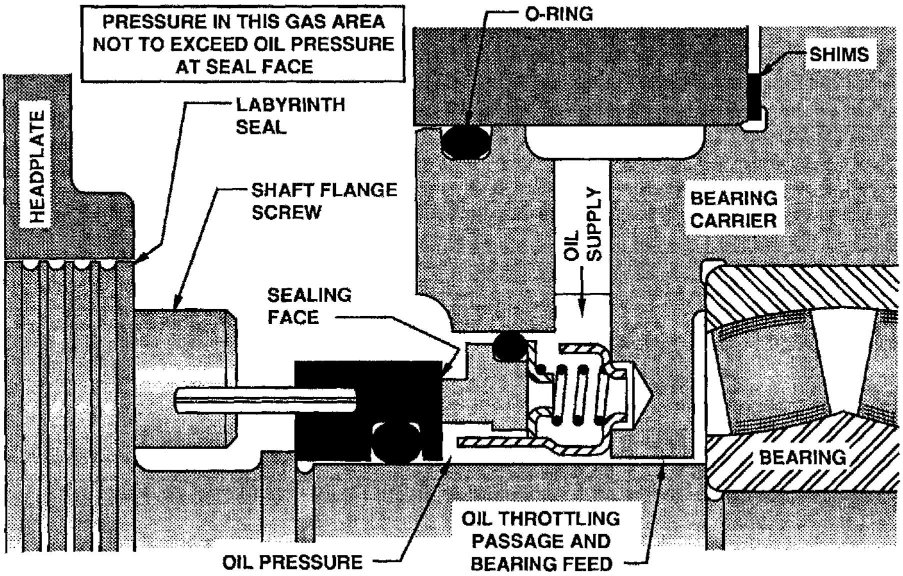

FIGURE 7.4 Mechanical seal installed on a modern lobe blower. *(Dresser Industries, Inc., Roots Division, Connersville, Ind.)*

A large variety of sizes and models cover the capacity range from 30 to 85,000 m^3/h (approximately 18 to 50,000 cfm). Drivers include electric motors, internal combustion engines, and hydraulic motors.

Sliding vane compressors* (Fig. 7.7) are typically found in such applications as air blast hole drilling, pneumatic conveying, chemical and petroleum vapor recovery, gas transmission,

---

* Based on information provided by A-C Compressor Corporation, Appleton, Wis.

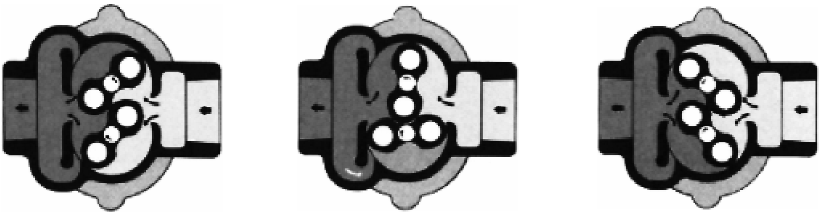

Incoming gas (right) is trapped by impellers. Simultaneously, pressurized gas (left) is being discharged.

(*a*)

As lower impeller passes wraparound flange, Whispair jet (white arrow) equalizes pressure between trapped gas and discharge air, aiding impeller movement and reducing power.

(*b*)

Impellers move gas into discharge area (left). Backflow is controlled, resulting in reduction of noise relative to conventional gas pumps.

(*c*)

FIGURE 7.5 Operating principle of lobe blowers. *(Dresser Industries, Inc., Roots Division, Connersville, Ind.)*

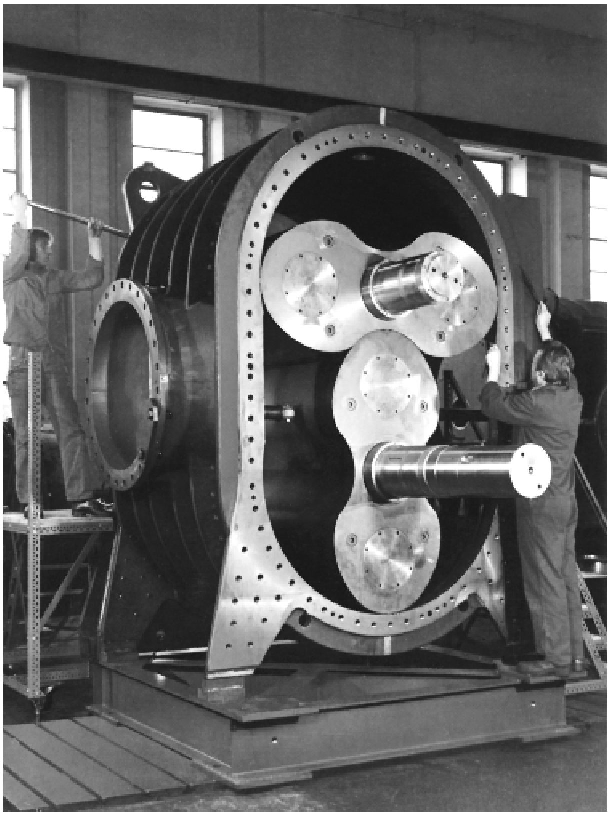

FIGURE 7.6 Large lobe rotary piston blower. *(Aerzen USA Company, Coatesville, Pa.)*

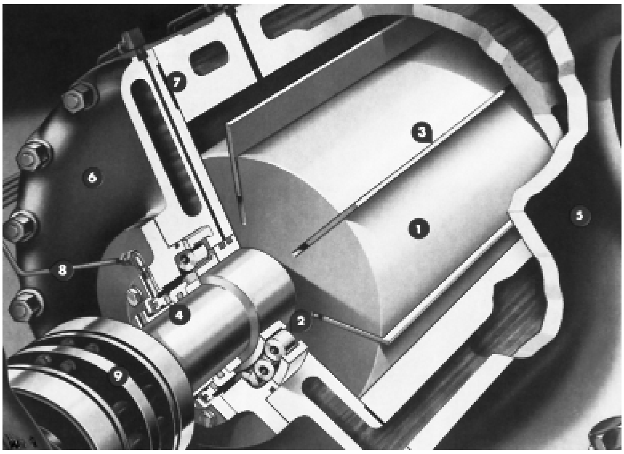

FIGURE 7.7 Sliding vane compressor and principal components: rotor and shaft (1), bearings (2), blades (3), mechanical seals (4), cylinder and housing (5), heads and covers (6), gaskets (7), lube supply line (8), coupling (9). *(A-C Compressor Corporation, Appleton, Wis.)*

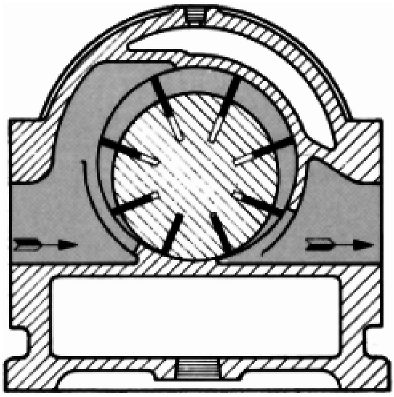

FIGURE 7.8 Operating principle of a sliding vane compressor. *(A-C Compressor Corporation, Appleton, Wis.)*

and small plant air systems. Each unit has a rotor eccentrically mounted inside a water-jacketed cylinder. The rotor is fitted with blades that are free to move radially in and out of longitudinal slots. These blades are forced out against the cylinder wall by centrifugal force. Figure 7.8 illustrates how individual cells are thus formed by the blades, and the air or gas inside these cells is compressed as the rotor turns.

Sliding vane compressors are available in single- and multistage geometries. Typical single-stage capacities are ranging through 3200 cfm and 50 psig; two-stage compressors deliver pressures from 60 to 150 psig and flows up to approximately 1800 cfm.

8

LIQUID RING COMPRESSORS

Liquid ring compressors (Fig. 8.1) represent a subgroup of the two major compressor categories, dynamic and displacement. Since these machines use a liquid to displace gases, they are often classified as volumetric compressors with liquid displacers. Although considerably larger machines have been produced, the overwhelming majority fit in the size range where 15- to 150-kW drivers are needed to compress gases to about 100 psig, or approximately 7 bar discharge pressure (Fig. 8.2).

In general, liquid ring compressors are the functional equivalent of liquid ring pumps. The principal difference is double-lobe construction in a compressor, which balances radial forces imposed on the rotor (Figs. 8.3 and 8.4). Liquid ring compressors tolerate carryover, as incoming soft solids and liquids are cushioned by the seal liquid and washed through to discharge. Liquid ring air compressors sealed with water actually scrub out particles as small as airborne bacteria with high efficiencies.

That portion of the seal liquid that passes on through the pump is removed from the discharge stream by a separator, which the compressor manufacturer furnishes as part of the system. A continuous supply of makeup seal liquid maintains the rotating ring. Liquid from the separator is usually cooled and recirculated to provide this makeup supply.

Heat of compression raises seal liquid temperature only about 10 to 15°F during its passage from makeup to discharge, and temperatures inside a liquid ring compressor remain far below the peaks that adiabatic compression would produce. If the gas mixture is explosive, the liquid ring compressor can serve as a flame arrester when it is sealed with a nonflammable liquid such as water.

If the inlet gas mixture contains vapors that will condense at seal liquid temperature, a capacity bonus is obtained. Vapor condensation reduces the volume that the pump or compressor must handle. Condensate flows out along with discharged seal liquid, and accumulated excess liquid is then drawn out of the separator system.

A Practical Guide to Compressor Technology, Second Edition, By Heinz P. Bloch

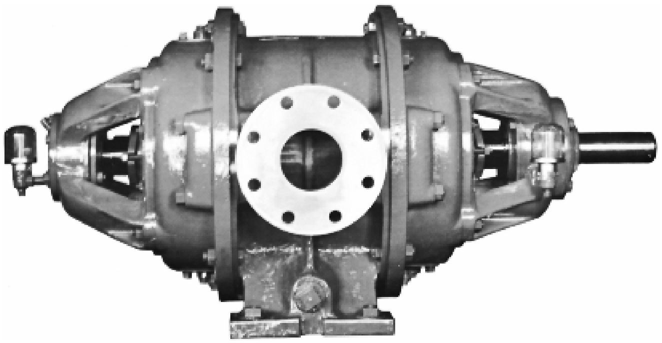

FIGURE 8.1 Liquid ring compressor. *(Nash Engineering Company, Norwalk, Conn.)*

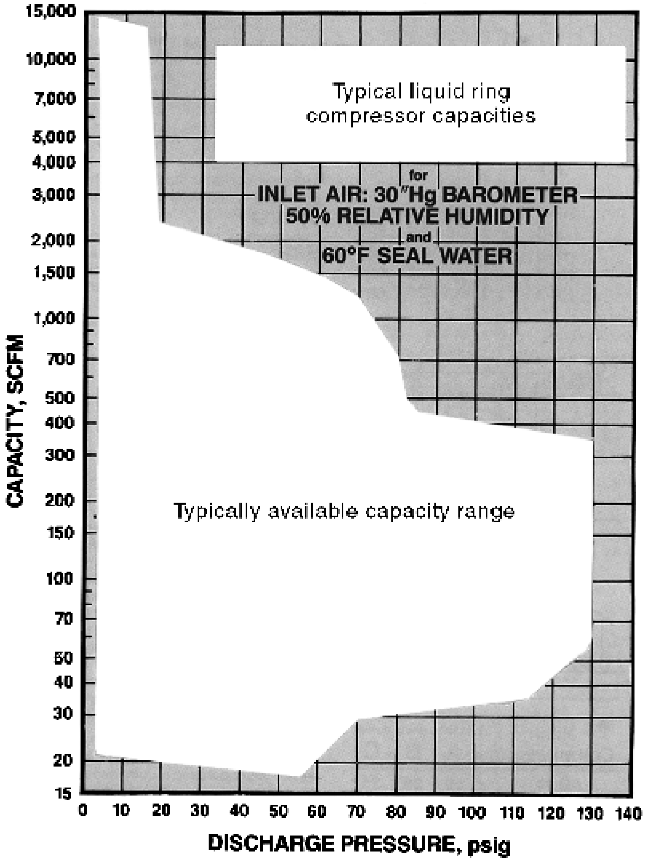

FIGURE 8.2 Typical capacity field for modern liquid ring compressors. *(Nash Engineering Company, Norwalk, Conn.)*

Water is an excellent seal liquid and is most often used for its convenience. There are many situations, though, in which some other liquid yields important advantages. Some products cannot tolerate even trace amounts of water. If condensate recovery is desired, that same liquid, or one compatible with it, may be used as the seal liquid. Sometimes, a

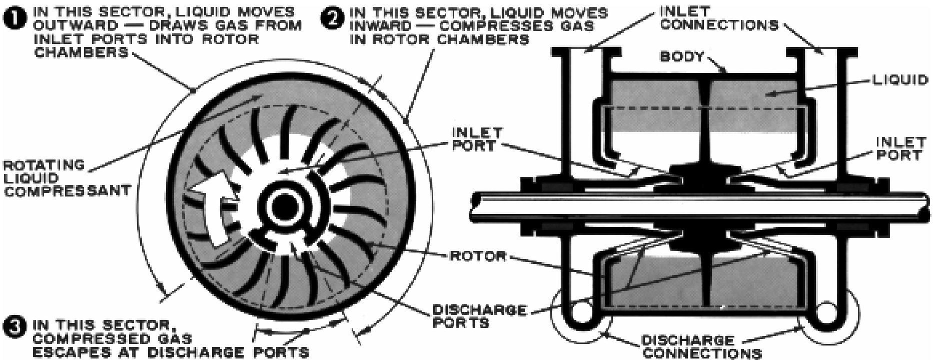

FIGURE 8.3 Functional schematic of a liquid ring compressor with a circular casing. *(Nash Engineering Company, Norwalk, Conn.)*

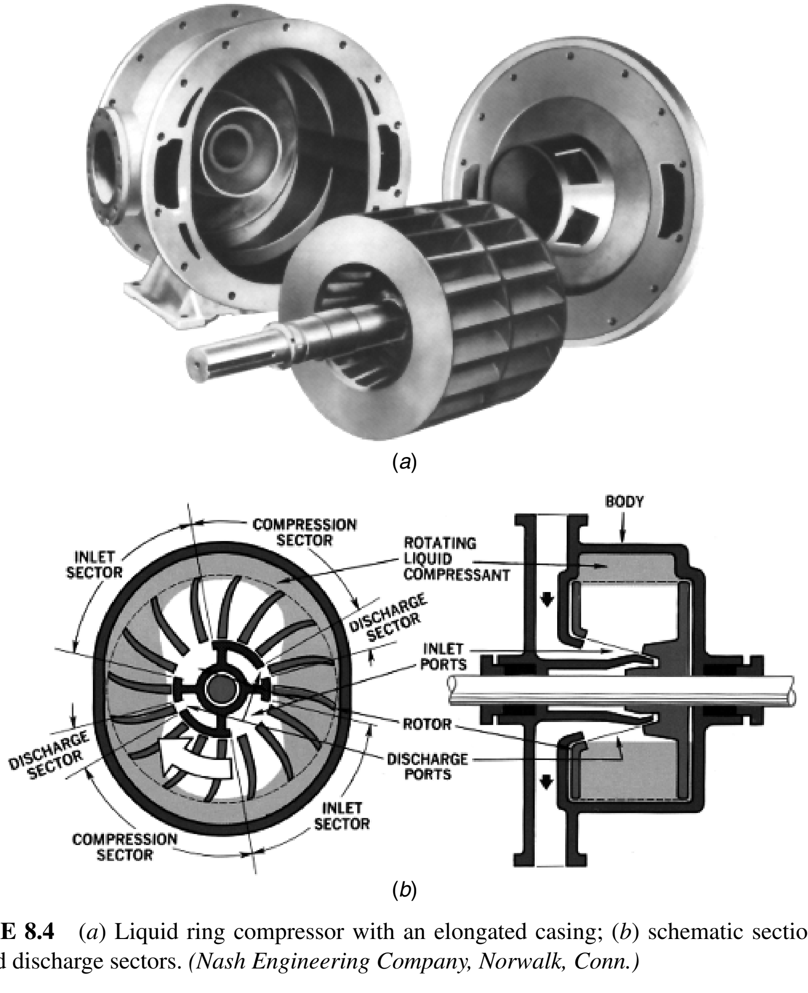

FIGURE 8.4 (*a*) Liquid ring compressor with an elongated casing; (*b*) schematic section at the inlet and discharge sectors. *(Nash Engineering Company, Norwalk, Conn.)*

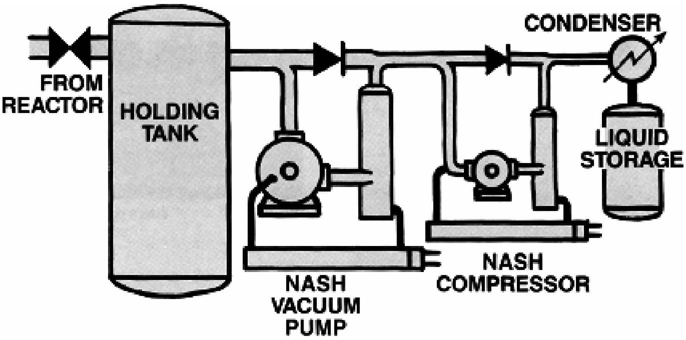

FIGURE 8.5 Vinyl chloride recovery system using liquid ring equipment. *(Nash Engineering Company, Norwalk, Conn.)*

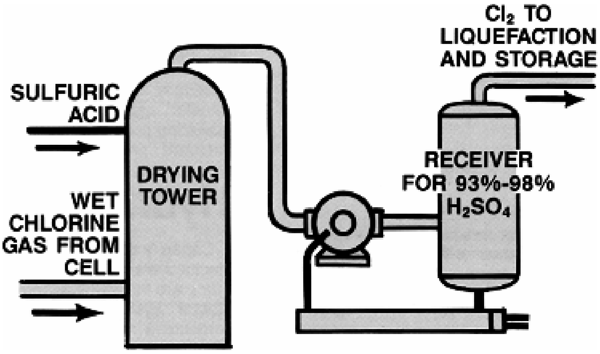

FIGURE 8.6 Corrosive gas compression system using a liquid ring compressor. *(Nash Engineering Company, Norwalk, Conn.)*

liquid that inhibits the attack of a corrosive gas mixture will improve equipment service life or make costly construction unnecessary. If low-temperature cooling is not available, the seal liquid's vapor pressure may limit the vacuum attainable. In that case, an oil seal or engineered synthetic fluid can eliminate the need for cooling water and will extend the vacuum range.

Common but greatly simplified arrangement drawings are shown in Figs. 8.5 through 8.7. Figure 8.5 represents a monomer recovery system. In one of several batch monomer recovery systems, unreacted polyvinyl chloride (PVC) is first transferred into the evacuated holding tank. A liquid ring vacuum pump scavenges gas out of the PVC and delivers it to the compressor inlet at or near atmospheric pressure. The single-stage compressor then compresses the gas for condensation and storage as a pressurized liquid.

A corrosive gas compression system is depicted in Fig. 8.6. This layout and equipment choice minimizes the attack of corrosive gases on compressors and vacuum pumps, often without resorting to the use of expensive construction materials. Selecting appropriate seal liquids plays a part in this success. As one of many examples, concentrated sulfuric acid is used as the seal liquid in many liquid ring compressors handling chlorine gas. Another approach is used with dry hydrogen chloride gas, which is compressed with an oil seal. Water is used to seal stainless steel compressors handling carbon dioxide, sulfur dioxide, or hydrogen sulfide.

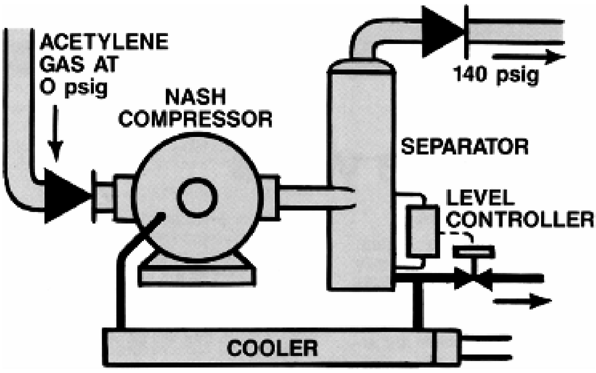

FIGURE 8.7 Explosive gas compression system using a liquid ring compressor accommodates a 10 : 1 compression ratio in a single stage. *(Nash Engineering Company, Norwalk, Conn.)*

Typical of arrangements for handling dangerously explosive gases, the compressor system shown in Fig. 8.7 keeps acetylene cool and saturated with water, which is used as the seal liquid. Tests with intentionally propagated explosions both upstream and downstream of liquid ring compressors confirm that they can function effectively as flame arresters. A single-stage liquid ring compressor can handle a discharge pressure as high as 140 psig (9.5 bar). It should be noted that multistage compression is available for higher discharge pressures.

9

ROTARY SCREW COMPRESSORS AND FILTER SEPARATORS

9.1 TWIN-SCREW MACHINES

Rotary screw compressors are typically configured as shown in Figs. 9.1 through 9.4. Two counterrotating helical screws are arranged in a compressor casing; gas inlet and discharge nozzles are at opposite ends. Three-, four-, and five-lobe rotors are produced (Fig. 9.5).

9.1.1 Working Phases

The screw compressor is a positive displacement machine and as such has distinct working phases: suction, compression, and discharge. We will limit our description of the working phases to just one lobe of the male rotor and one interlobe space in the female rotor. Once the operation is understood, it is not particularly difficult to envision the relative interaction of all of the lobes and interlobe spaces with resulting uniform, basically nonpulsating, continuous gas flow through the compressor.

The suction phase is depicted in Fig. 9.6*a.* As the lobe of the male rotor begins to unmesh from an interlobe space in the female rotor, a void is created, and gas is drawn in through the inlet port. As the rotors continue to turn, the interlobe space increases in size, and gas flows continuously into the interlobe space. The inlet port is large, and the filling takes place over a large portion of each rotation. Just prior to the point at which the interlobe space leaves the inlet port of the suction end, the entire length of the interlobe space is open from end to end—the lobes and interlobe space being completely unmeshed. The interlobe space is thus completely filled with drawn-in gas.

The transfer phase is a transitional phase between suction and compression where the trapped pocket of gas within the interlobe space is isolated from inlet and outlet ports and is merely transported radially through a fixed number of degrees of angular rotation at constant suction pressure.

A Practical Guide to Compressor Technology, Second Edition, By Heinz P. Bloch

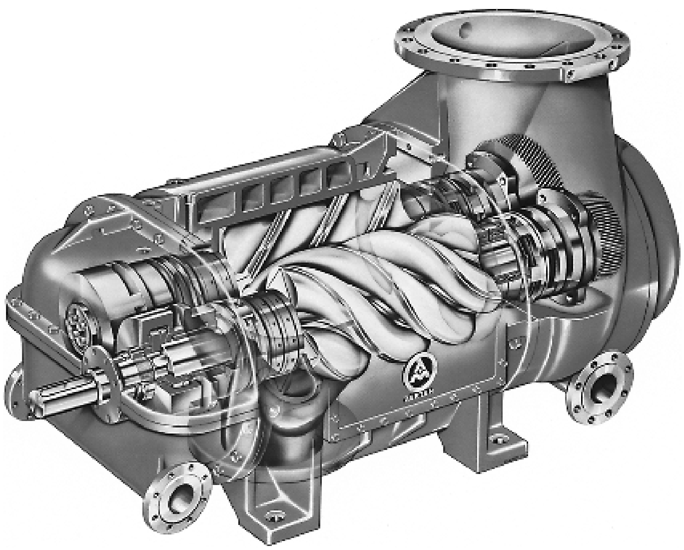

FIGURE 9.1 Rotary screw compressor (double-helical-screw machine). *(Aerzen USA Company, Coatesville, Pa.)*

FIGURE 9.2 Small packaged rotary screw compressor. *(Aerzen USA Company, Coatesville, Pa.)*

Figure 9.6*b* shows the compression phase. As can be seen, further rotation meshes a male lobe (not the same lobe as disengaged previously because of the 4 : 6 relationship) with the gas-filled interlobe space on the suction end and compresses the gas in the direction of the discharge port. The meshing point moves axially from the inlet to the discharge end; thus, the occupied volume of the trapped gas within the interlobe space is decreased and the gas pressure consequently increased.

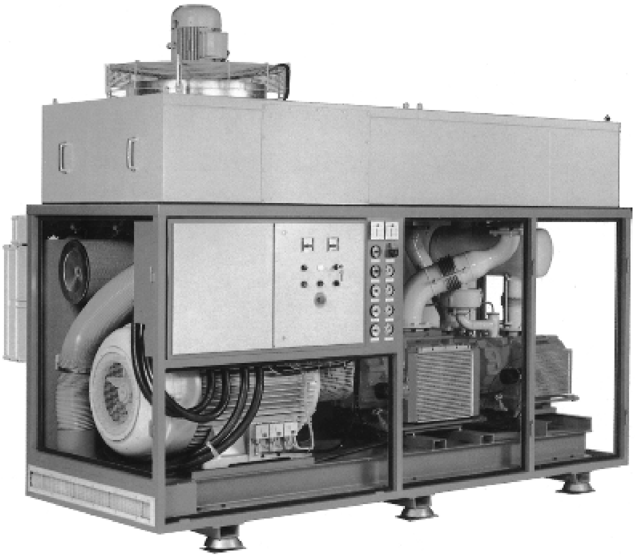

FIGURE 9.3 Medium-sized rotary screw compressor package. *(Aerzen USA Company, Coatesville, Pa.)*

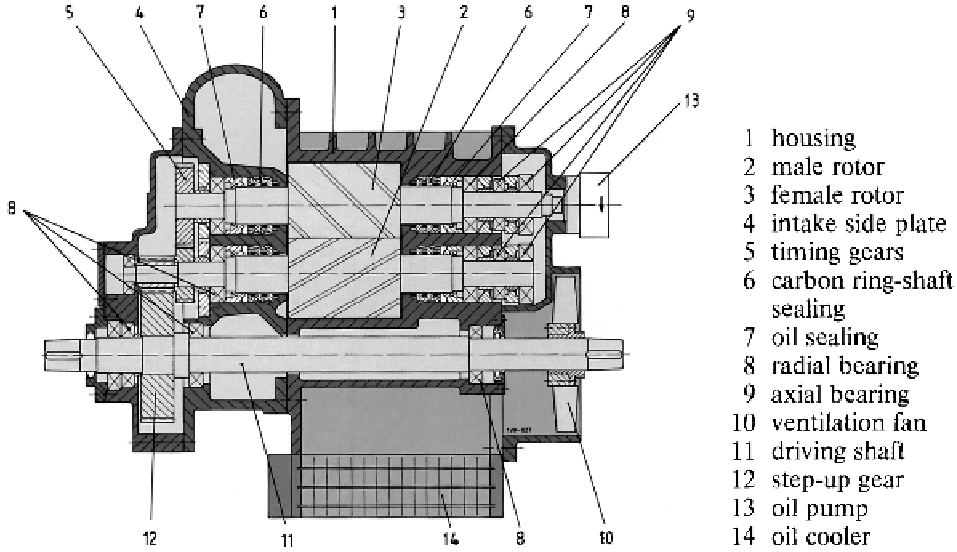

FIGURE 9.4 Oil-free rotary screw compressor with integral step-up gears. *(Aerzen USA Company, Coatesville, Pa.)*

The discharge phase is illustrated in Fig. 9.6*c*. At a point determined by the designed built-in compression ratio, the outlet port is uncovered, and the compressed gas is discharged by further meshing of the lobe and interlobe space. While the meshing point of a pair of lobes is moving axially, the next charge is being drawn into the unmeshed portion, and thus the working phases of the compressor cycle are repeated.

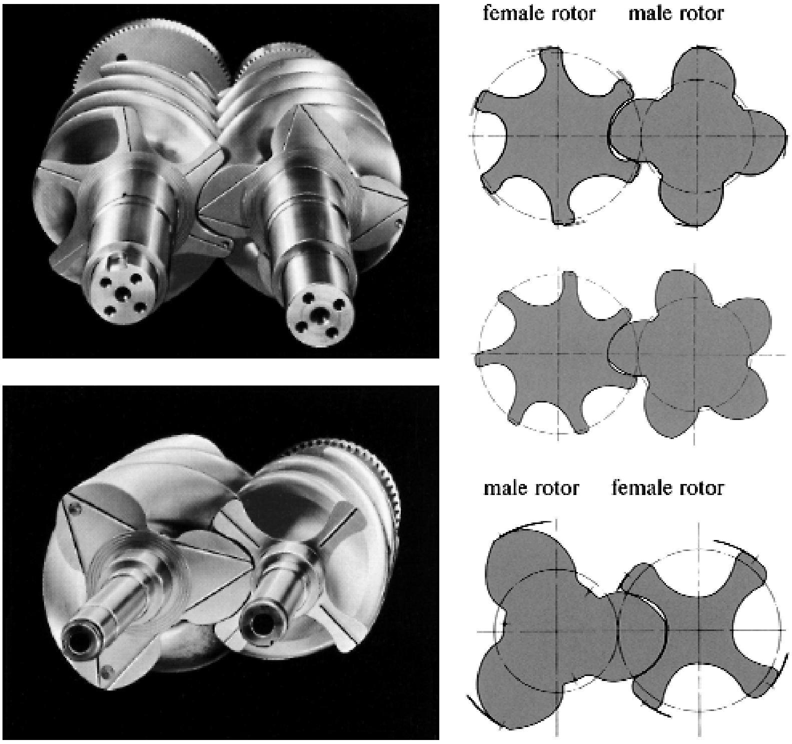

FIGURE 9.5 Typical screw compressor rotor combinations. *(Aerzen USA Company, Coatesville, Pa.)*

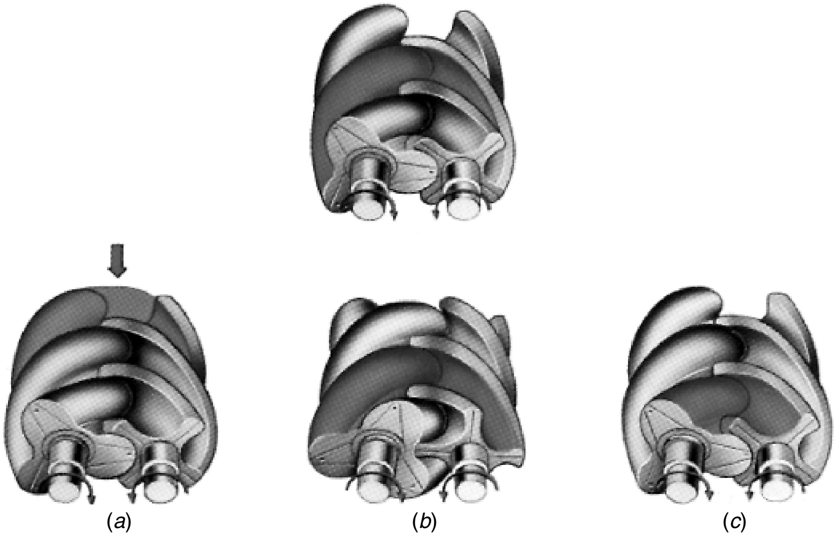

Suction intake Gas enters through the intake aperture and flows into the helical grooves of the rotors which are open.

Compression process As rotation of the rotors proceeds, the air intake aperture closes, the volume diminishes and pressure rises.

Discharge The compression process is completed, the final pressure attained, the discharge commences.

FIGURE 9.6 Working phases of rotary screw compressors. *(Aerzen USA Company, Coatesville, Pa.)*

9.1.2 Areas of Application

Rotary screw compressors have been around for many decades and are very likely the equipment of choice for either oil-free or oil-wetted compression of air in mining, construction, industrial refrigeration, and a host of other applications where their relative simplicity, general reliability, and high availability are appreciated.

What is less well known is that rotary screw machines are equally suited to compress such process gases as ammonia, argon, ethylene, acetylene, butadiene, chlorine, hydrochloric gas, natural and synthetic pipeline gases, flare gas mixtures, blast furnace gas, swamp and biomass gases, coke oven or coal gas, carbon monoxide, town gas, methane, propane, propylene, flue gas, crude or raw gas, sulfur dioxide, nitrous oxide, vinyl chloride, styrene, and hydrogen.

Modern sealing and liquid injection technology has been partly responsible for making rotary screw units capable of competing in applications previously reserved for other compressor types. As a result of sophisticated contour machining and enhanced metallurgy, single- or multistage rotary screw compressors today cover a range of suction volumes from 300 to 60,000 std m^3/h (176 to 35,310 scfm), with discharge pressures up to 40 bar (580 psi). For vacuum applications, an absolute pressure of 0.09 bar (1.3 psia) is achievable.

9.1.3 Dry vs. Liquid-Injected Machines

Two slightly different types of rotary screw compressors can be employed in process plants: dry machines and wet liquid-injected units. Liquid-injected rotary screw compressors are further divided into oil-injected machines and machines using other liquids.

Dry compressors typically use shaft-mounted gears to keep the two rotors in proper mesh. Prevalent in the pharmaceutical and high-purity chemical industries, these machines may also be used in aeration services in the brewing industry and other applications where complete absence of entrained air and other contaminants is mandatory.

Oil-injected rotary screw compressors are generally supplied without timing gears. Other liquid-injected compressors usually require gearing to keep the two counter-rotating screws in the proper mesh. The injected liquid could be water, a heat-removing fluid, or some other liquid. In oil-injected machines, the lubricant provides a layer separating the two screw profiles even as one screw drives the other. All liquid-injected machines offer the following advantages:

- The liquid injected provides internal cooling. Certain gases are thus kept from polymerizing or from operating in an explosion-prone temperature range
- Compared to their dry counterparts, these units achieve considerably higher compression ratios. This capability is, in part, attributable to the fact that in many services, liquid-injected machines do not require seals between the rotor chamber and the bearings. This reduces the bearing span, and therefore the rotor deflection. For example, a single liquid-injected compressor stage can do the job of two or more stages of dry compression.

9.1.4 Operating Principles

High-performance screw compressors use a twin-shaft rotary piston to combine positive displacement with internal compression (Figs. 9.5 and 9.6). Gas entering at the suction flange is conveyed to the discharge port and entrapped in continuously diminishing spaces between the convolutions of the two helical rotors. The result is compression of the gas to the final pressure before it is expelled via the discharge nozzle.

The position of the edge of the outlet port determines the inherent or built-in volume ratio, v_i, which is the ratio of the volume of a given mass of gas at the discharge and suction ports. The corresponding built-in compression ratio, π_i (i.e., gas pressure at discharge over the pressure at the suction port) is calculated using the following equation:

$$\pi_i = v_i^k \tag{9.1}$$

where k is the ratio of specific heats of the gas at constant pressure and volume, respectively.

The compression process is shown in the theoretical pressure–volume diagram (Fig. 9.7). A rotary screw compressor is designed for an anticipated compression ratio, π_i. If the machine discharges into a receiver with a compression ratio in excess of π_i, the compressor end wall will be exposed to that pressure.

When operated at compression ratios higher than the designed value, a centrifugal compressor is likely to undergo *surging* or periodic reverse flow, causing significant decline in machine performance. The screw compressor, on the other hand, is subject only to the constraints of machine component strength and input power. Thus, it can easily produce the increased compression ratio or discharge pressure. Rotary screw compressors can also accommodate less than built-in compression ratios. In this case, however, some efficiency will be sacrificed. These efficiency losses are identified as shaded areas in Fig. 9.7.

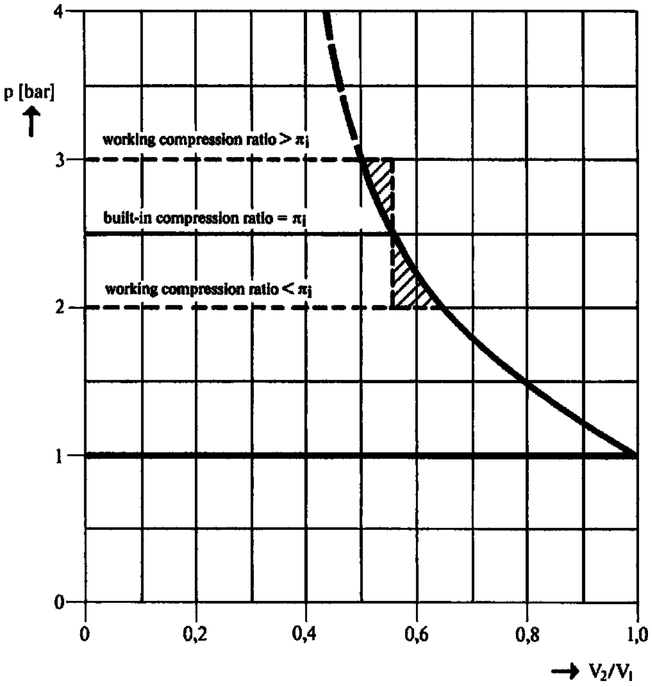

FIGURE 9.7 The *p–V* diagram of a modern helical screw (rotary screw) compressor. *(Aerzen USA Company, Coatesville, Pa.)*

9.1.5 Flow Calculation

The induced volume flow of the gas may be calculated from any compression ratio if the data applicable to the particular compressor being considered are known. One revolution of the main helical rotor conveys the unit volume q_0, L/rev. From this, one calculates the theoretical volume flow, Q_0, in std m^3/min for the compressor running at n rpm as follows:

$$Q_0 = \frac{nq_0}{1000} \tag{9.2}$$

The actual volume flow Q_a is lowered by the amount of gas Q_v flowing back through the very small clearances between machine components. Thus,

$$Q_a = Q_0 - Q_v \tag{9.3}$$

Q_v (also known as the volume flow lost via component slippages) is mainly dependent on the following factors:

- Total cross section of clearances
- Density of the medium handled
- Compression ratio
- Peripheral speed of rotor
- Built-in volume ratio

9.1.6 Power Calculation

The volumetric efficiency, η_v, is expressed as

$$\eta_v = \frac{Q_a}{Q_0} = 1 - \frac{Q_v}{Q_0} \tag{9.4}$$

The theoretical power input, W_0 (in kilowatts) required to compress the induced flow volume Q_a is given by

$$W_0 = \frac{10^{-3}}{60} \rho_a Q_0 H_a \tag{9.5}$$

where ρ_a, expressed in kg/std m^3, is the gas density at inlet conditions; and H_a represents the amount of energy required for the adiabatic compression of 1 kg of gas from pressure P_1 to P_2.

Alternatively, the theoretical power input could be obtained from

$$W_0 = \left(\frac{10^4 Q_a P_1}{6000} \right) \left(\frac{k}{k} - 1 \right) \left[\left(\frac{P_2}{P_1} \right)^{(k-1)/k} - 1 \right] \tag{9.6}$$

where Q_a is expressed in std m^3/min and P_1 is in bar.

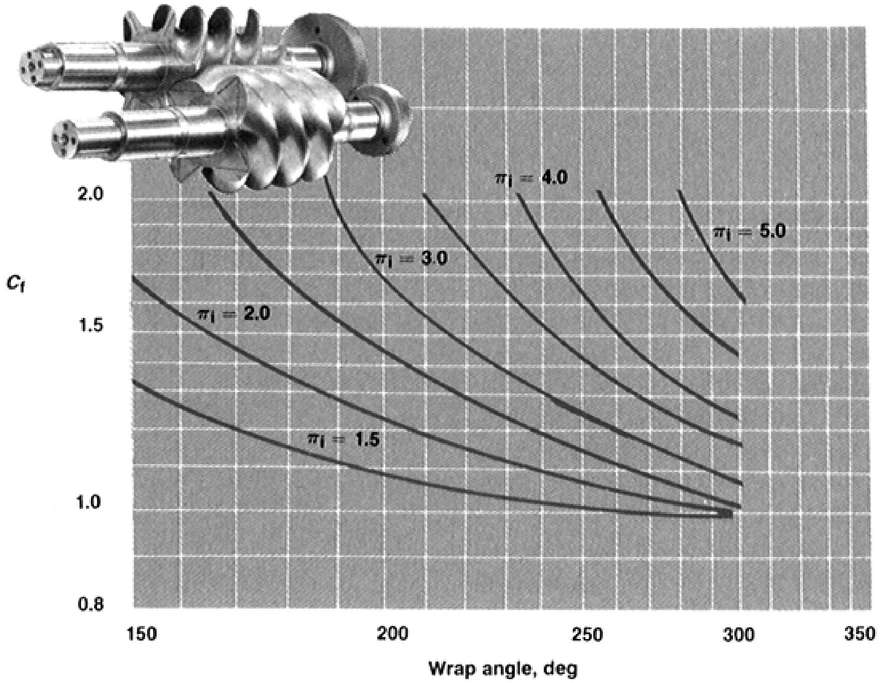

FIGURE 9.8 Empirical loss factor C_f as a function of the compression ratio π_i and the wrap angle of screw compressor rotors. *(Aerzen USA Company, Coatesville, Pa.)*

In practice, the theoretical power input is just a part of the actual power, W_a, transmitted through the compressor coupling. W_a should include the dynamic flow loss, W_d, and the mechanical losses, W_v. The mechanical losses—typically amounting to 8 to 12% of the actual power—refer to viscous or frictional losses due to the bearings, the timing, and step-up gears.

The dynamic flow losses typically amount to 10 to 15% of the actual power. A crucial factor in determining these losses is designated N_{id}, which is a function of the built-in compression ratio and the Mach number (ratio of gas velocity over the velocity of sound) at compressor inlet conditions. One can use the following formula to estimate dynamic flow power loss:

$$W_d = C_f \frac{L}{D} \frac{k}{1.4} \frac{P_1}{1.013} \left(\frac{Q_0}{60} N_{id} \right) \tag{9.7}$$

where C_f is an empirical factor (obtained from Fig. 9.8), L is the rotor length, D is the rotor diameter, and N_{id} is another empirical factor (obtained from Fig. 9.9). The reference conditions assumed in Eq. (9.7) and the associated charts are $Q_0 = 60\,\text{std m}^3/\text{min}$, $L/D = 1.0$, wrap angle described by a point on the thread of a screw as the point travels from the bottom to the top of the rotor (inset in Fig. 9.9) = 300°, $P_1 = 1.013$ bar, and $k = 1.4$ (corresponding to air).

Thus, the actual power requirement for the compressor is given by

$$W_a = W_0 + W_d + W_v \tag{9.8}$$

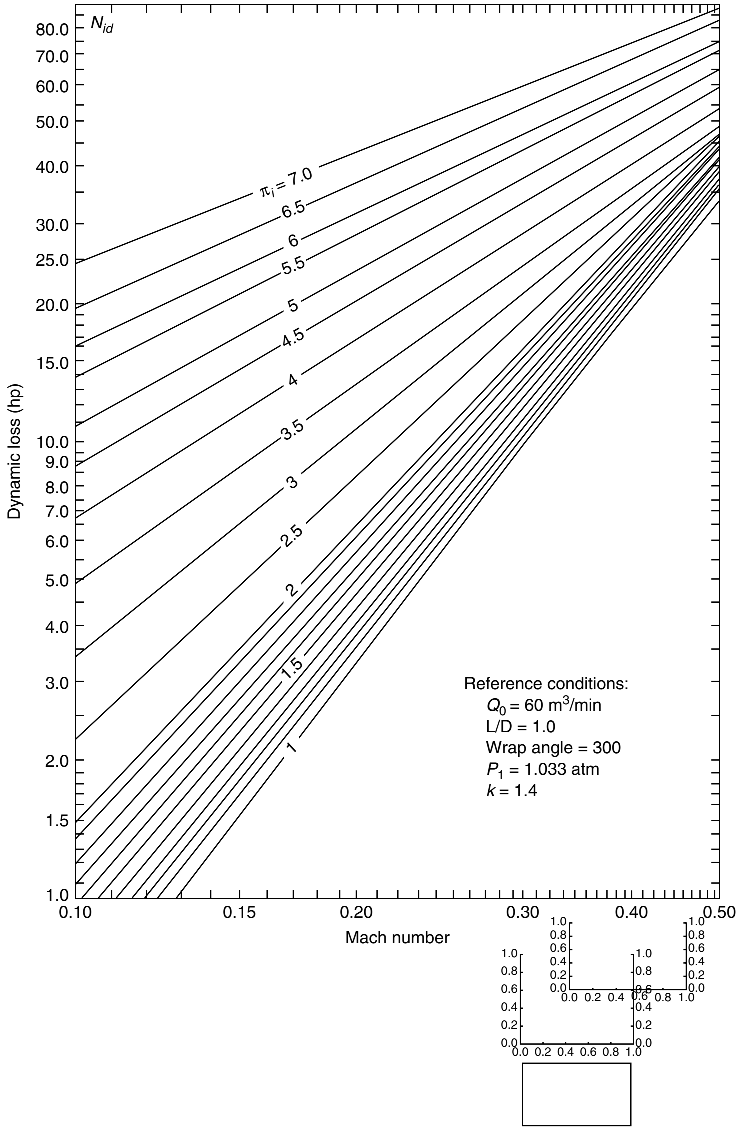

FIGURE 9.9 Empirical loss factor N_{id} vs. Mach number at different compression ratios π_i. The effect of compressor inlet conditions on the dynamic-flow power losses is shown as a function of the Mach number of the gas. *(Aerzen USA Company, Coatesville, Pa.)*

In North America, screw compressors for important process applications are typically built in compliance with the American Petroleum Institute (API) Standard 619. No negative tolerance is permitted on capacity, and the power requirement may not exceed the stated horsepower by more than 4%.

Screw compressors made in Europe can easily comply with this requirement. However, their customary Verein Deutscher Ingenieure (VDI; Society of German Engineers) Specification 2045 would allow a different margin of deviation to accommodate tolerances resulting from the usual operational limits of the manufacturing process.

9.1.7 Temperature Rise

For a dry compressor, the temperature (in °C) of the compressed gas at final compression is calculated as follows:

$$\Delta T_0 = \frac{T_1}{\eta_v}\left[\left(\frac{P_2}{P_1}\right)^{(k-1)/k} - 1\right] \tag{9.9}$$

$$T_2 = T_1 + \Delta T_0 \tag{9.10}$$

When operating under oil-free, dry-running conditions, a screw compressor may come up to a maximum final compression temperature of 250°C. When air is the compressed medium, this temperature (with adiabatic exponent $k = 1.4$) corresponds to a compression ratio $P_2/P_1 \approx 4.5$. On the other hand, within the same temperature limits, gases with $k = 1.2$ will permit a compression ratio as high as 7.0.

In an oil-injected screw compressor (Figs. 9.10 and 9.11), most of the heat of compression is carried away by the oil. The amount of oil injected is adjusted to ensure that final discharge temperatures do not exceed 90°C (194°F). If air is taken in under atmospheric pressure, compression ratios as high as 21 are obtainable.

9.1.8 Capacity Control

Because screw compressors are positive displacement machines, the most advantageous method of achieving capacity or volume flow control is that obtained by variable speed. This may be done by variable-speed electric motors, a torque converter, or a steam turbine

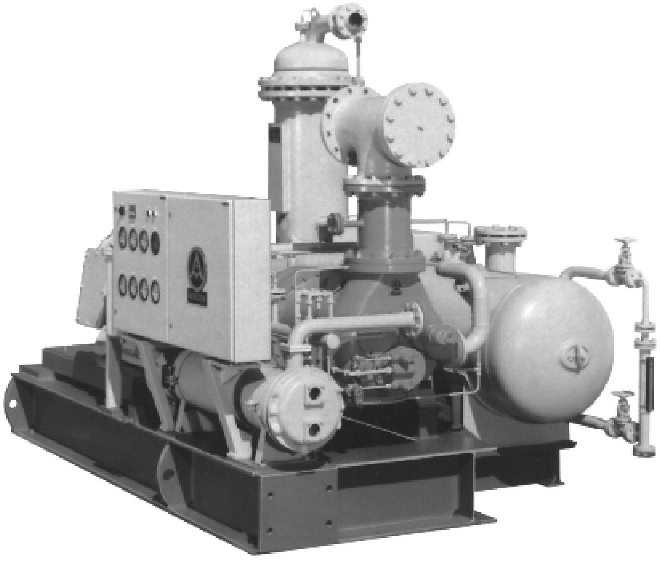

FIGURE 9.10 Oil-injected rotary screw compressor. *(Aerzen USA Company, Coatesville, Pa.)*

drive. Speed may be reduced to about 50% of the maximum permissible value. Induced volume flow and power transmitted through the coupling are thus reduced in about the same proportion.

Another method of capacity control is by using a bypass, in which the surplus gas is allowed to flow back to the intake side by way of a device that is controlled by the allowable final pressure. An intermediate cooler reduces the temperature of the surplus gas down to the level of the inlet temperature.

Use of a full-load and idling-speed governor is yet another means of capacity control. In this mode, as soon as a predetermined final pressure is attained, a suitable transducer operates a diaphragm valve (Fig. 9.12) that opens up a bypass between the discharge and suction sides of the compressor. When this occurs, the compressor idles until pressure in the system drops to a predetermined minimum value. This will cause the transducer to initiate closure of the diaphragm valve, and the compressor will again be fully loaded.

Control by suction throttle and discharge unloading is particularly suitable for air compression in the manufacture of industrial gases. As in the case of the full-load and idling-speed control method, a predetermined maximum pressure in the system (e.g., in a compressed-air receiver) causes pressure on the discharge side to be relieved down to atmospheric pressure. At the same time, the suction side of the system is throttled down to about 0.15 bar (2.2 psia). When pressure in the entire system drops to a predetermined minimum value, full load is restored.

Because the temperature at the final compression stage is governed by the injected oil, it is possible to operate an oil-flooded screw compressor over a wider range of compression

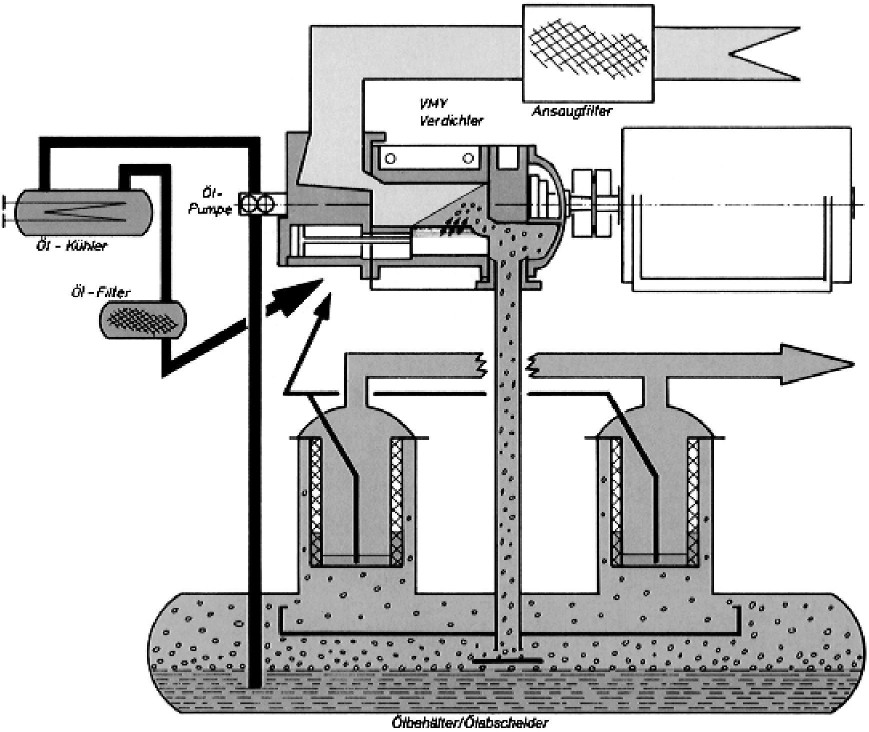

FIGURE 9.11 Operating principle of oil- or liquid-injected rotary screw compressors. *(Aerzen USA Company, Coatesville, Pa.)*

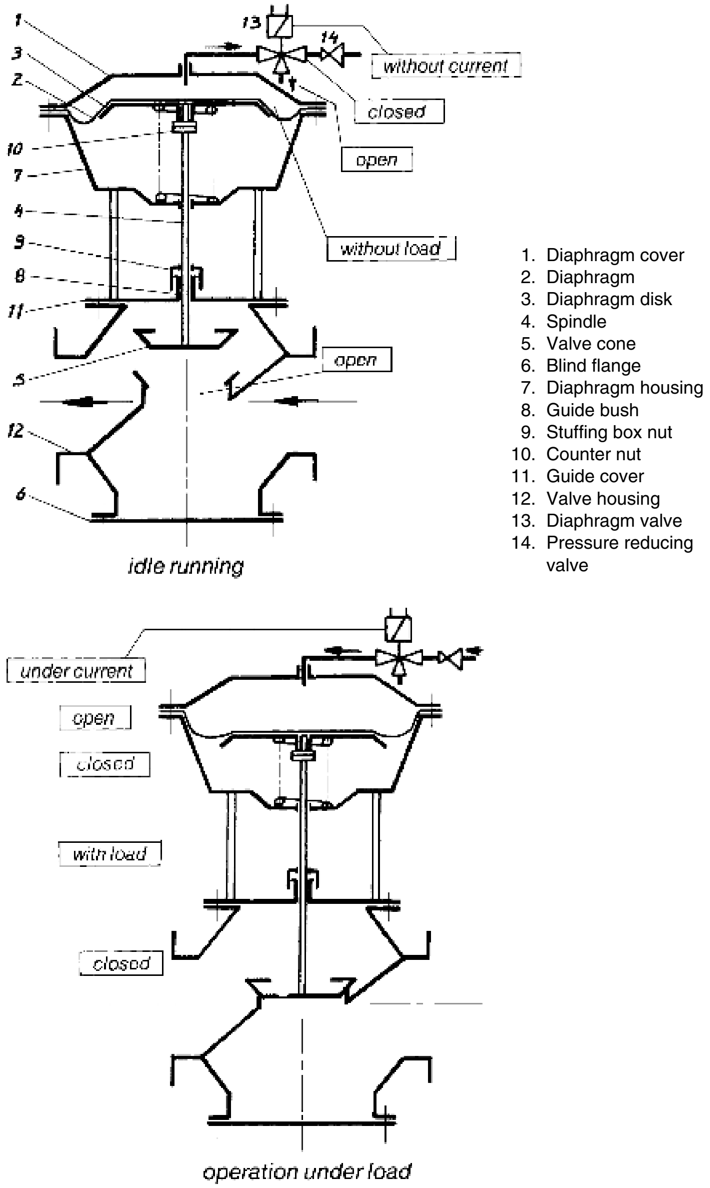

1. Diaphragm cover
2. Diaphragm
3. Diaphragm disk
4. Spindle
5. Valve cone
6. Blind flange
7. Diaphragm housing
8. Guide bush
9. Stuffing box nut
10. Counter nut
11. Guide cover
12. Valve housing
13. Diaphragm valve
14. Pressure reducing valve

FIGURE 9.12 Diaphragm valve associated with constant-speed unloading devices in rotary screw compressors. *(Aerzen USA Company, Coatesville, Pa.)*

ratios than would be feasible with dry machines. In addition, suction throttling in a screw compressor brings about a drop in the inlet pressure, thereby increasing the compression ratio.

Consequently, oil-injected machines can achieve smooth adjustment of volume flow with relative ease. Some machines, however, may not be designed for this increased compression ratio. It is thus necessary to ensure that achievable pressures do not exceed the mechanical limitations of a given compressor.

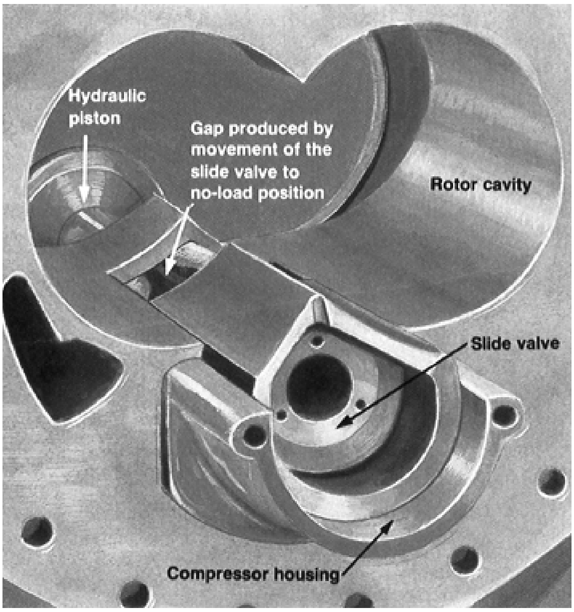

FIGURE 9.13 Internal volume regulating device for oil-injected rotary screw compressors. The position of a slide valve can be shifted in a direction parallel to the axes of the rotors. This provides control of the volume flow of the compressed gas. *(Aerzen USA Company, Coatesville, Pa.)*

Larger compressors can readily be equipped with an internal volume-regulating device (Fig. 9.13). It consists of a slide that is shaped to match the contours of the housing. By moving the slide in a direction parallel to the rotors, the effective length of the rotors can be shortened. The range of this smooth, infinitely variable control extends from 100% down to 10% of full compressor capacity. Also, slide controls offer stepless flow adjustment combined with power savings. These controls are applied primarily on screw compressors where the injected liquid has lubricating properties.

9.1.9 Mechanical Construction

Rotary screw compressors designed for high speeds and pressures incorporate sleeve bearings and self-adjusting multisegment thrust bearings (Fig. 9.14). These machines can also be equipped with the type of sealing system best suited for a particular process gas service. For example, carbon ring seals are used in conjunction with buffer gas injection and leakoff ports that are connected back to compressor suction (Fig. 9.15).

Floating ring seals containing barrier water (Fig. 9.15*b*) allow a certain amount of water to reach the compression space. This water functions as a sealing, cooling, flushing, or gas scrubbing medium. Typically, most of the barrier water is returned to its supply system for reuse.

Stationary double-mechanical seals, lubricated with pressurized water or a suitable oil (Fig. 9.15*c*) are used in many applications where emissions must be minimized. Alternatively, a stationary single seal combined with a floating sleeve element (Fig. 9.15*d*) works very well in machines that feature high-differential pressures. The more traditional

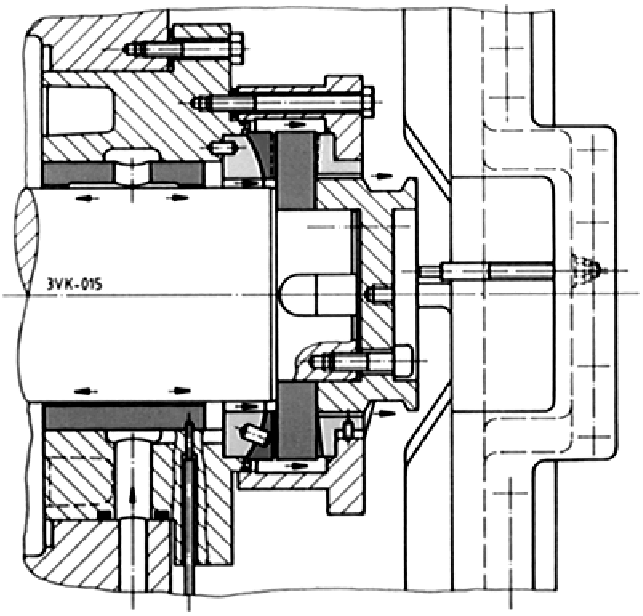

FIGURE 9.14 Radial and thrust bearings furnished with large rotary screw compressors. *(Aerzen USA Company, Coatesville, Pa.)*

labyrinth or mechanical seals can be used on the transmission side of the casings for geared rotary screw units (Fig. 9.15*e* and *f*).

9.1.10 Industry Experience

The capabilities of modern two-stage screw compressors that use water injection are being exploited in several European coke gas–producing plants. Conventional centrifugal compressors are highly vulnerable to performance degradation due to rapid polymerization of this relatively dirty, hydrogen-rich gas. In fact, centrifugal units require frequent cleaning of the internals, causing costly downtime every 6 to 8 weeks.

For example, in one coal gasification plant in Europe centrifugal compressors have been replaced with the three two-stage water-injected screw units shown in Fig. 9.16. The track record (in terms of availability and reliability) of these multistage screw compressors, driven by a 5.5-MW (7400-hp) electric motor, has proven to be remarkably good. Each of the three machines compresses about 33,000 std m^3/h (19,420 scfm) of coke-oven gas varying in pressure from 1 to 12 bar (14.5 to 174 psia). They also operate at considerably lower cost than the centrifugal compressors they replaced. Both power and overall maintenance costs have been reduced.

The decision to use screw compressors with water seals must be based on sound technical and thermodynamic considerations. In dry compression, for example, the discharge temperature may be well in excess of 100°C (212°F). As a result, the higher hydrocarbons may evaporate, leaving asphaltlike residues in the gas to form a coating on the rotors and the housings. These deposits can adversely affect throughput and efficiency. In particular, the sticky residue may fasten the two rotors together in a dry screw compressor whenever the machine is brought down and cooled for any reason.

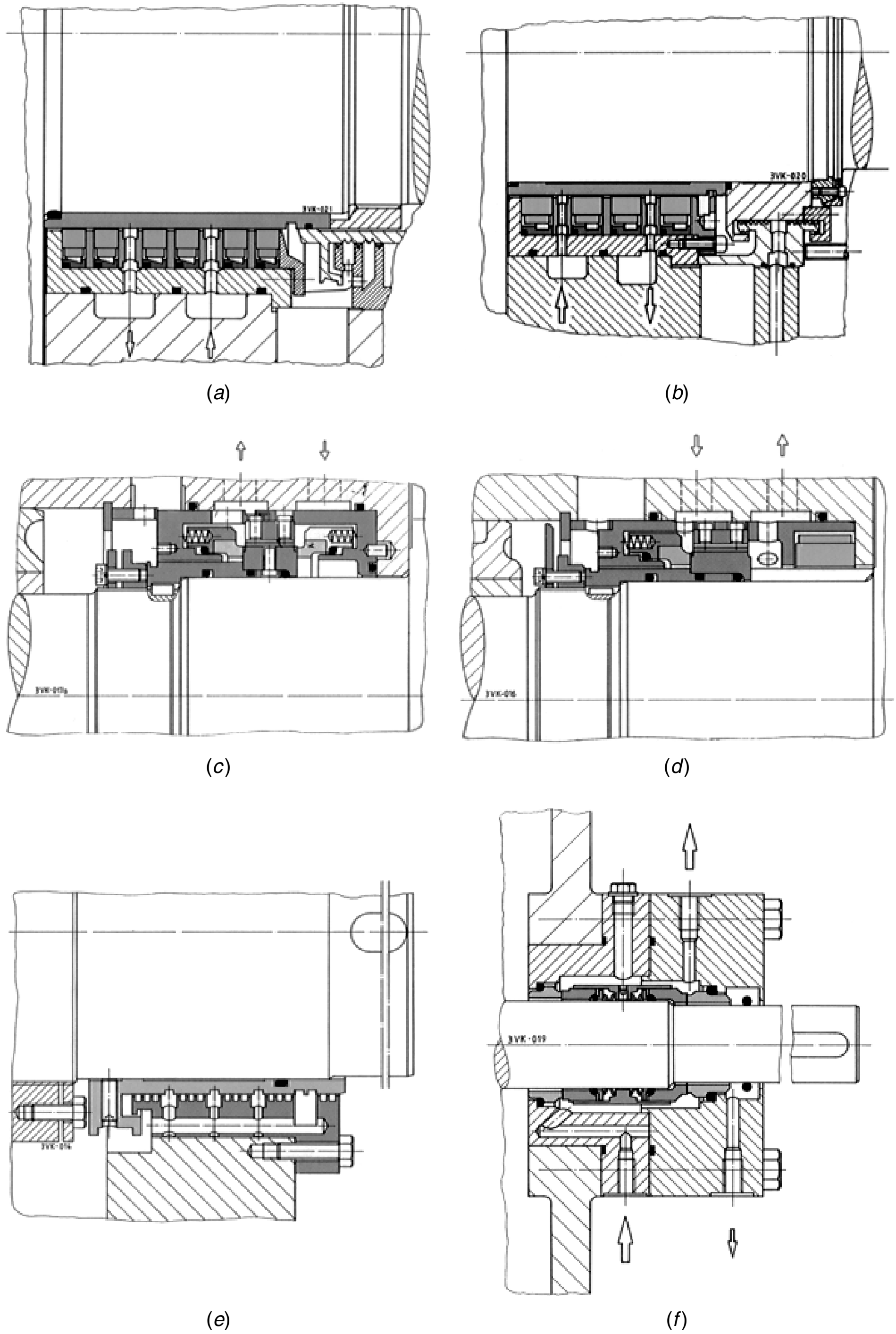

(*a*) (*b*)

(*c*) (*d*)

(*e*) (*f*)

FIGURE 9.15 Sealing arrangements for rotary screw compressors. At the conveying chamber: (*a*) carbon labyrinth seal, (*b*) water-sealed floating rings, (*c*) double-acting slide ring seal, (*d*) combined floating ring and slide ring seal. At the drive shaft: (*e*) labyrinth seal, (*f*) double-acting slide ring seal. *(Aerzen USA Company, Coatesville, Pa.)*

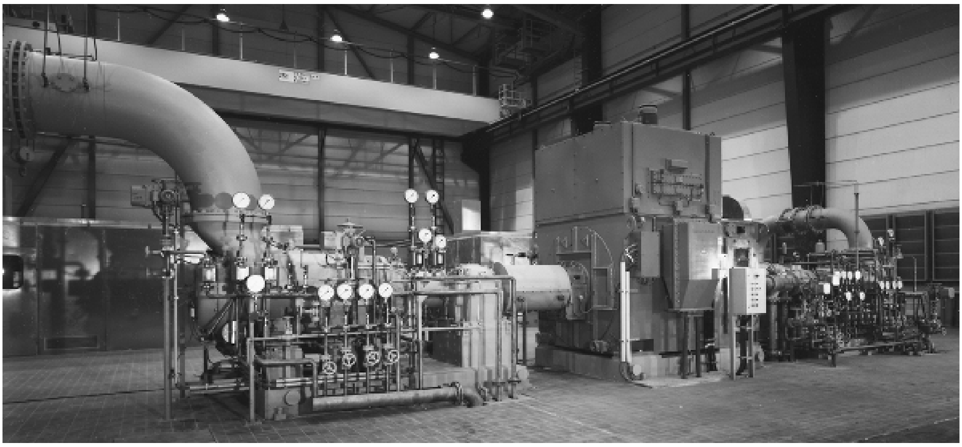

FIGURE 9.16 Large (approximately 7000 hp) rotary screw compressor installation at a German coal gasification plant. *(Aerzener Maschinenfabrik, Aerzen, Germany)*

Water injection limits the final gas temperature to 100°C. In addition, feeding the right amount of water into the compression space of the rotary screw compressor prevents polymerization by removing the heat of compression with the evaporating water.

Much of the water is supplied through the four shaft seals of each stage. The remainder is sprayed into the inlet nozzle of each stage, with the injection rate controlled by a temperature transducer at the compressor discharge. Refer to Fig. 9.17 for a flow schematic of a two-stage unit with water barrier seal.

The gas temperature is thus regulated to just below the dew point. This ensures that the deposits are flushed away by the excess water present. The water is finally drained off at the discharge silencer and in the water separators of the intercoolers and aftercoolers of each stage.

Because the gas contains corrosive components, such as hydrogen sulfide, ammonia, hydrogen cyanide, and carbon dioxide, the materials of construction of choice for the compressor have been chromium–nickel alloy steels. Although ensuring erosion resistance, these steels are also resistant to chemical attack by the gas. However, precautions must be taken to avoid corrosion-related wear that can occur over a period of time as a result of the injection of water.

An inspection carried out after 1 year of continuous service in the coking plant has revealed that the rotors and housings are free of dirt deposits. In addition, they have shown no signs of physical or chemical damage due to erosion or corrosion.

Employing what is known as *intermediate pressure regulation,* the screw compressor matches the volume flow to the variable, momentary requirement of the process gas. Gas not required by the final receiver or downstream process is returned after the first stage via a bypass to the intake side. This results in significant power savings while providing a continuous regulation of volume flow ranging from about 20,000 to 33,000 std m^3/h (11,770 to 19,420 scfm). For example, at 20,000 std m^3/h, the power consumption is about 3200 kW (4290 hp), compared with 3950 kW (5295 hp) at 30,000 std m^3/h.

The compressor inlet system has been fitted with separate superchargers that offer the additional capability of boosting the inlet pressure to about 1.6 bar (23 psia). This results in

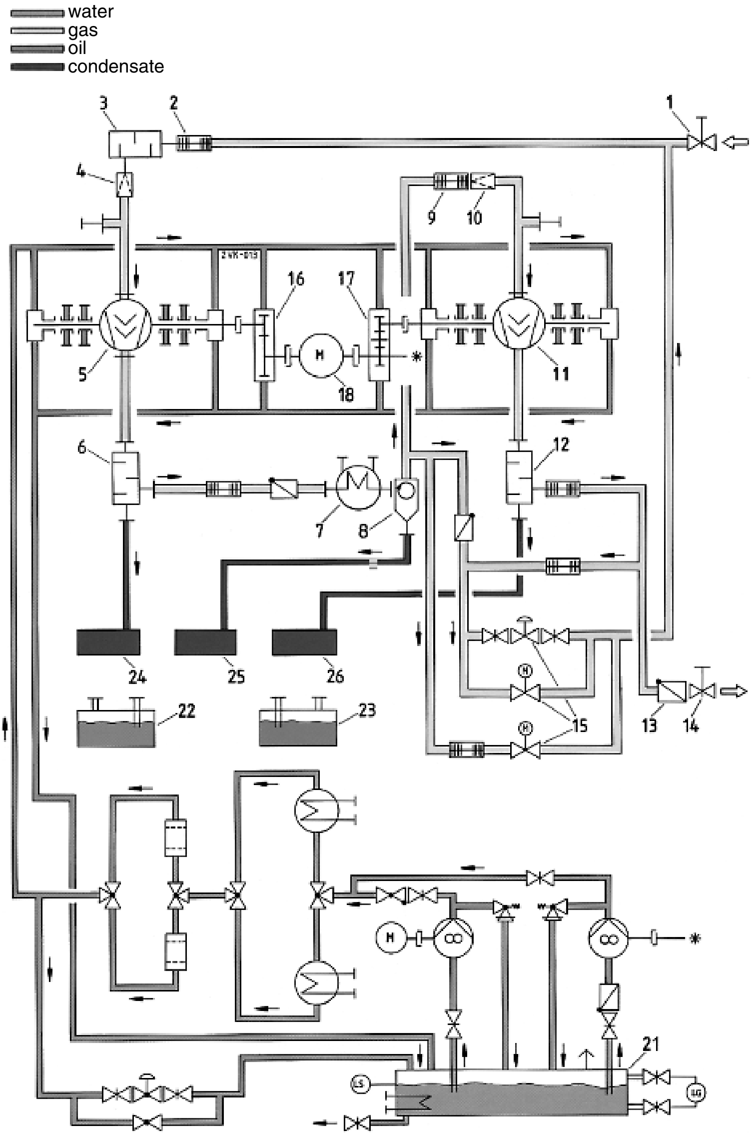

1. Gate valve
2. Lateral compensator
3. Intake silencer 1st stage
4. Starting strainer 1st stage
5. Screw compressor 1st stage
6. Discharge silencer 1st stage
7. Intercooler
8. Separator
9. Safely relief valve 1st stage
10. Starting strainer 2nd stage
11. Screw compressor 2nd stage
12. Discharge silencer 2nd stage
13. Non-return valve
14. Gate valve
15. Control devices
16. Gear box 1st stage
17. Gear box 2nd stage
18. Safety relief valve 2nd stage
21. Oil system
22. Barrier water system
23. Water injection system
24. Condensate tank 1
25. Condensate tank 2
26. Condensate tank 3
27. Drive motor

FIGURE 9.17 Flow diagram of a two-stage rotary screw compressor unit with a barrier water seal. *(Aerzener Maschinenfabrik, Aerzen, Germany)* an intake volume flow of about 46,000 std m^3/h (27,070 scfm). Thus, combining intermediate pressure regulation with supercharging provides a continuous range of regulation from 20,000 to 46,000 std m^3/h. With this wide range of operability, the coking plant can adapt at any time to changing gas requirements.

9.1.11 Maintenance History

The maintenance history of the three two-stage 5.5-MW rotary screw compressors indicates that they went through partial dismantling every five years. At that time, only the carbon seal rings needed replacement because they suffered some physical damage. All other parts, including bearings, have been reinstalled in the compressors without modification or repair.

In 2006, maintenance costs were estimated at $140,000 for a typical five-year period. This estimate, which includes labor and materials, is orders of magnitude below the expenditures incurred with centrifugal compressors in this type of service.

A second installation that operates two three-stage rotary screw compressors has had its first turnaround inspection after 35,000 hours of uninterrupted service. Several carbon seal rings show traces of wear, and all other parts are in excellent condition. However, because the carbon rings were still quite serviceable, this installation has increased its typical turnaround intervals to 45,000 to 50,000 operating hours.

A third installation (also in Europe) has been less than satisfactory, however. The screw compressors in this plant have experienced accelerated erosive wear of carbon seal rings. This is attributed to unacceptable water quality. The lesson to be learned is that water-injected rotary screw compressors require demineralized water. In this respect, they resemble the common steam turbine.

Of course, applications of screw compressors are in no way limited to coking plants. They can be used for delivery and compression of contaminated gases as well. Moreover, these units are ideally suited for compression of gases that tend to polymerize at relatively low temperatures.

9.1.12 Performance Summary

The performance of a screw compressor is influenced by factors such as gas properties, internal clearances, length/diameter ratio of the rotors, built-in compression ratio, and operating speed. Although compressor manufacturers have not yet found practical ways to present compressor performance for various machine sizes or inlet and outlet conditions in a single graphical layout or diagram, one can still make rule-of-thumb estimates using the graphs and charts shown later for conventional centrifugal compressors.

Typical adiabatic efficiency is almost always between 70 and 80%. The maximum allowable compression ratio for one stage of a screw compressor corresponds to the value that will not cause the final compression temperature to rise above the permitted value of 250°C (482°F). To a large extent, this will depend on the *k* value (the ratio of specific heats) of the gas to be compressed.

Compressor speeds can vary from about 2000 to 20,000 rpm, depending on unit size. The peripheral speed of the rotor determines the magnitude of the rotational speed. This peripheral speed ranges from 40 to 120 m/s (131 to 394 ft/s) up to a maximum of 150 m/s (492 ft/s) for gases of low molecular weight.

As would be the case with virtually any other specific type or category of fluid machinery, rotary screw compressors embody both advantages and disadvantages in relation to other equipment competing for market share. Listing the advantages first, the application engineer would wish to consider the following:

- Available as "wet screw" compressors with an oil loop serving (a) both bearing lubrication and compression space, or (b) bearings and compression space separately (dual circuit).
- Considerably reduced sensitivity to molecular-weight changes compared to centrifugal machines.
- Much greater tolerance for polymerizing service than other compressors, except perhaps liquid ring machines.
- Capability of accepting more liquid and fine solids entrainment than other compressors, except liquid ring compressors.
- Higher efficiency and less maintenance than liquid ring machines.
- Estimated availability in excess of 99.5%. This may approach or, in certain services, exceed that of centrifugal and axial compressors.
- Smaller size and lower cost than reciprocating compressors in the same capacity range.
- Lower cost than centrifugal compressors in the small and moderate-sized ranges (below approximately 3000 kW, or about 4000 hp).
- Higher pressure capability than other types of rotary positive displacement machines.

Among the disadvantages found are some that are perceived and others that are real. They thus merit more detailed examination.

- Sensitivity to discharge temperature that could affect close clearances and hence operability and availability: Proper temperature control instrumentation and generous sizing of cooling water or liquid injection facilities make this a "non-issue" for modern liquid-injected screw compressors.
- Performance affected by rotor and casing corrosion or erosion. Increased clearances promote internal recycle or gas slip effects—not a serious concern with water- and oil-injected rotary screw compressors.
- Noise level is high enough to require silencing—a factor that must be taken into account. Capable rotary screw compressor manufacturers are fully equipped to provide well-engineered means of reducing environmental noise to meet even the most stringent requirements (see Fig. 9.18).
- Rotary screw compressor systems require pulsation suppression. Although not as severe as piping pulsations encountered with equivalent reciprocating compressors, a properly engineered screw compressor system would incorporate appropriate pulsation bottles and, for high discharge temperatures, pipe expansion loops.
- Choice of rotor and casing materials more limited than for centrifugal compressors. This observation is related to the intricacies and close tolerance requirements of the machining process. Also, a knowledgeable manufacturer is cognizant of certain nonlinearities in the coefficients of expansion of different stainless steels. This might impose experience-based temperature limitations on certain metallurgies and service conditions.
- Maintenance cost and duration of downtime higher than for centrifugals—highly service dependent and not always so; merits closer investigation.

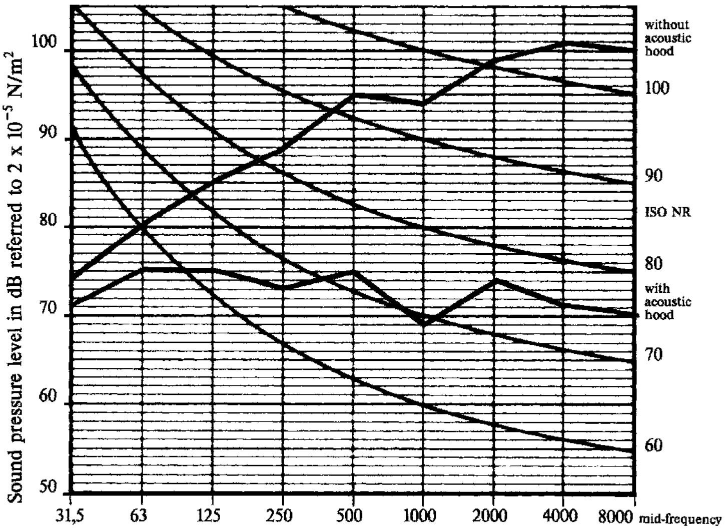

FIGURE 9.18 Typical sound levels obtained from rotary screw compressors with and without acoustic enclosures. *(Aerzen USA Company, Coatesville, Pa.)*

- Flow control flexibility inferior to that of centrifugals and reciprocating compressors—a serious misconception that neglects to take into account the full spectrum of available options given earlier.

9.2 OIL-FLOODED SINGLE-SCREW COMPRESSORS

Oil-flooded single-screw compressors are available for gas flows in the vicinity of 1000 cfm (1700 m^3/h) and discharge pressures approaching 800 psi (55 bar). As can be seen from Fig. 9.19, these machines incorporate features that make them a hybrid between other, sometimes competing compressor types. Cooling oil, which circulates through the compressor to absorb the heat of compression also provides sealing of the gas in the compression spaces and lubrication of the rolling element bearings. Synthetic or special lubricants are used for applications with corrosive gases or when high condensation rates are encountered.

The intermeshing of three principal rotating parts accomplishes the continuous compression process in oil-flooded single-screw machines. The gas flow can be visualized from Fig. 9.20. Suction gas flows into the inlet passage and fills a screw groove. The inlet gas is trapped in the groove when the gate rotor tooth meshes with the screw groove and seals the groove. As the screw continues to rotate, the trapped gas is compressed as the length and volume of the groove is reduced. Injected oil seals the running clearances to prevent leakage of gas.

When the screw rotates far enough, the groove passes the discharge port, delivering gas to the discharge manifold. The location of this port determines the internal volume reduction and thus the internal compression ratio.

Since there are two gate rotors, compression occurs simultaneously on both sides of the screw rotor. Thus, compressive forces are radially balanced. Thrust forces are minimal since suction pressure is ported to both ends of the screw. Because the gate rotor axes are perpendicular to the screw axis, virtually no torque is transmitted to the gate rotors, so wearing forces are kept low.

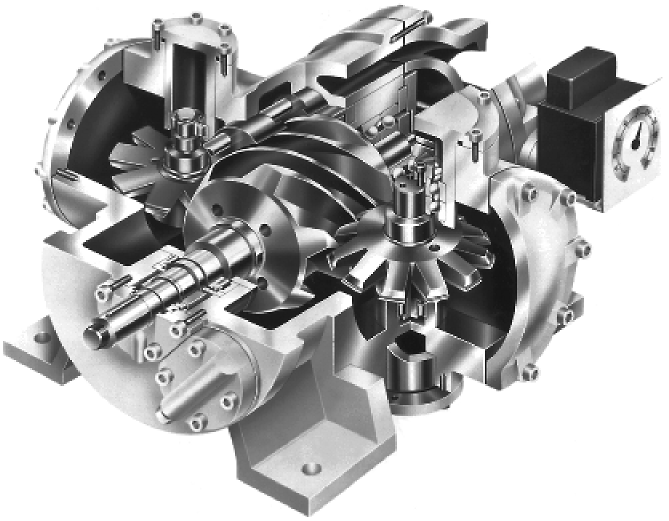

FIGURE 9.19 Oil-injected single-screw compressor. *(Dresser-Rand Company, Broken Arrow, Okla.)*

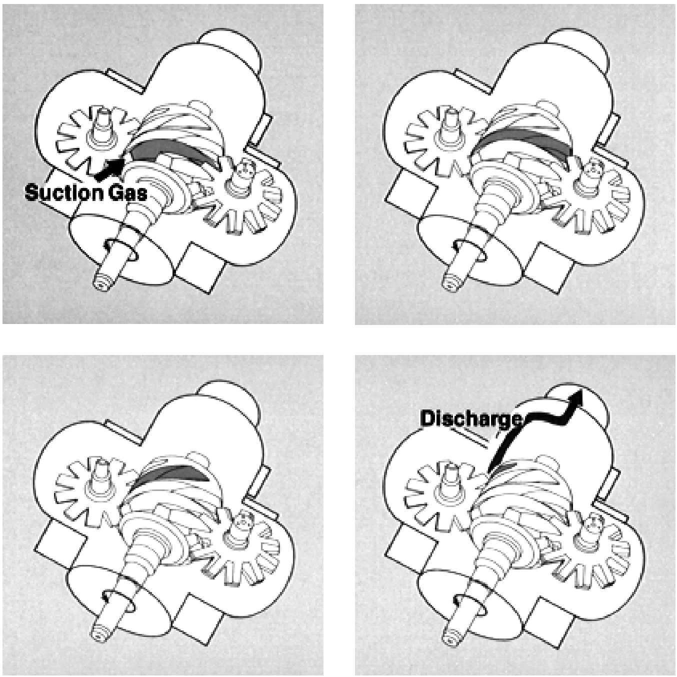

FIGURE 9.20 Gas flow in an oil-injected single-screw compressor. *(Dresser-Rand Company, Broken Arrow, Okla.)*

The schematic of Fig. 9.21 shows the basic relationship between the gas to be compressed and the cooling-lubricating oil. Inside the compressor, oil and gas are mixed and then delivered to a high-efficiency gas–oil separator. Clean gas is then delivered to the skid edge, usually aftercooled. The oil collected in the separator is cooled, filtered, and reinjected

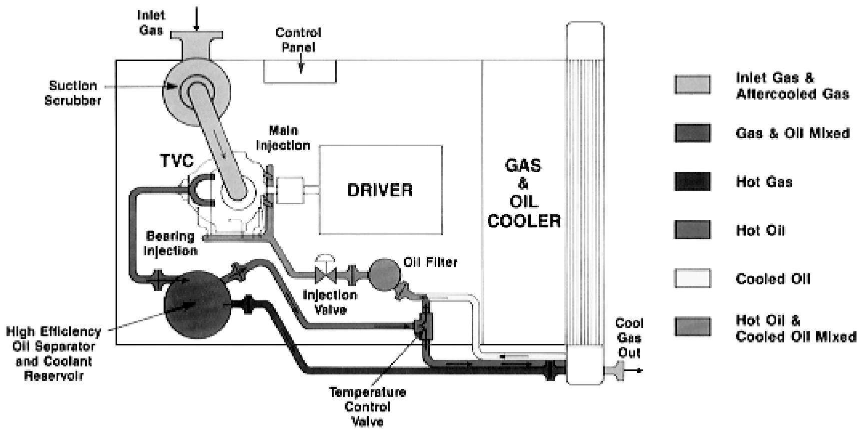

FIGURE 9.21 Process flow schematic showing an oil-injected single-screw compressor. *(Dresser-Rand Company, Broken Arrow, Okla.)*

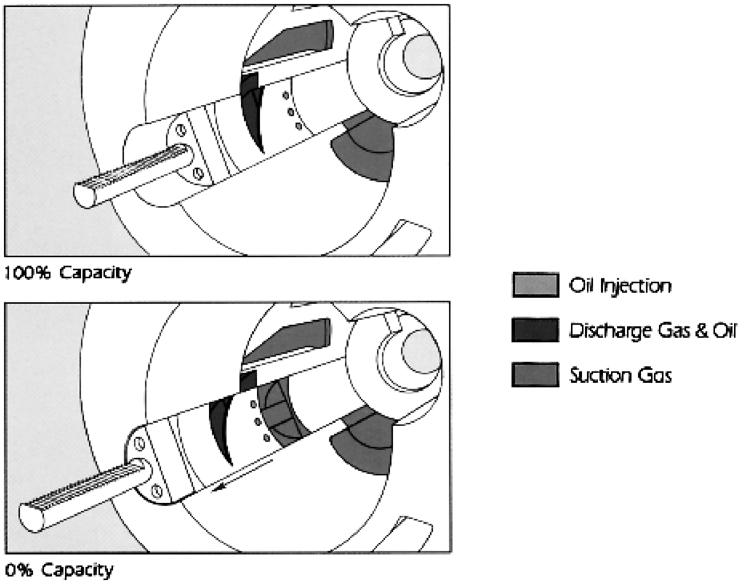

FIGURE 9.22 Capacity control slides in an oil-injected single-screw compressor. *(Dresser-Rand Company, Broken Arrow, Okla.)*

into the compressor. The compressor discharge temperature is held constant during the compression cycle, but the operating discharge temperature selected will vary according to the application.

Capacity control is accomplished through slide pistons contained in the compressor casing of Fig. 9.19. By means of rack-and-pinion gears, the two slides are moved axially and controlled via a stub shaft which protrudes from the side of the casing near the discharge flange.

Figure 9.22 shows one capacity slide at 100% capacity (top) and 0% capacity (bottom). The screw rotor has been removed for clarity. In the 100% position, the slide is positioned so that no leakage of gas can occur during compression; thus, all the gas that enters the

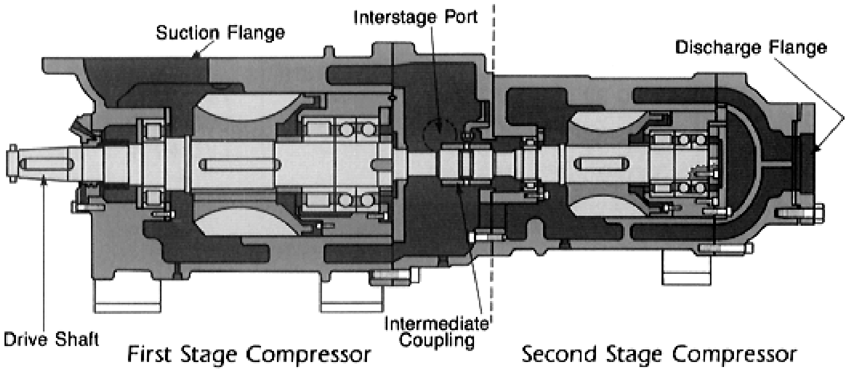

FIGURE 9.23 Two-stage version of an oil-flooded single-screw compressor. *(Dresser-Rand Company, Broken Arrow, Okla.)*

screw groove is delivered to the triangular discharge port. At less than 100% the slide valve is moved so that some of the gas that had entered the groove returns to suction prior to compression. In the same motion, the discharge port moves away from the return port. This delays the groove from passing the discharge port, preserving the internal volume reduction in the compressor.

Oil-flooded single-screw compressors are also available in single-shaft two-stage designs for high-compression ratio service. The second stage of compression is connected to the first through a gastight transition piece that delivers gas and oil between stages and a through shaft with a splined coupling that transmits torque to the second-stage screw (Fig. 9.23). Two-stage compressors are equipped with sidestream capability (e.g., refrigeration economizing) and 40 to 100% infinitely variable capacity control.

It can be assumed that the cost of process interruptions and frequent maintenance incurred with single oil circuits in dirty gas services is often prohibitive. In view of this, it would be difficult for a reliability-focused purchaser–owner to allow anything other than separate oil circuits. The buyer must be prepared to budget funds for the commensurate higher cost. The term *dirty gas* includes even trace quantities of H_2S. Also, if solids are allowed to enter with the gas, they will somehow have to be removed from the oil or other medium that is used with liquid-filled machines. Clearly, this leads to considerations involving our next topic, filter-separator technology.

9.3 SELECTING MODERN REVERSE-FLOW FILTER-SEPARATOR TECHNOLOGY*

Reverse-flow filter-separator technology is a profit generator for best-of-class refineries and petrochemical plants. First applied in the mid-1970s, these flow-optimized self-cleaning coalescers (SCCs) represent mature low-life-cycle-cost best-technology solutions for reliability-focused users. A reliability-focused user is far more interested in low life-cycle costs than in lowest-possible purchase price. However, since aggressive marketers are known to have clouded the issue with advertising claims, a thorough examination and explanation of facts and underlying principles are in order.

---

*Contributed by King Tool Company, Longview, Tex.

9.3.1 Conventional Filter-Separators vs. SCCs

To understand how SCCs work, we must first recall how most *conventional* filter-separators (CFSs) function. In a CFS (Fig. 9.24), the gas enters the first-stage filter elements, where its velocity is reduced as it passes through a large filter element area. Initially, the various and sundry contaminants (e.g., iron sulfides) are caught by the filter, but the gas forces gradually sluff it to a particle size that will pass through the filter elements.

The gas, solid particles, and liquids coalesced on the inside of the filter element undergo reacceleration and are being reentrained in the collector tube before being led to the next separator section. With wire mesh or vanes in this section typically allowing passage of fine mist droplets and particles—let's call them *globules* of liquid—in the size range below 3 to 8 μm, a good percentage of liquid and small solids (particulates) remain entrained in the gas stream leaving the CFS.

In contrast, self-cleaning coalescers (SCCs) (Fig. 9.25) vastly reduce this entrainment and send much cleaner gas to the downstream equipment. However, SCCs do not accomplish this task merely by making the inlet into an outlet, changing the outlet to the inlet, and calling the "new" device a reverse-flow unit. Instead, consideration had to be given to internal configuration, flow pattern, and—most important—the characteristics of both the liquids

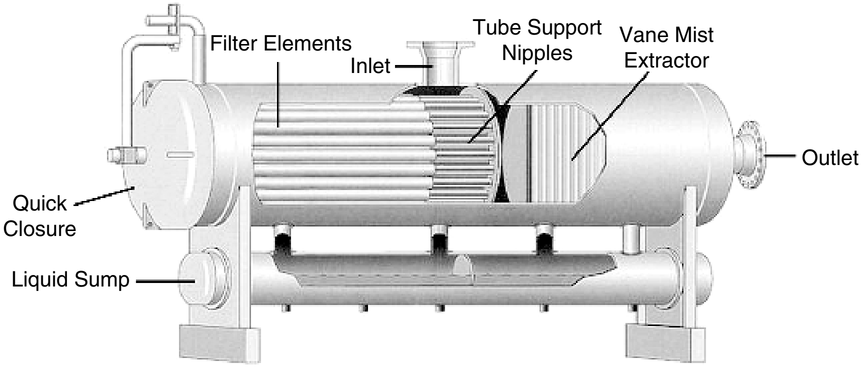

FIGURE 9.24 Conventional filter separator. (*King Tool Company, Longview, Tex.*)

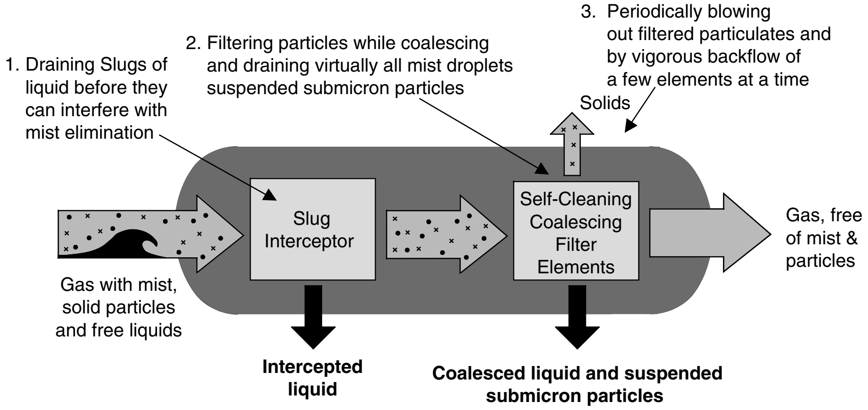

FIGURE 9.25 Self-cleaning coalescer. *(King Tool Company, Longview, Tex.)*

and solids to be removed. The designers had to adjust their thinking from only pressure-drop concerns to considerations dealing with liquid specific gravities, liquid surface tensions, viscosities, and reentrainment velocities.

In properly designed SCCs, gas first passes through the plenum, then through collection tubes to the filter elements. The front end of an SCC represents a slug-free liquid knockout. The deentrainment section is sized to reduce the gas velocity so as to allow any particulates that might have made it through the filter either to drop out or to attach themselves to the coalesced liquid droplets that fall out at this stage. Over three decades of solid experience have proven the effectiveness of this design. Essentially all entrained particulates and mist globules are removed, as are free liquids and large agglomerated materials.

9.3.2 Removal Efficiencies

Some CFS configurations and models claim removal efficiencies with their "coalescers" that are much better than those actually achieved. These claims are often made for vessels that are much smaller than the well-proven SCCs and are virtually impossible to achieve with single-stage CFS models. Also, these CFS designs are vertically oriented and their manufacturers or vendors sometimes state—incorrectly—that effective coalescing cannot be achieved in a horizontal vessel.

Upon closer examination, one may find certain CFS configurations to have high pressure drops with "moist" gases or high velocities, shorter filter elements, and virtually never any slug-handling capacity. Moreover, unless a vendor or manufacturer uses the high-efficiency particular air (HEPA) filters mandated for use in nuclear facilities and hospital operating rooms, filtration effectiveness down to 0.3 μm—considerably less than one hundredth of the width of a human hair—is simply not achievable.

9.3.3 Filter Quality

Keep in mind that a conventional forward-flow filter separator is considered to be a coalescer. It incorporates filter elements that operate on the coalescing principle. The filter elements coalesce liquid droplets into globules of 10 μm and larger to be removed by the downstream impingement vane mist extractor (vanes are guaranteed to remove 8- to 10-μm particles). It is not reasonable to use simple piping insulation as a filter medium and guarantee the removal of droplets in the 0.3-μm size range. Multistage configurations are needed and the ultimate filter has to be "HEPA-like" (i.e., it has to far exceed the quality of piping insulation).

A good design typically embodies long fiberglass filter elements using certain microfiber enhancements that are known to modern textile manufacturers. Low-velocity technology is extremely helpful, and surface area is not as important as the depth of the media through which the gas has to pass. The thicker the filter element, the longer the gas takes to pass through it, resulting in more and better coalescing of the liquids.

Some SCCs are offered with thin high-pressure-drop pleated-paper elements, representing very low contact times and high exit (reentrainment) velocities. As dirt builds up, exit velocities rise even higher, resulting in more and more reentrainment of liquid mists and any associated shearable solids exiting the cartridges. This process goes on as the reentrained particles get smaller and smaller, thus meeting an artificial guarantee as velocities become higher and higher. Others offer fibers of high-density and high-depth media which result in a high pressure drop and high exit velocity, and which reentrain immediately after passing through the cartridges. Both of these approaches, as well as the downsizing of vessels and internals, contribute to marketing strategies geared to high consumption of elements and thus high sales volume and profitability for the vendor.

A competent SCC manufacturer's approach should be just the opposite—to give the user–purchaser maximized reliability, maximized cartridge life, and the lowest possible maintenance expenses. Years ago, the concept of "self-cleaning" vessels was transferred successfully from oil bath separator scrubbers. They are still offered for specific applications and incorporate rotating cleanable bundles. This technology evolved to filter vessels with a rotating cleaning mechanism and to the present state of the art: the back-flushing of individual elements while remaining onstream. Further, competent manufacturers still offer maximized performance even from conventional vessels by utilizing tried-and-true designs with maximized internals. They will not advocate the use of downsized versions that violate certain velocity and pressure-drop criteria, thereby incurring high maintenance and nonsustainable or nonoptimized performance.

This takes us back to HEPA filters. Designed and developed for air filtration, HEPA filters recycle the air many times within a closed system and add fresh makeup air periodically to achieve the desired air quality. In the hydrocarbon processing industry there is usually only a single-pass opportunity to achieve clean gas. It is rarely feasible to recycle process gases several times to obtain the desired gas purity. Since absolute beta-rated filter elements are simply not able to achieve these results, many inferior designs call for one or more "conditioning" filters, or vessels to be placed upstream of their coalescer.

Also, be on the lookout for offers that allude to the advisability, or just the merits, of installing downstream vessels to clean up certain liquid streams to which the gas has been exposed. A relevant question to ask is why the liquid has to be cleaned up if the upstream vessel(s) have done their job of, say, protecting the treating tower. Without fail, the answer will point to liquids, or mists, or corrosion products in the form of small solids particles that were not adequately removed upstream of the tower. Hence, foaming and treating agent contamination were not eliminated. This results in tower upsets, additional filtration for liquids, and even the possible need for carbon beds or filters to remove trace liquid aerosol contaminants. SCCs have been implemented successfully to protect such process streams and to eliminate or prevent contamination-related upsets. Time and again, bottom-line results show that self-cleaning coalescers protect equipment and safeguard reliability.

9.3.4 Selecting the Most Suitable Gas Filtration Equipment

Superior self-cleaning coalescers can remove iron sulfides, viscous fluids, and slugs because of their inherent low pressure drops (4 to 6 in., or 100 to 150 mm H_2O). Moreover, low velocities and other important considerations conducive to good separation and low life-cycle costs must be taken into account here. With input from the user or destination plant, a competent vendor can assist in drawing up a good inquiry specification. Within the specification there are many options to consider. The choice quite obviously depends on process conditions and related parameters, some of which are as follows:

- *Dry filter:* gas with associated solids
- *Dry filter, self-cleaning:* gas associated with solids
- *Line separator:* gas containing entrained liquid mist
- *Vertical or horizontal separator:* gas with entrained liquid globules (mist, aerosol); gas with entrained liquid particles (mist) and free liquid (slug) removal

- *Vertical or horizontal filter-separator:* gas with entrained liquid globules (mist, aerosol) and stable solids
- *Reverse-flow mist coalescer:* gas with entrained liquid globules (mist, aerosol); removal to submicrometer particle size and extremely high efficiency
- *Reverse-flow mist coalescer with slug chamber:* gas with entrained liquid globules (mist, aerosol), slugs and (stable or unstable) solids; removal to submicrometer level or better, at high efficiency (can be furnished in self-cleaning configuration while in full service)
- *Oil bath separator-scrubber:* gas with liquid globules (mist) and solids (stable or unstable); removal to 3 μm at 97% efficiency by weight
- *Tricon 3 stage separator:* gas with entrained liquid globules (mist), slugs, and solids (stable or unstable); removal to 3 μm at 97% efficiency

9.3.5 Evaluating the Proposed Configurations

Once the various bidders submit their offers, they must be evaluated using life-cycle cost and suitability criteria. An objective evaluation must keep in mind the following:

1. *Velocity.* Once the gas stream enters the vessel, there should be no internal configuration that would accelerate the gas back to the pipeline velocity. Causing the motion of gas to increase in velocity will only cause the liquid to shear into smaller and smaller globules.

2. *Pressure drop.* In no instance should a piece of separation equipment be designed with more than a 2-psi pressure drop from flange to flange when the vessel operating pressure exceeds 500 psig. At less than 500 psig, the flange-to-flange pressure drop should be limited to 1 psi or lower. Pressure drop consumes energy, and energy costs money. In no design of separation equipment should the pressure drop across an element arrangement be allowed to exceed 0.5 psi. As filter elements become wetted and 50% plugged, the pressure drop increases fourfold. If, say, the initial pressure drop is 0.5 psi and the elements become half-plugged, the pressure will increase to 2 psi. Once the elements become three-quarters plugged, the pressure will increase to 8 psi. This is 16 times the initial pressure drop, and a change of elements is now unavoidable. Keep the initial filter element pressure as far below 0.5 psi as possible to avoid frequent element change-out. Remember that the filter elements have to be disposed of, and this disposal can become expensive.

3. *Filter element cost.* Always ascertain the cost of replacement elements. Some vendors will practically give away vessels in order to generate spare parts sales. Find the inside diameter, the outside diameter, and the length of the proposed elements and how many of these make up the vessel internals. Using this information, calculate the surface area on the inside of the elements and the velocity of the gas entering the elements. Also from this information, determine the exit velocity leaving the elements. Note that this velocity should not exceed the reentrainment velocity of the liquid. Some of the reverse-flow coalescer offers you might receive will turn out to be “eggbeaters” that take whatever liquid enters the vessel and shears it into orders-of-magnitude amounts of smaller globules which are then reentrained in the gas stream. Liquid globules can be sheared so small that they cannot fall out again until they recoalesce downstream. But all the same, the liquid is there to do its damage to downstream equipment.

4. *Vessel Life.* Under ordinary circumstances, separation equipment should have a useful life of 20 to 25 years. Needless to say, corrosion problems, internal explosions, vibration or

pulsation, overloads, hydrate formation, lack of routine maintenance, incorrect or faulty maintenance practices, misapplication or use of equipment under unsuitable operating conditions, replacing elements with unsuitable or poor-quality substitutes, and various other forms of mistreatment can affect vessel life adversely.

5. *Reliability of the vendor.* If a piece of separation equipment is bought and put into service under conditions that deviate from the design intent, it may not live up to expectations. Such underperformance will usually manifest itself rather quickly. Yet, these unpleasant surprises can be avoided by selecting a reliable vendor as the source of supply. The person or team engaged in the selection and evaluation task should ask the following questions:
    - Does the vendor have the facilities to manufacture the equipment, or is manufacturing "farmed out" to subvendors?
    - Who builds the essential parts, such as the filter elements, the mist extractors, other internals, and the vessel itself?
    - Who does the x-raying, hardness testing, ultrasonic examination, magnaflux examination, (both wet and dry, if required), stress relieving, hydrostatic testing, grit-blasting and painting, and final preparation for shipping?

6. *Value.* How important is proper performance of the separation equipment to the protection of downstream equipment? Certainly, a monetary value has to be placed on repair and maintenance of the downstream installation. To what extent would rotating equipment such as turbines, turbo-expanders, centrifugal or reciprocating compressors, internal combustion engines, dehydration, amine or molecular sieve units, refinery or petrochemical processes, meter runs, power plants, fired heaters, plant fuel, municipal fuel, and/or perhaps gas coming in from producing wells be affected by potential performance deficiencies of the separation equipment? What are prudent downtime risks, and what would be the cost of rectifying problems with downstream equipment caused by defective filtration equipment? A reliability-focused organization demands answers to these questions!

7. *Follow-up.* Who will ultimately make the determination if the goods specified and purchased are, in fact, the goods received? Will the responsibility change hands from selection to purchasing to operation with a relaxed regard for what was intended to happen and what is actually happening? In that case, only the very best and most conservatively designed piece of separation equipment should be purchased.

Contrary to conventional wisdom, there have been no "super breakthroughs" in the design of separation equipment in the past 30 years. On the other hand, considerable changes have been made in presentation and marketing methods over the past two or three decades. Some marketing claims as to how far the state of the art has advanced during the past several years, or even in recent months, are truly stretching the imagination. Beware, since they may simply be designed to sell spare parts and/or just stay alive in a highly competitive environment.

9.3.6 Life-Cycle-Cost Calculations

Life-cycle-cost calculations must be used to determine the wisest equipment choice. Life-cycle-based filter equipment cost is the total lifetime cost to purchase, install, operate, and maintain (including associated downtime), plus the downstream cost due to contamination from inadequately processed fluids or even the risk of damaging downstream equipment, and finally, the cost of ultimately disposing of a piece of equipment. A simplified mathematical expression might be

$$\mathrm{LCC} = C_{\mathrm{ic}} + C_{\mathrm{in}} + C_{\mathrm{e}} + C_{\mathrm{o}} + C_{\mathrm{m}} + C_{\mathrm{dt}} + C_{\mathrm{de}} + C_{\mathrm{env}} + C_{\mathrm{d}} \qquad (9.11)$$

where LCC = life-cycle cost
C_{ic} = initial cost, purchase price (system, pipe, auxiliary services)
C_{in} = installation and commissioning cost
C_{e} = energy costs ("incremental Δp"-related)
C_{o} = operation costs, if applicable
C_{m} = maintenance and repair costs
C_{dt} = downtime costs
C_{de} = incremental repair cost, downstream equipment
C_{env} = environmental costs
C_{d} = decommissioning and/or disposal costs

Energy, maintenance, and downtime costs depend on the selection and design of the filtration equipment, system design and integration with the downstream equipment, design of the installation, and the way the system is operated. Matching the equipment carefully with the process unit's or production facility's requirements can ensure the lowest energy and maintenance costs, and yield maximum equipment life.

9.3.7 Conclusions

The initial investment costs go well beyond the initial purchase price for the equipment. Investment costs include engineering, bid process (*bid conditioning*), purchase order administration, testing, inspection, spare parts inventory, and training and auxiliary equipment. The purchase price of the filtration equipment is typically less than 15% of the total ownership cost. Installation and commissioning costs include the foundations, grouting, connecting of process piping, connecting electrical or instrument wiring, and (if provided) connecting auxiliary systems.

But suppose now that a team of engineers goes through the planning, bidding, procurement, installation, and evaluation stages of the separation equipment and finds that it matches the requirements exactly. Then comes the spare parts purchasing stage, and at that point, cheap incompatible sets of fiberglass pipe insulation elements are bought. Suppose further that these are to be installed, when dictated, by the best operating practice assigned to the installation.

Chances are that the element manufacturer will have made all kinds of promises and that a few dollars will have been saved, but what happens when these substitutes are installed? There is no question about it—the separation equipment can no longer live up to the job specifications, and bad things start to happen at that point. So, to the reliability-focused and risk-averse user, life-cycle costs are of immense importance. In contrast, repair-focused users are interested primarily in the initial purchase price. But there is consensus among best-in-class industrial and process plants that only truly reliability-focused facilities will be profitable a few years from now, and only they will survive.

10

RECIPROCATING COMPRESSOR PERFORMANCE AND SIZING FUNDAMENTALS

From the preceding chapters we recall that most reciprocating compressors encountered in process, gas or oil production, and gas transmission applications use double-acting cylinders. This simply means that compression occurs on both the outward and inward strokes of the piston. This is accomplished using a packed piston rod firmly attached to a crosshead. The crosshead, in turn, is attached to the connecting rod via a wrist pin.

Reciprocating compressors offer the following advantages to the user:

- Flexibility in design configuration
- Good efficiency even in small sizes, at high pressures, and at part loads
- Operating flexibility over a wide range of conditions for a given configuration

Our objective is to introduce the reader to the basics of how to calculate reciprocating compressor performance and to present a methodology of estimating compressor size and power requirements. The methods given here are approximate by necessity, and the reader is encouraged to communicate with compressor vendors if more accurate results are required.

We begin by reviewing basic capacity and horsepower calculations and demonstrating the effect of design variables on the results of the calculations. Basic equations are presented that will enable readers to estimate capacity and horsepower along with frameload. Further information is given that will allow estimation of compressor size given some general information on compressor cylinders, strokes, rotative speeds, horsepower capacity, and rod load capability. The standard nomenclature used by the majority of U.S. compressor manufacturers has been selected for our calculations.

A Practical Guide to Compressor Technology, Second Edition, By Heinz P. Bloch

10.1 THEORETICAL MAXIMUM CAPACITY

The theoretical maximum capacity of a reciprocating compressor cylinder is given by

$$Q = 0.0509 \frac{P_s}{T_s} \frac{Z_{\text{std}}}{Z_s} (\text{DISP})[1 - \text{CL}(R^{1/N} - 1)] \tag{10.1}$$

where Q = capacity, million standard ft^3/day (ref. 14.7 psia, 520°R)
P_s = suction pressure, psia (flange)
T_s = suction temperature, °R
Z_{std} = compressibility factor at standard conditions
Z_s = compressibility factor at suction conditions
DISP = cylinder displacement, ft^3/min
CL = cylinder clearance volume as decimal fraction of displaced volume
R = pressure ratio across cylinder (flange to flange)
N = isentropic volume exponent at operating conditions (specific heat ratio for ideal gas)

The critical portion of Eq. (10.1) is the theoretical volumetric efficiency, defined as

$$\text{VE} = 1 - \text{CL}(R^{1/N} - 1) \tag{10.2}$$

This equation describes the variation of a given compressor capacity as a function of residual clearance volume, pressure ratio, and gas. The trends are:

- Decreases with increasing clearance
- Decreases with increasing pressure ratio
- Increases with increasing volumetric exponent

The other variables in the capacity equation are related to fluid density at the compressor cylinder inlet. Capacity increases with increasing inlet density.

Figures 10.1 and 10.2 demonstrate the variation of compressor capacity with clearance and pressure ratio. The compressor chosen for these and most of the other figures that follow has the following specifications:

- Bore = 20 in. (double acting)
- Stroke = 15 in.
- Clearance = 15%
- Rod diameter = 3 in.
- Rotative speed = 327 rpm
- Gas = methane
- P_s = 15 psia
- T_s = 560°R (100°F)

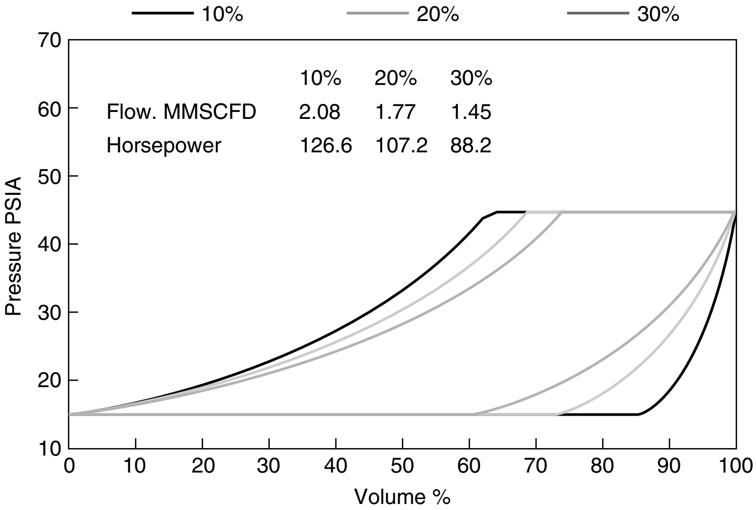

FIGURE 10.1 Effect of clearance. *(Dresser-Rand Company, Painted Post, N.Y.)*

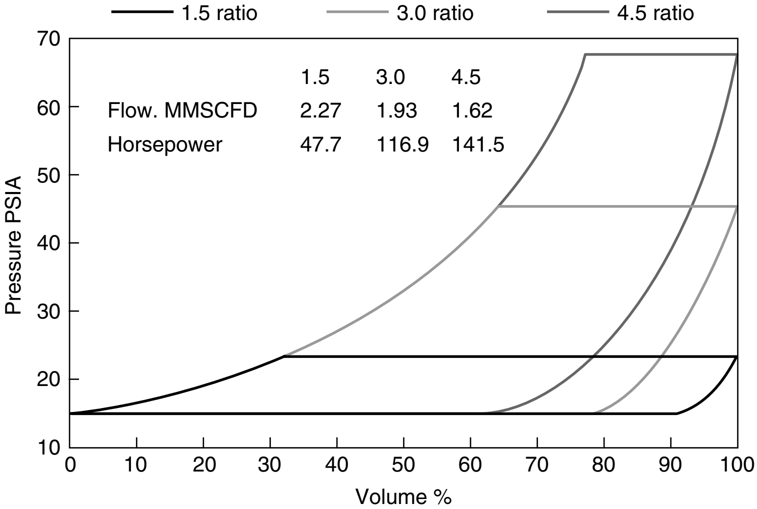

FIGURE 10.2 Effect of compression ratio. *(Dresser-Rand Company, Painted Post, N.Y.)*

10.2 CAPACITY LOSSES

Real compressors with valves, piston rings, packing, heat transfer, and attached piping do not pump ideal capacity. There are a number of loss factors that generally reduce the capacity. This section covers these factors and how they vary with design and operating parameters. The *p–V* diagrams reproduced in Fig. 2.43 graphically demonstrate the effect of most of the loss factors on capacity.

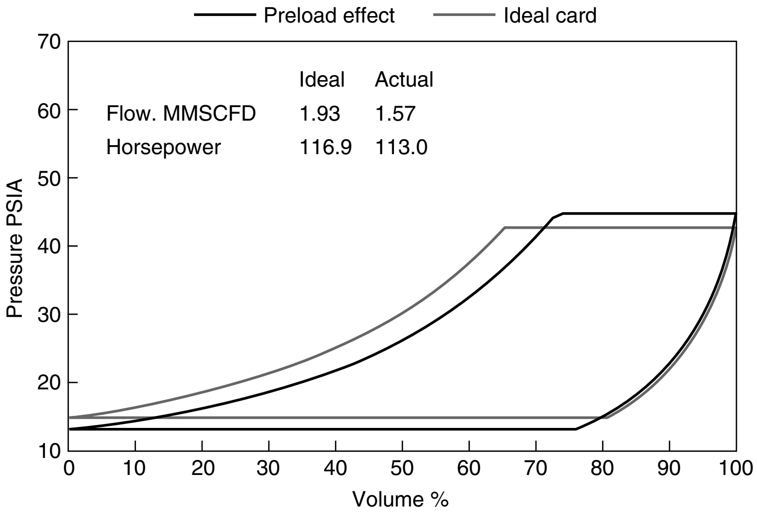

FIGURE 10.3 Effect of preload. *(Dresser-Rand Company, Painted Post, N.Y.)*

10.3 VALVE PRELOAD

As mentioned earlier, reciprocating compressor valves are essentially spring-loaded check valves. Manufacturing tolerance and reliability considerations cause the designer to introduce a positive preload. This means that the compressor must develop a small pressure drop across the valve in the direction of flow before the sealing element will begin to move. The effect of this is to increase the pressure ratio across the compressor cylinder. The pressure trapped in the cylinder will be higher than discharge pressure at minimum volume and lower than suction pressure at maximum volume. The net effect is twofold: (1) the pressure ratio across the cylinder is higher than expected, which decreases capacity by decreasing volumetric efficiency; and (2) the gas density in the cylinder at maximum volume is lower than expected while the density at minimum volume is higher than expected, resulting in reduced capacity.

Figure 10.3 demonstrates the effect. This effect is most pronounced at low suction pressures and decreases to the point where it is negligible at higher pressures. The designer must, however, know the details of the valve design to be used to accurately predict the preload effect on capacity.

10.4 VALVE AND GAS PASSAGE THROTTLING

Compressor valves and cylinder gas passages must see the flow that goes through the bore. Pressure losses are associated with this flow, and the suction losses have an effect on capacity. As each increment of fluid flows into the cylinder bore, it experiences a pressure drop. The process may be closely approximated as isenthalpic. Once each increment of fluid is in the cylinder, it must be recompressed to the pressure that exists at maximum volume. The work required to do this increases the temperature of the fluid so that it is higher at maximum volume than the suction temperature. This reduces the density at maximum volume and therefore the capacity.

The effect of discharge valve and passage flow losses on capacity is determined by whether all of the fluid that should flow out of the cylinder does so by the end of the stroke (minimum volume). There is a similar effect on the suction side. The impact of this on capacity is similar to the effect of valve preload.

Figures 10.4 and 10.5 demonstrate the capacity loss due to throttling. Figure 10.4 shows the same compressor configuration as that used previously. Figure 10.5 reflects the effect of increased rotating speed by shortening the stroke to 5.5 in. and increasing the speed to 892 rpm. The bump at the beginning of the valve event is an inertia effect. It is more pronounced at the higher rotative speed.

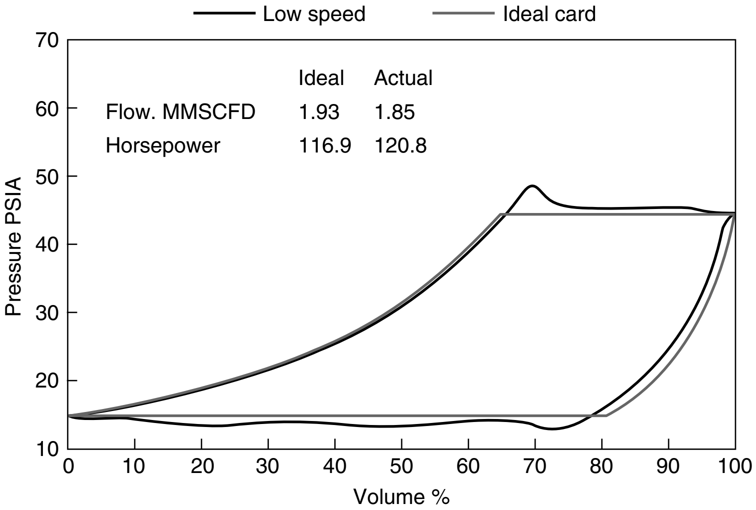

FIGURE 10.4 Effect of valve and passage flow losses, low speed. *(Dresser-Rand Company, Painted Post, N.Y.)*

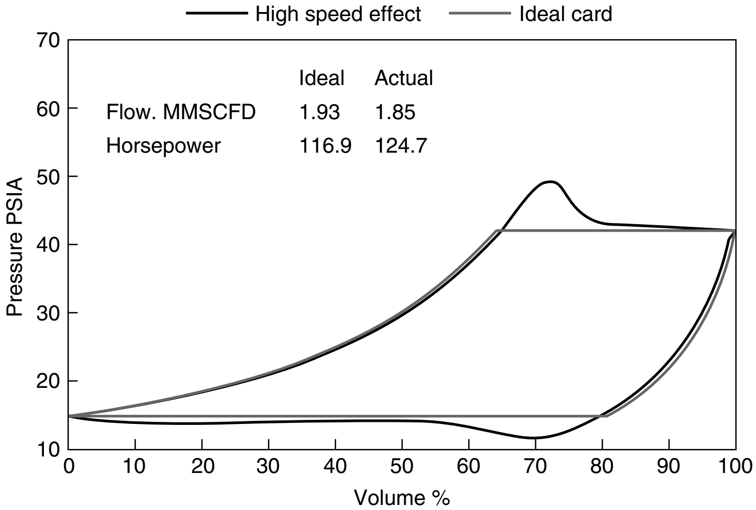

FIGURE 10.5 Effect of valve and passage flow losses, high speed. *(Dresser-Rand Company, Painted Post, N.Y.)*

The throttling capacity loss has an inverse relationship to flow efficiencies built into the valves and cylinder flow passages. Large and open valves and passages mean low pressure losses and low capacity loss. They generally mean higher clearances that also reduce capacity. Thus, low valve losses do not always improve capacity.

To predict the effect of valves on capacity accurately, we must know the details of the design being used. While we generally know the average velocity through the lift area, we must know how efficiently the valve design uses that area. The true loss is determined by what can be termed the *effective flow area*, defined as the product of geometric lift area and flow coefficient. The flow coefficient can vary widely from one valve design to another.

10.5 PISTON RING LEAKAGE

The compressor piston uses seals to minimize leakage. However, ring leakage does occur and has a detrimental effect on capacity. In a double-acting compressor, the effect is twofold: (1) As fluid leaks from the higher-pressure side of the ring, the capacity is reduced by loss of mass in the high-pressure end. This also increases the mass in the low-pressure end, thus decreasing the mass that will flow in through the suction valves. (2) The leakage process is closely approximated as isenthalpic. This has a tendency to increase the temperature in the low-pressure end of the cylinder. The result is lower density at maximum volume, further reducing capacity.

When the piston reverses and the high-pressure end becomes the low-pressure end, the process reverses. Thus, a small amount of gas is essentially trapped in the cylinder. The effect of piston ring leakage is shown in Fig. 10.6 for a double-acting cylinder. A single-acting cylinder will generally show higher leakage than a double-acting cylinder because the time-average pressure drop in one direction is higher. The temperature effect is also there if the inactive end of the cylinder is vented to the suction of the active end. This is normally the case.

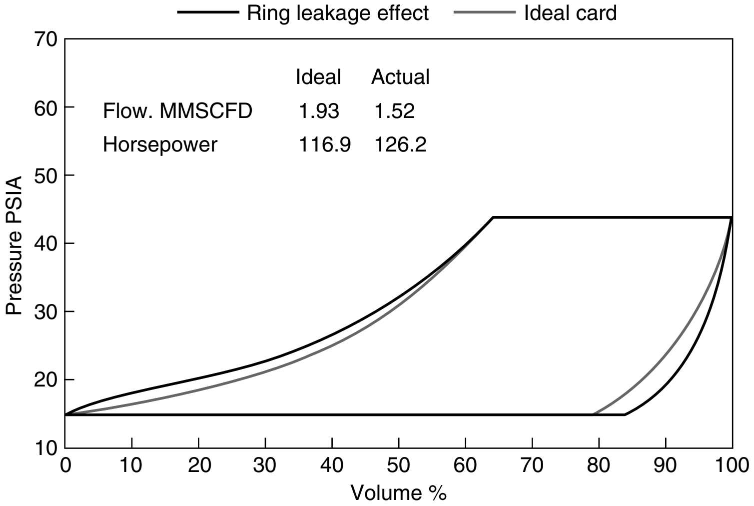

	Ideal	Actual
Flow. MMSCFD	1.93	1.52
Horsepower	116.9	126.2

FIGURE 10.6 Effect of piston ring leakage. *(Dresser-Rand Company, Painted Post, N.Y.)*

The effects of design and operating parameters on ring leakage are such that leakage:

- Decreases with increasing rotative speed
- Decreases with increasing bore
- Increases with decreasing molecular weight
- Increases with pressure ratio
- Decreases with the number of rings
- Is higher with nonlube construction

10.6 PACKING LEAKAGE

Compressors that use piston rods have packing. As in the case of piston rings, the designer attempts to minimize the leakage, but a small amount will occur unless the packing a buffer pressure has been introduced that can negate leakage from inside the cylinder. When the packing leaks, the effect on capacity is limited to the loss of fluid from the packed end of the cylinder. The effect is shown in Fig. 10.7.

The effects of operating and design parameters cause packing leakage to:

- Increase with increasing pressure level
- Increase with rod diameter
- Increase with decreasing molecular weight
- Decrease with increasing rotative speed

10.7 DISCHARGE VALVE LEAKAGE

Figure 10.8 demonstrates the effect of discharge valve leakage. Fluid leaks back into the cylinder bore from the discharge passage. This not only distorts the p–V diagram but also

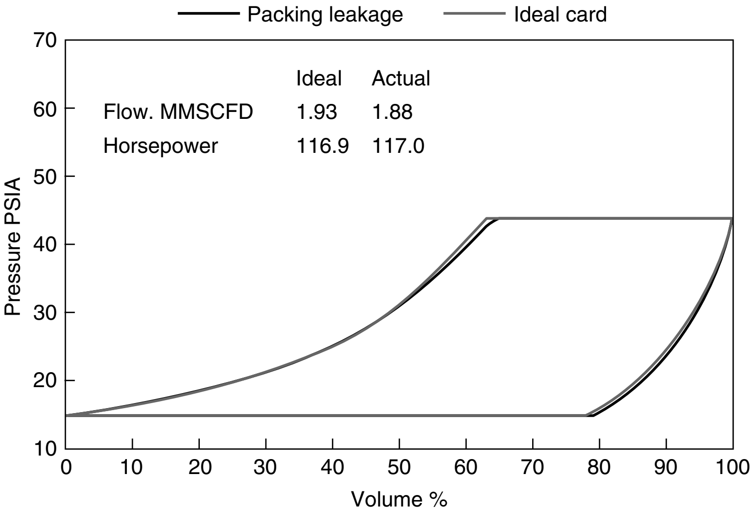

FIGURE 10.7 Effect of packing leakage. (*Dresser-Rand Company, Painted Post, N.Y.*)

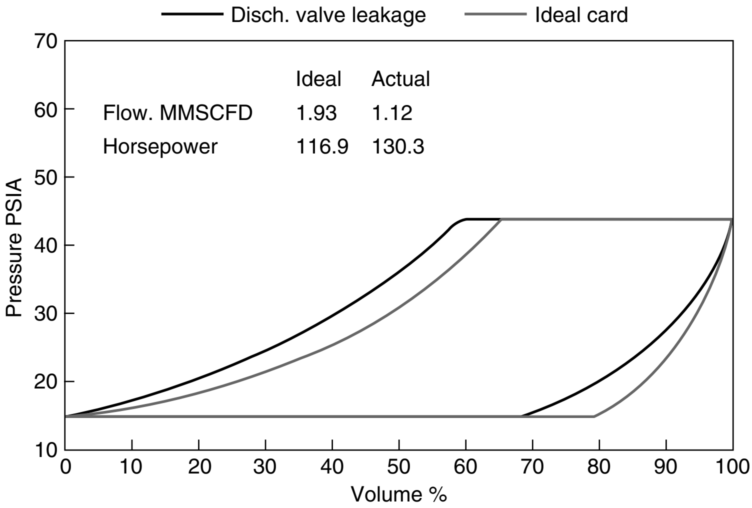

FIGURE 10.8 Effect of discharge valve leakage. (*Dresser-Rand Company, Painted Post, N.Y.*)

lets hot gas back into the cylinder. Both effects decrease capacity. As in the case of other leakage effects, the designer attempts to minimize valve leakage. The effect is so dramatic that zero leakage is a worthwhile goal.

Operating and design parameters have the following effect on discharge valve leakage:

- Increases with increasing pressure ratio
- Increases with decreasing molecular weight
- Decreases with rotative speed
- Decreases when plastic sealing elements are used

10.8 SUCTION VALVE LEAKAGE

Figure 10.9 shows the effect of suction valve leakage. Fluid leaks from the cylinder bore to the cylinder suction passage. The effect on capacity is similar to discharge valve leakage, and zero leakage is a worthwhile goal. The effects of operating and design parameters are identical to those of discharge valve leakage.

10.9 HEATING EFFECTS

Heating effects on capacity can be divided into two categories: (1) external heat transfer between the surroundings and the fluid prior to entering the cylinder, and (2) internal heat transfer between the cylinder walls, cooling medium, and the fluid while it is in the cylinder.

Heat transfer to or from the fluid prior to entering the cylinder bore has a direct effect on capacity by raising or lowering the temperature of the fluid trapped in the cylinder at maximum volume. As explained earlier, raising the temperature lowers the capacity, while lowering the temperature has the opposite effect. In fact, many operators intentionally lower inlet temperature to increase compressor throughput. This should be done with caution because there may be effects such as increased condensation that have undesirable side effects.

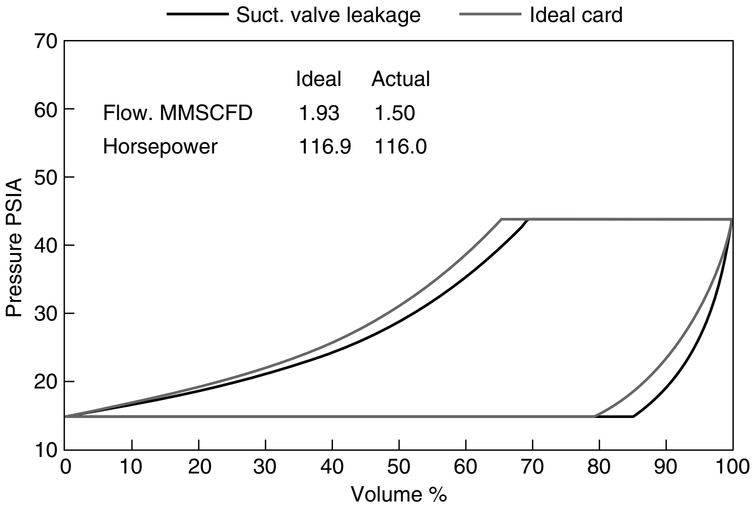

FIGURE 10.9 Effect of suction valve leakage. (*Dresser-Rand Company, Painted Post, N.Y.*)

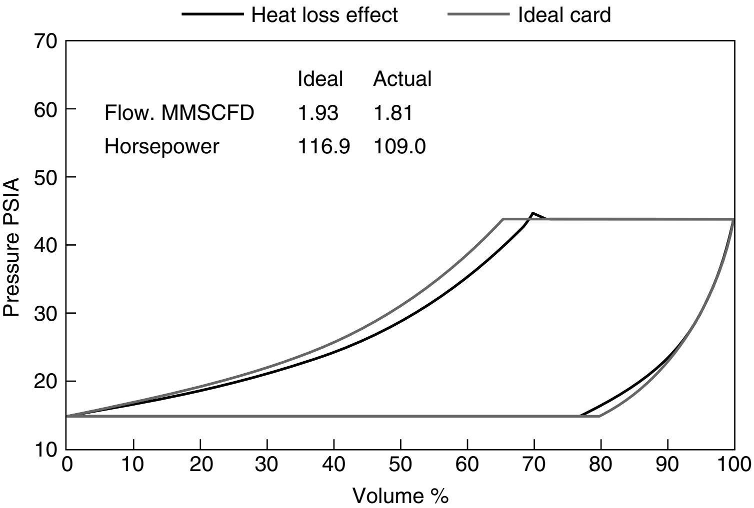

FIGURE 10.10 Effect of internal heat transfer. (*Dresser-Rand Company, Painted Post, N.Y.*)

Heat transfer internal to the cylinder bore can affect capacity both by affecting the temperature of the trapped fluid and the shape of the *p–V* diagrams. Figure 10.10 demonstrates the effect of net heat transfer from the gas while in the bore.

Although heat transfer and its resulting effects on capacity are complicated and extremely dependent on details of design, the following generalizations may be made and debated:

- For a given cylinder design, increasing rotative speed decreases heat transfer effects.
- For a given cylinder design at constant speed, increased fluid mass flow decreases heat transfer effects.

- For a given fluid at a given density, increasing cylinder bore decreases heat transfer effects.
- Increasing the differential temperature between the fluid and surroundings and/or cylinder coolant increases heat transfer effects.

10.10 PULSATION EFFECTS

Reciprocating compressors are unsteady flow machines. This time-varying flow is repeatable from one crankshaft rotation to the next. The resulting pressure variations in the connecting pipework, called *pulsations*, affect capacity. The basic effect is determined by the pressure the pulsations impose on the cylinder bore at maximum and minimum volumes. Like heat transfer, pulsations, can either increase or decrease capacity. The characteristics are:

- Higher pressure in the suction passage at maximum cylinder volume increases capacity.
- Higher pressure in the discharge passage at minimum cylinder volume decreases capacity.
- Lower pressure in the suction passage at maximum cylinder volume decreases capacity.
- Lower pressure in the discharge passage at minimum cylinder volume increases capacity.

Figure 10.11 shows the effect of pulsations for a particular set of circumstances. Predicting pulsations at the time of compressor sizing is virtually impossible. Therefore, the effects on capacity are limited by controlling pulsations to acceptable levels at a later stage of the design cycle.

With all of the potential effects of operating conditions and design features on compressor capacity, how are we to estimate compressor sizes without detailed knowledge? Fortunately, the effect of some parameters increases with speed, while the effect of other parameters decreases with speed. Generally, slow-speed compressor capacity is governed more by

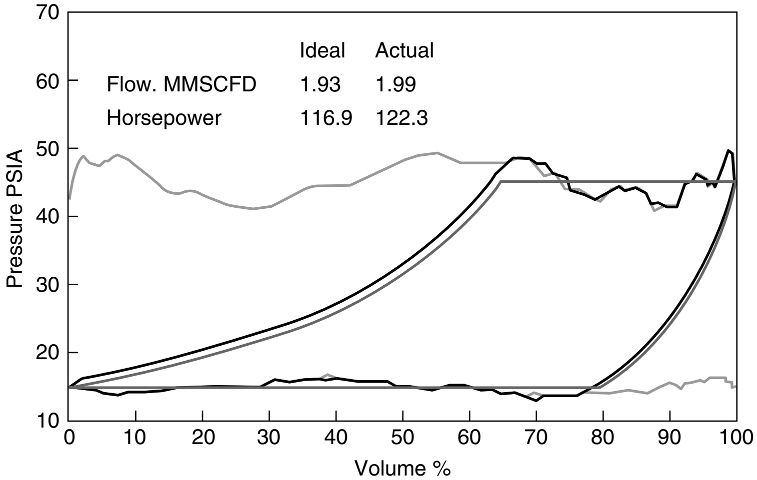

FIGURE 10.11 Effect of pulsation. (*Dresser-Rand Company, Painted Post, N.Y.*)

leakage and heat transfer effects, while high-speed compressor capacity is governed more by valve effects. We can, therefore, write a general equation to use for all reciprocating compressors as a first estimate. Expressed in MMscfd, this equation is

$$Q = 0.0509 \frac{P_s}{T_s} \frac{Z_{\text{std}}}{Z_s} (\text{DISP})[0.95 - \text{CL}(R^{1/N} - 1)] \tag{10.3}$$

This essentially states that any reciprocating compressor has a built-in 5% capacity loss. In some cases, this is a conservative estimate, and in others, it is liberal. This is a starting point only. For nonlube and/or single-acting service, an additional loss of 4% should be used in each case.

10.11 HORSEPOWER

We base the compression efficiency on the theoretical isentropic horsepower:

$$\text{hp} = 43.67Q \frac{N}{N-1} (R^{(N-1)/N} - 1) \tag{10.4}$$

Inspection of this equation indicates that the major effects on isentropic power are the capacity Q and the pressure ratio R: (1) horsepower increases with capacity, and (2) horsepower increases with pressure ratio until the decrease in capacity with increasing ratio becomes the overriding factor.

Figures 10.1 and 10.2 demonstrated that theoretical horsepower depends on volumetric clearance and pressure ratio.

10.12 HORSEPOWER ADDERS

The same factors that affect capacity have an adverse effect on horsepower. It is appropriate to call these *adders*, as opposed to the more popular term, *losses*. The reason is that the horsepower actually consumed by a compressor is almost always higher than isentropic.

Horsepower adders have three effects on the horsepower required for compression. The first effect is to add power to the suction and discharge portions of a p–V diagram. This is caused by valve losses. The second effect is to distort the compression and reexpansion lines. This is caused by leakage and internal heat transfer. The third effect is simply to add the power required to overcome mechanical friction.

Summing up the horsepower adders, we find major effects from the valving, whereas other effects, from leakage and heating, are relatively minor in all but a few applications. These are confined to low-density and low-suction pressure applications such as vacuum pumps. Friction can be treated as a direct adder. With these considerations, we can use the following equation to estimate horsepower requirements of a compressor cylinder and its associated running gear:

$$\text{bhp} = 43.67Q \frac{N}{N-1} [R^{(N-1)/N} - 1] \frac{1}{N_c} \frac{1}{N_m} \tag{10.5}$$

where N_c is the compression efficiency and N_m is the mechanical efficiency.

Compression efficiency varies with many factors, and a unique relationship is difficult to define. However, companies such as Dresser-Rand recommend using 0.85 as a first guess for lubricated service. Deduct an additional 0.05 for nonlube and/or single-acting service. Mechanical efficiency is generally accepted to be approximately 0.95, and this value is recommended by most manufacturers.

Readers requiring a more accurate analysis of horsepower may wish to contact the compressor vendors. There are many design variations between vendors that can have significant influence on actual power.

10.13 GAS PROPERTIES

10.13.1 Ideal Gas

As described in Section 1.15, many compression processes can be described using the ideal gas law:

$$PV = mT\frac{10.73}{\mathrm{MW}} \tag{10.6}$$

where P = pressure, psia
V = volume, ft^3
m = mass, lb$_\mathrm{m}$
MW = molecular weight, lb$_\mathrm{m}$/mol
T = temperature, °R

This, plus a description of an isentropic process, enables us to describe a compression process theoretically. The equation is

$$PV^N = \text{constant} \tag{10.7}$$

where N is the specific heat ratio.

The discharge temperature may be estimated as the isentropic temperature at the end of the compression process. This is given by

$$T_d = T_s R^{(N-1)/N} \tag{10.8}$$

where T_d = discharge temperature, °R
T_s = suction temperature, °R
R = pressure ratio

10.13.2 Real Gas

No gas is truly ideal. To approximate an ideal gas, we use a concept called *compressibility factor*. This factor is used to represent the difference between a real gas and an ideal gas. Using this factor, we rewrite Eq. (4.1) as

$$PV = ZmT\frac{10.73}{\mathrm{MW}} \tag{10.9}$$

where Z is the compressibility factor. This factor is obtained using a suitable equation of state that more accurately describes gas properties.

The isentropic process is still described as

$$PV^N = \text{constant} \tag{10.7}$$

N is now the isentropic volumetric exponent defined by real gas properties.

The discharge temperature is described by

$$T_d = T_s R^{(N_t - 1)/N_t} \tag{10.10}$$

where N_t is the isentropic temperature exponent defined by real gas properties.

10.14 ALTERNATIVE EQUATIONS OF STATE

Over the years, there have been many equations of state proposed. For most gases, equations of state or compressibility methods based on work by Redlich–Kwong, the American Petroleum Institute, Peng–Robinson, Benedict–Webb–Rubin, or Lee–Kessler are recommended. Although detailed discussion of these calculation methods is outside the scope of this book, we should note that every one of these methods falls apart for all gases when operating in the dense phase. This is generally above and to the left of the liquid–vapor dome on the temperature–entropy diagram. When this is the case, we usually resort to National Bureau of Standards *T–S* diagrams for pure gases.

For gas mixtures in the dense phase, it is recommended to use specialized methods such as the National Bureau of Standards DMIX software for defining real properties. An alternative source of real gas properties for unusual mixtures might be a user of these mixtures. Users have often conducted research to define these properties to accurately design processes.

10.15 CONDENSATION

Many fluids that must be compressed contain saturated water and/or hydrocarbon vapors. When this is the case, we must evaluate the quantity of fluid that will condense in the heat exchangers used to remove the heat of compression downstream of the compressors. Evaluating condensed water vapor is relatively easy, and most computerized performance models handle this.

Hydrocarbon condensation can be evaluated by several software packages. Among them are NGPSA (National Gas Processors Association), Process (Simulation Sciences), and Chemshare. Most compressor vendors have one or more of these programs and use them when condensation is suspected.

10.16 FRAME LOADS

Most compressors have limitations on the loading imposed by the compression process. This loading results from the differential pressure across the piston. The loading seen by the frame is dependent on pressures internal to the cylinders. However, at the early stage of compressor sizing, the investigator will only know the pressures at the cylinder flanges. We can get a good idea of what class of machine will be required from calculations based on flange pressures.

For a double-acting compressor, the frame loads are calculated by

$$\text{tensile load} = P_d(A_p - A_r) - P_sA_p + P_aA_r \qquad \text{lb} \tag{10.11}$$

$$\text{compressive load} = P_dA_p - P_s(A_p - A_r) - P_aA_r \qquad \text{lb} \tag{10.12}$$

where P_d = discharge pressure, psia
A_p = piston area, in^2
A_r = piston rod area, in^2
P_s = suction pressure, psia
P_a = atmospheric pressure, psia

Most compressors require the load to reverse so that the load is tensile in one part of the cycle and compressive during the rest of the cycle. Failure to reverse will result in crosshead pin and/or bearing problems. The degree of reversal required for reliable operation depends on details of design. If the ratio of higher load to lower load is 5 : 1 or less, reversal will be adequate to allow proper lubrication of the pin and bearing. Some designs allow higher ratios, but the higher the ratio, the more sensitive the design will be. Caution is recommended in applying this criterion, as crosshead pin reversal is affected by reciprocating inertia as well.

If reversal problems are encountered, special design considerations are in order. As mentioned earlier, single-acting cylinders, tailrods, divided cylinders, or tandem cylinders can be used to overcome reversal problems.

Table 10.1 gives a typical selection of strokes, rod diameters, speeds, brake horsepower per crank, number of cranks, and maximum cylinder bores to use in initial sizing calculations. The frame loads given are less than the maximum allowable, to leave a margin for internal pressures and relief valve considerations. The compressor speeds are given as recommended maximum 60-Hz synchronous speeds for electric motor drives. Also included are horsepower per throw and maximum number of throws available.

10.17 COMPRESSOR DISPLACEMENT AND CLEARANCE

Compressor displacement for a double-acting cylinder is calculated by

$$\text{DISP} = (2A_p - A_r)S\,\frac{\text{rpm}}{1728} \qquad \text{cfm} \tag{10.13}$$

where A_p = piston area, in^2
A_r = piston rod area, in^2
S = stroke, in.
rpm = rotative speed

TABLE 10.1 Typical Frame Sizes and Geometries Available from Major Reciprocating Compressor Manufacturers

Frame Symbol	Frame Load (lb)	Stroke (in.)	Speed (rpm)	Maximum Number of Throws	Bhp per Crank	Rod Diameter (in.)	Maximum Cylinder Bore (in.)
			High-Speed Separable Frames				
A	26,500	5.0	1200	4	480.0	2.00	22.50
B	50,000	6.0	1200	6	1000.0	2.50	26.50
			Electric Drive Frames				
C	10,000	6.0	720	2	75.0	1.50	14.00
D	22,000	12.0	400	4	600.0	2.00	27.50
E	44,000	15.0	360	6	800.0	3.00	42.00
F	72,000	15.0	360	8	1900.0	3.50	42.00
G	90,000	15.0	360	10	2400.0	4.00	42.00
H	145,000	15.0	360	10	3300.0	5.00	42.00
I	170,000	15.0	360	10	4900.0	5.25	42.00
			Integral Engines				
J	80,000	19.0	300	5	1000.0	4.00	17.50
K	105,000	19.0	330	8	1200.0	4.50	17.50

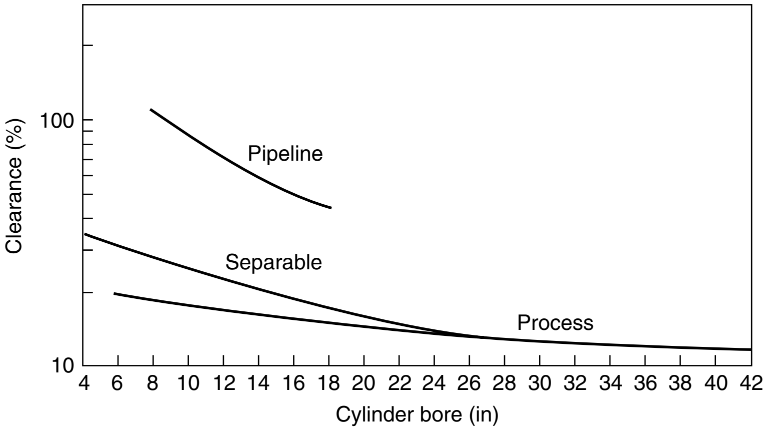

FIGURE 10.12 Type of cylinder vs. clearance. *(Dresser-Rand Company, Painted Post, N.Y.)*

The volumetric cylinder clearance is an important factor in calculating compressor capacity. For initial sizing purposes, it is recommended that the values given in Fig. 10.12 be used to calculate capacity. This figure gives approximate clearance values for three classes of compressors. This allows the user to select from high-speed machines used mainly in gas fields, or medium- and low-speed machines used in process and large enhanced oil recovery projects, and low-speed natural gas transmission pipeline machines.

10.18 STAGING

As was brought out earlier in this book, the first decision to be made is how many stages of compression to use. This depends on many factors, and the evaluation is based on the following considerations:

- Discharge temperature
- Process considerations (sidestreams)
- Overall efficiency
- Frame loads
- Volumetric efficiency

The two factors that have the greatest effect on compressor reliability are discharge temperature and volumetric efficiency. When discharge temperatures exceed 300°F (149°C) on compressors using mineral oil for cylinder lubrication, we find that reliability decreases. This is due primarily to breakdown of lubricating oil and the resulting deposits causing high wear and valve problems. Diester-based synthetic lubricants would provide increased reliability and should be given serious consideration.

We had seen earlier that whenever the volumetric efficiency gets too low, some of the factors that affect capacity and horsepower become quite large compared to the ideal conditions. This and compressor valve reliability on the discharge side causes us to limit the discharge volumetric efficiency at any operating condition to a minimum of 0.1, or 10%. The discharge volumetric efficiency is given by

$$\text{VED} = \frac{\text{VE}}{R^{1/N}} \tag{10.14}$$

In many applications that could be handled with a single-stage compressor, power savings are available by using a two-stage approach with an intercooler between stages. The intercooler removes the heat of compression after the first stage. This increases the gas density, which reduces the bore requirement for the second stage. The result is that lower power is required in the second stage. However, the savings are not as good as one would calculate on an isentropic basis. There are interstage pressure drops and a second set of valve effects to take into account.

Remember that the equations presented earlier relate to cylinder flange pressures. It will be necessary to add pressure drops for initial suction, interstages, and final discharge to account for pulsation vessel, cooler, and piping losses. It is customary to use 1% of line pressure for each element in the system. For example, for initial suction pressure, assume a 1% loss to account for a suction vessel.

For an interstage system close-coupled to the cylinders, use 1% for the first-stage discharge vessel, 1% for the intercooler, and 1% for the second-stage suction vessel, for a total of 3%. If the intercooler is remote mounted, use an additional 1% for the piping, for a total of 4%. For the final discharge, use 1% for the vessel, 1% for the aftercooler (if used), and 1% for piping if the aftercooler is remote-mounted.

10.19 FUNDAMENTALS OF SIZING

The following step-by-step method is recommended for compressor sizing. Although it may appear that sizing is a matter of following cookbook rules, considerable judgment and experience are required to do it well. To perform reciprocating compressor screening and sizing calculations, the following information must be given:

1. Capacity requirement (convert to MMscfd)
2. Initial suction pressure and temperature
3. Cooling medium temperature and desired approach temperature (determines interstage suction temperatures)
4. Final discharge pressure
5. Sidestream capacity; temperature and pressure (if used)
6. Gas analysis
7. Any special application information (relates to particular user requirements)

10.19.1 Number of Stages

Calculate the total pressure ratio R_t. If it exceeds 5, two or more stages are probably required. Assume no more than an average of 3 as the ratio per stage unless the discharge temperature allows. To determine the number of stages, use

$$R_s = (R_t)^{1/N_s} \tag{10.15}$$

where R_s = stage pressure ratio
R_t = total ratio
N_s = number of stages

Use Eq. (10.7) and the suction temperatures given to check for acceptable discharge temperatures. If the discharge temperatures are not acceptable, increase the number of stages until they are. Remember to add the appropriate pressure losses previously mentioned.

10.19.2 Approximate Horsepower

Using the capacity and number of stages, use Eq. (10.5) to calculate the horsepower. This can be done by calculating each stage independently using the appropriate isentropic volumetric exponent. This may change for each stage, depending on pressures, temperatures, and gas analysis. Adding the individual stages together will give the total horsepower.

Using Table 10.1 allows us to determine what frame size is needed based on horsepower per throw and the total number of throws available. If the individual stage horsepowers and/or the total horsepower exceed what is available, we will need to use more than one throw per stage and/or more than one machine.

Another consideration at this point is the number of capacity steps demanded required by process considerations. If more than five are required, we will generally need more than one cylinder per stage. If the process designers want multiple steps, challenge them. Multiple steps will drive the cost of the compressor up and in many cases will increase compressor size while decreasing efficiency and reliability.

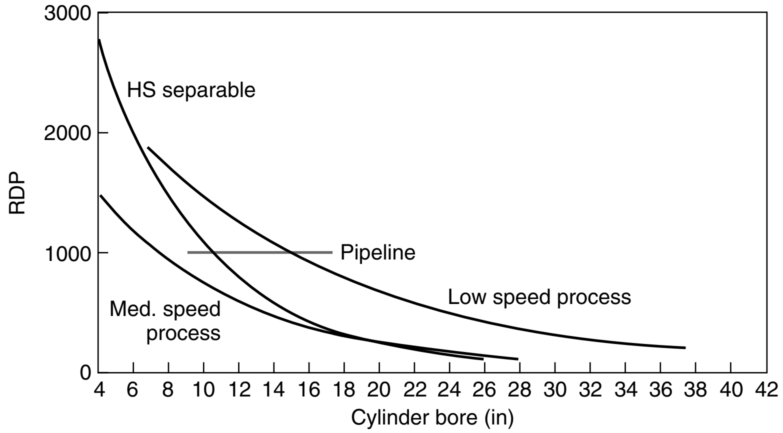

FIGURE 10.13 Size of cylinder vs. rated discharge pressure. (*Dresser-Rand Company, Painted Post, N.Y.*)

10.19.3 Cylinder Bore Requirements

Using Fig. 10.12 and stroke and speed information from Table 10.1, determine the cylinder bores for each stage. This is done by trial and error using Eqs. (10.3) and (10.13) to calculate cylinder bores required for various clearances, as given in Fig. 10.12. This may best be accomplished by guessing a bore above what is required and one below, calculating the capacity, and plotting capacity vs. bore. The bore required can then be determined by the capacity required. Remember that the capacity required must be divided by the total number of cylinders used for each stage. A useful hint is that the compressor vendor can usually add clearance to a given cylinder to meet specific operating conditions. This is usually preferred to selecting nonstandard bore diameters.

Figure 10.13 indicates pressure ratings for various cylinder bores and classes of machine. This information is for cast cylinders only. Higher-pressure forged steel cylinders are available. Check this against the discharge pressure for each stage. If any pressure ratings are exceeded, either increase the number of cylinders per stage or unbalance the pressure ratios on various stages to meet the requirements. The latter move means backing up to our earlier segment dealing with determination of stages, checking temperatures, and proceeding from there as before.

10.19.4 Frame Load

Using the bores calculated and Eq. (10.11), check that the frame loads meet the limits in Table 10.1 and the reversal requirements explained earlier. If frame loads are exceeded, more cylinders will be required on the stages, violating the maximums. The alternative may be to unbalance the pressure ratios if one stage exceeds the limits by a small amount. If the ratios are unbalanced, return to the segment explaining how stage requirements are arrived at, recheck the temperatures, and proceed.

If the frame load reversal criteria are not met, the remedies suggested in Section 10.16 may be tried. Remember that if a single-acting cylinder is used to correct reversals, the horsepower per throw in Table 10.1 is limited to 60% of the indicated value. If a divided cylinder is used, the horsepowers of the two stages must be added together. In any event, the frame load equation, Eq. (10.11), and displacement equation, Eq. (10.13), must be modified to reflect the geometric situation. Again, if the reversal criteria are marginally violated, it may be possible to unbalance ratios to correct it. Return to the segment explaining how stage numbers are determined, check temperatures and proceed.

10.19.5 Vendor Confirmation

If all of the criteria described above are met, you have selected a compressor that will fit the application. The next problem is to get confirmation from the compressor vendors that this selection is valid. Remember that we have outlined approximate methods and approximate information. Many design variations are available that may affect this preliminary sizing. What you have is a reasonable estimate of what you will get.

10.20 SIZING EXAMPLES

We are now ready to look at two examples of compressor sizing. They are intended to demonstrate the principles and methodology presented in the preceding pages. The equations used to make the calculations are either given directly or the equation numbers are given in parentheses after the result. It should be noted that some of the equations given earlier may be rearranged to find the unknown value. This is particularly true of the equation for piston displacement, Eq. (10.13).

It is recommended that the reader follow through these examples in detail to gain a feel for the methods used and the influence on performance introduced by varying the important parameters. We have elected to use only three significant figures in the calculations since this exceeds the possible accuracy of these methods. Obviously, the accuracy of more detailed performance calculation methods, including those of PC-based computer programs, would be considerably greater.

Example 10.1

1. *Given:*

Capacity required = 20 MMscfd
Suction pressure = 75 psia
Suction temperature = 100°F
Air-to-gas coolers
Max. ambient = 110°F
Approach = 30°F
Discharge pressure = 500 psia
Barometer = 14.7 psia
No sidestream
Gas is pure methane

Design requirements:

1% initial suction pressure drop
3% interstage pressure drop
2% final pressure drop

2. Determine the number of stages.

Total ratios = 500/75 = 6.67 [from Eq. (10.15)]
Stage ratio (two stages) = 2.58

Correcting for pressure drops (from Section 10.18):

First suction = 75 × 0.99 = 74.3 psia
First discharge = 75 × 2.58 × 1.03 = 199 psia
Second suction = 199 × 0.97 = 193 psia
Second discharge = 500 × 1.02 = 510 psia
First-stage ratio = 199/74.3 = 2.68
Second-stage ratio = 510/193 = 2.64

Checking discharge temperatures [from Eq. (10.8)]:

First stage = 235°F
Second stage = 282°F

3. Determine the approximate horsepower.

First stage (N_c = 0.85, N_m = 0.95) [from Eq. (10.5)]: bhp = 1190
Second stage (N_c = 0.85, N_m = 0.95): bhp = 1170
Total bhp: 2360

From Table 10.1 we select the higher power, separable frame, and plan on using four throws.

4. Determine the bore sizes.

First stage (two cylinders):
Rated discharge pressure = 199 psia (minimum)
Maximum bore (Fig. 10.13) = 21.5 in.
Clearance (Fig. 10.12) = 13%
Displacement = 3000 cfm/cyl [from Eq. (10.13)]
Capacity (two cylinders) = 32.4 MMscfd [from Eq. (10.3)]
New displacement = 3000 ×20/32.4 = 1850 cfm/cyl
Approximate piston area = 224 in^2 [from Eq. (10.13)]
Bore = 16.9 in.

We will use a 17-in. bore:

Clearance (Fig. 10.12) = 19%
Displacement = 1870 cfm/cyl [from Eq. (10.13)]
Capacity (two cylinders) = 18.4 MMscfd [from Eq. (10.3)]
New displacement = 1870 × 20/18.4 = 2030 cfm/cyl
Approximate piston area = 246 in^2 [from Eq. (10.13)]
Bore = 17.7 in.

We will use a 17.75-in. bore:

Clearance (Fig. 10.12) = 18%
Displacement = 2040 cfm/cyl [from Eq. (10.13)]
Capacity (two cylinders) = 20.4 MMscfd [from Eq. (10.3)]

For rough sizing, this is accurate enough.

Second stage (two cylinders)

Rated discharge pressure = 510 psia (minimum)
Maximum bore (Fig. 10.13) = 15 in.
Clearance (Fig. 10.12) = 20%

Since we have the first stage sized, we can quickly estimate the second stage using the suction density ratio.

Estimated displacement = $2040 \times 74.3 \times 600/(193 \times 560) = 841$ cfm/cyl
Approximate piston area = 103 in^2 [from Eq. (10.13)]
Bore = 11.45 in.

We will use a 11.5-in. bore:

Clearance (Fig. 10.12) = 23%
Displacement = 845 cfm/cyl [from Eq. (10.13)]
Capacity (two cylinders) = 19.1 MMscfd [from Eq. (10.3)]
New displacement = $845 \times 20/19.1 = 885$ cfm
Approximate piston area = 109 in^2 [from Eq. (10.13)]
Bore = 11.8 in.

We will use a 12-in. bore:

Clearance (Fig. 10.12) = 22%
Displacement = 922 cfm/cyl [from Eq. (10.13)]
Capacity (two cylinders) = 21.1 MMscfd [from Eq. (10.3)]

At this point, we could further iterate on cylinder clearance and find that a 12-in. bore with 25% clearance would produce 20.1 MMscfd. However, for our purposes, we have the information we need to complete our job.

5. Check the frame loads and reversals.

First stage:

Tensile load = 30,000 lb [from Eq. (10.11)]
Compressive load = 31,100 lb [from Eq. (10.12)]

Second stage:

Tensile load = 33,400 lb [from Eq. (10.11)]
Compressive load = 36,700 lb [from Eq. (10.12)]

These frame loads are well within the 50,000-lb application limit we set for this frame, and the reversals are excellent. There is the potential for saving money on this application if a lighter frame were available to do this job.

Our final results are:

First stage (two cylinders): 17.75-in. bore × 6-in. stroke
Second stage (two cylinders): 12-in. bore × 6-in. stroke
Driver capability: minimum 2360 hp at 1200 rpm

Example 10.2

1. *Given:*

Capacity = 45.4 MMscfd
Suction pressure = 93.3 psia
Suction temperature = 110°F
Cooling water = 100°F
Approach temperature = 10°F
Final discharge pressure = 1940 psia
Sidestream capacity = 20.4 MMscfd
Sidestream pressure = 208 psia
Sidestream temperature = 110°F

Gas analysis:

Mainstream 83.2% H_2, MW = 6.83, $T_c = -327°F$, $P_c = 262$ psia
Sidestream 82.4% H_2, MW = 7.79, $T_c = -315°F$, $P_c = 266$ psia

Design conditions:

Max. piston speed = 850 ft/min
Initial pressure drop = 1%
Interstage pressure drop = 3%
Final pressure drop = 1%
Max. discharge temp. = 250°F
Atmospheric pressure = 14.4 psia

2. Determine the number of stages. The first stage is determined by the sidestream.

First-stage suction pressure = 0.99 ×93.3 = 92.4 psia
First-stage discharge pressure = 1.03 × 208 = 214 psia
Pressure ratio = 214/92.4 = 2.32

Gas properties:

$N_v = 1.33$ (API)
$N_t = 1.32$
$Z_s = 1.00$
Discharge temperature = 239°F [from Eq. (10.10)]

The rest of the machine is now considered.

Total ratio $R_t = 1940/208 = 9.33$
Stage ratio (two stages) = 3.05 [from Eq. (10.15)]

Second-stage gas properties:

$N_v = 1.32$ (API)
$N_t = 1.30$
$Z_s = 1.00$
Second-stage discharge temperature = 277°F [from Eq. (10.10)]

The discharge temperature is too high. We will use three stages.

Stage ratio (three stages) = 2.11
Second-stage suction pressure = 208 psia
Second-stage discharge pressure = $1.03 \times 208 \times 2.11 = 452$ psia
Second-stage ratio = $452/208 = 2.17$
Second-stage discharge temperature = 222°F [from Eq. (10.10)]
Third-stage suction pressure = $0.97 \times 452 = 438$ psia
Third-stage discharge pressure = $1.03 \times 2.11 \times 438 = 952$ psia
Third-stage ratio = $952/438 = 2.17$

Third-stage gas properties:

$N_v = 1.35$
$N_t = 1.31$
$Z_s = 1.01$
Third-stage discharge temperature = 225°F [from Eq. (10.10)]
Fourth-stage suction pressure = $0.97 \times 952 = 923$ psia
Fourth-stage discharge pressure = $1.01 \times 1940 = 1960$ psia
Fourth-stage pressure ratio = $1960/923 = 2.12$

Fourth-stage gas properties:

$N_v = 1.42$
$N_t = 1.32$

$Z_s = 1.02$
Fourth-stage discharge temperature = 224°F [from Eq. (10.10)]

All stages meet the temperature criteria.

3. Determine the approximate horsepower. Using a compression efficiency of 0.85 and a mechanical efficiency of 0.95, we find, from Eq. (10.5):

First-stage horsepower = 2570
Second-stage horsepower = 3390
Third-stage horsepower = 3450
Fourth-stage horsepower = 3420
Total = 12,800

The piston speed maximum of 850 excludes using 15-in. stroke at 360 rpm. Therefore, we will use 15-in. stroke at 327 rpm (818 ft/min). The 145,000-lb frame is just short on horsepower per throw (2930 at 327 rpm), so we will try the 170,000-lb frame with four throws.

4. Determine the cylinder bore requirements.

First stage:

Minimum rated discharge pressure (RDP) = 214 psia
Maximum bore (Fig. 10.13) = 37 in.
Clearance (Fig. 10.12) = 12%
Displacement = 6040 cfm [from Eq. (10.13)]
Capacity = 42.1 MMscfd (note that $Z_{\text{std}} = 1.0$) [from Eq. (10.3)]

This is less than the required capacity. We will need two cylinders and a minimum five-throw frame.

New displacement = 6040 × 45.4/42.1 = 6510 cfm
Piston area (one cylinder) = 584 in^2 [from Eq. (10.13)]
Bore = 27.3 in.

We will use 28 in.

Clearance = 13%
Displacement (two cylinders) = 6870 [from Eq. (10.13)]
Capacity (two cylinders) = 47.3 MMscfd [from Eq. (10.3)]

We will use this bore and add clearance to match capacity.

Second stage:

Minimum RDP = 452 psia
Maximum bore (Fig. 10.13) = 26 in.
Clearance (Fig. 10.12) = 13%

Displacement = 2950 cfm [from Eq. (10.13)]
Capacity = 46.4 MMscfd [from Eq. (10.3)]

This is less than the required capacity. We will need two cylinders and a minimum six-throw frame.

New displacement (two cylinders) = 2950 × 65.8/46.4 = 4180 cfm
Piston area (one cylinder) = 379 in^2 [from Eq. (10.13)]
Bore = 22.0 in.

We will use 22.0 in.

Clearance (Fig. 10.12) = 14%
Displacement (two cylinders) = 4190 cfm [from Eq. (10.13)]
Capacity = 65.2 MMscfd [from Eq. (10.3)]

This is within 1% of the required capacity, and we will use this bore.

Third stage: The approximate displacement is determined by the second-stage displacement times the density ratio.

Approximate displacement = 4190 × 208/438 = 1990 cfm
Piston area = 361 in^2 [from Eq. (10.13)]
Bore = 21.4 in.

A minimum RDP of 952 psia is required. The maximum bore from Fig. 10.13 is 16 in. We will need two cylinders and a minimum seven-throw frame.

Piston area (one cylinder) = 186 in^2 [from Eq. (10.13)]
Bore = 15.4 in.

We will use 15.5 in.

Clearance (Fig. 10.12) = 15%
Displacement (two cylinders) = 2020 cfm [from Eq. (10.13)]
Capacity = 65.2 MMscfd [from Eq. (10.3)]

This is within 1% of the required capacity, and we will use this bore.

Fourth stage: The approximate displacement is determined by the third-stage displacement times the density ratio. We will follow the lead set by the other three stages and use two cylinders requiring an eight-throw frame.

Approximate displacement (two cylinders) = 2020 × 438/952 = 929 cfm
Piston area (one cylinder) = 92.6 in^2 [from Eq. (10.13)]
Bore = 10.9 in.

A minimum RDP of 1960 psia is required. This is above the RDP for a 10.9-in. bore. We will have to use a forged steel cylinder to get the required RDP. We will use an 11-in. bore:

Clearance (Fig. 10.12) = 18%
Displacement (two cylinders) = 956 cfm [from Eq. (10.13)]
Capacity (two cylinders) = 65.7 MMscfd [from Eq. (10.3)]

This is within 1% of the required capacity, and we will use this bore.

5. Check the frame loads.

First stage:
Tensile load = 70,600 lb [from Eq. (10.11)]
Compressive load = 76,600 lb [from Eq. (10.12)]

S*econd stage:*
Tensile load = 83,300 lb [from Eq. (10.11)]
Compressive load = 96,900 lb [from Eq. (10.12)]

Third stage:
Tensile load = 76,700 lb [from Eq. (10.11)]
Compressive load = 106,000 lb [from Eq. (10.12)]

Fourth stage:
Tensile load = 56,400 lb [from Eq. (10.11)]
Compressive load = 118,000 lb [from Eq. (10.12)]

These loads are well below the 170,000-lb maximum we selected. We can use the 145,000-lb frame with adequate margin. The reversals are also within acceptable limits.

6. Make the selection. Our compressor has the following characteristics:

Frame: eight-throw, 15-in. stroke, 145,000-lb frame load
First-stage cylinder: 28-in. bore, two required
Second-stage cylinder: 22-in. bore, two required
Third-stage cylinder: 15.5-in. bore, two required
Fourth-stage cylinder: 11-in. bore, two required

Driver: 327-rpm synchronous motor with a minimum power capability of 12,800 hp. A 13,000-hp motor would be selected to give adequate margin for relief valve setting.

Although this basically manual selection approach at first seems tedious, the responsible engineer will quickly become proficient. Most important, there is no substitute for going the nonautomated, noncomputerized route when it comes to acquiring a thorough knowledge of the numerous interrelating factors that lead to intelligent equipment selection.

PART II

DYNAMIC COMPRESSOR TECHNOLOGY

Dynamic compressors are based on the principle of imparting velocity to a gas stream and then converting this velocity energy into pressure energy. These compressors are frequently called turbocompressors, and centrifugal machines comprise perhaps 80% or more of dynamic compressors. The remaining 20% or less are axial flow machines intended for higher-flow, lower-pressure applications, as illustrated in Fig. I.1.

CENTRIFUGAL COMPRESSOR OVERVIEW

Centrifugal compressors are relatively troublefree, dependable gas movers. Almost any gas can be compressed by these machines, and their extensive size and pressure ranges made modern process plants and efficient production of bulk chemicals possible in many instances.

Thousands of centrifugal compressors are single-stage machines, either direct-driven or geared (see Fig. II.1), and thousands are executed in multistage configuration (Fig. II.2). Both single- and multistage machines are generally made up of standardized components. There are two principal casing types: (1) horizontally split casing (Fig. II.3) and (2) vertically split casing (barrel-type compressors) (Fig. II.4). The nozzle configurations can be selected over a wide range.

To date, many machines have been built for intake volumes between 500 and 200,000 m^3/h (294 to 117,000 cfm) at discharge pressures up to 160 bar (2352 psi). Barrel-type compressors for higher pressures have been designed and are operating very successfully. Depending on the volume flow and the compression ratio, two, three, or more casings can be arranged in line even with intervening gears. Drive is usually provided directly from a steam turbine,

---

A Practical Guide to Compressor Technology, Second Edition, By Heinz P. Bloch

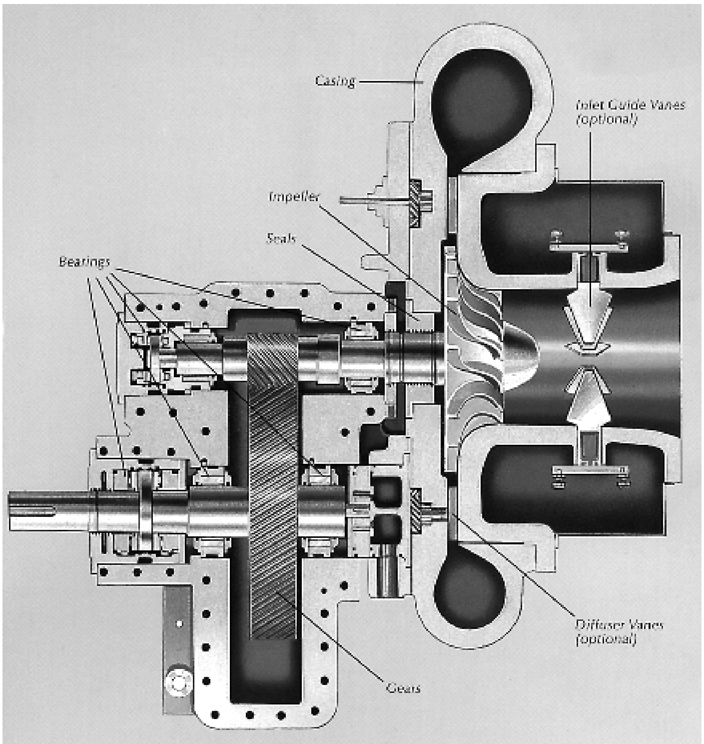

FIGURE II.1 Single-stage centrifugal compressor with integral step-up gearing. *(Dresser-Rand Company, Olean, N.Y.)*

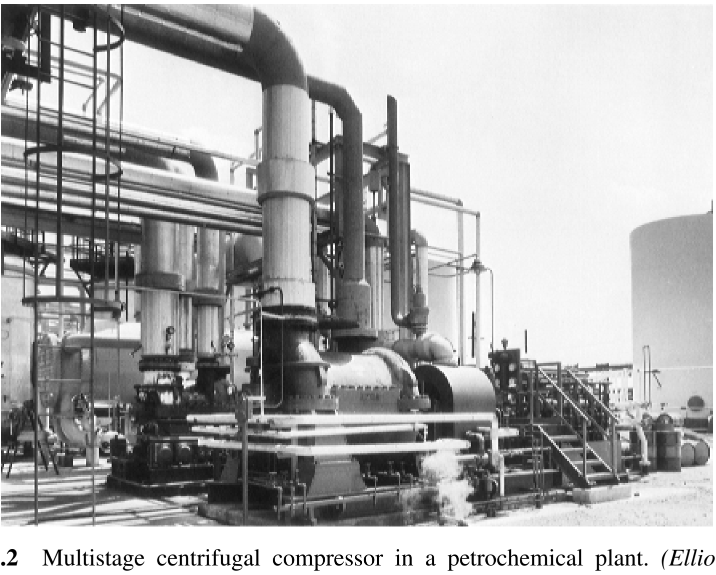

FIGURE II.2 Multistage centrifugal compressor in a petrochemical plant. *(Elliott Company, Jeannette, Pa.)*

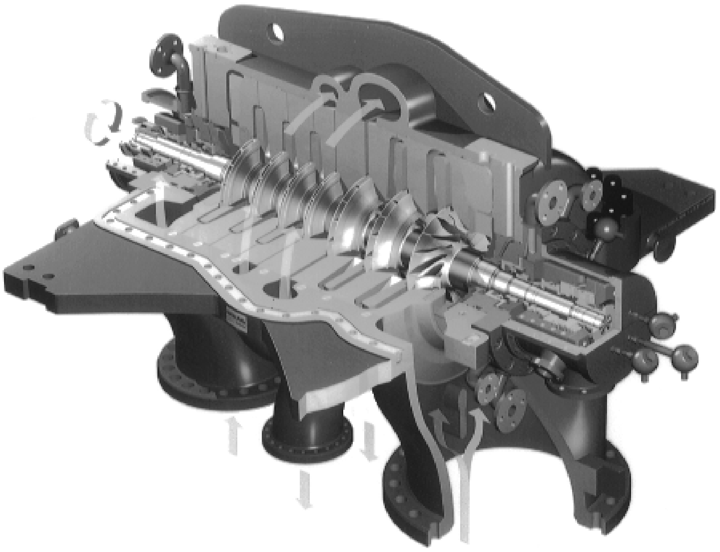

FIGURE II.3 Centrifugal compressor with horizontally split casing construction. *(Mannesmann-Demag, Duisburg, Germany)*

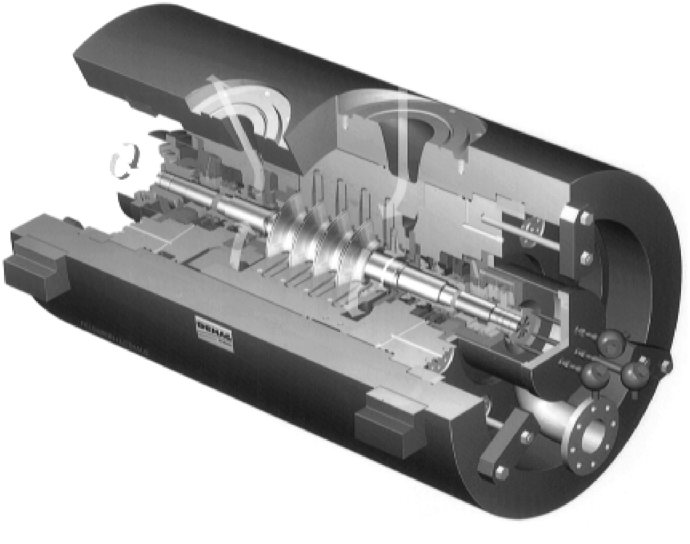

FIGURE II.4 Centrifugal compressor with vertically split (also called radially split) design. *(Mannesmann-Demag, Duisburg, Germany)* gas turbine, or expander turbine, as well as by an electric motor with gears or with variable-speed drivers.

With regard to the volume and compression ratio, and in the selection of the materials for the casing, impellers, and other components, the design is extremely flexible. As will be seen later, labyrinth seals, mechanical contact seals, floating seals, or dry gas seals can be provided for shaft sealing. Consequently, centrifugal compressors can be used for practically every gas compression requirement.

AXIAL COMPRESSOR OVERVIEW

Axial-flow compressors can handle large flow volumes in relatively small casings and with favorable power requirements. They are available in sizes producing pressures in excess of 7 bar (about 100 psi) at intake volumes between 40,000 and 1,000,000 m^3/h (23,500 and 588,500 cfm).

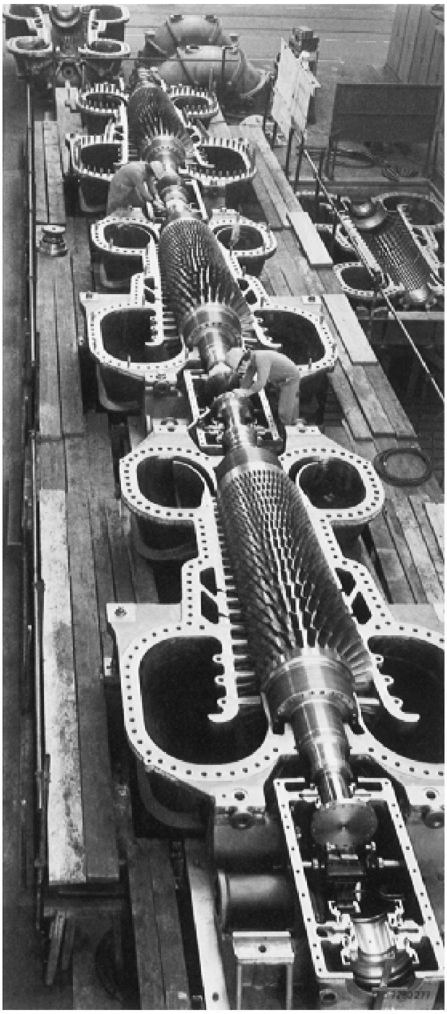

FIGURE II.5 Axial-flow compressor set for an aircraft test bed in France. These machines can be used to generate compressed air or vacuum. The installation comprises six identical axial compressors. Capacity: 244,000 N · m^3/h in compression; 38,000 N · m^3/h in vacuum mode. *(Sulzer, Ltd., Winterthur, Switzerland)*

Axial-flow compressors (Figs. II.5 and II.6) are most often used for blast furnace air and air separation services but can also be used for nitric acid plants, natural gas liquefaction, and so on. Typical performance maps for these compressors are depicted in Figs. II.7 and II.8.

Drive is provided by steam turbines or electric motors. In the case of direct electric motor drive, low speeds are unavoidable unless sophisticated variable-frequency motors are employed.

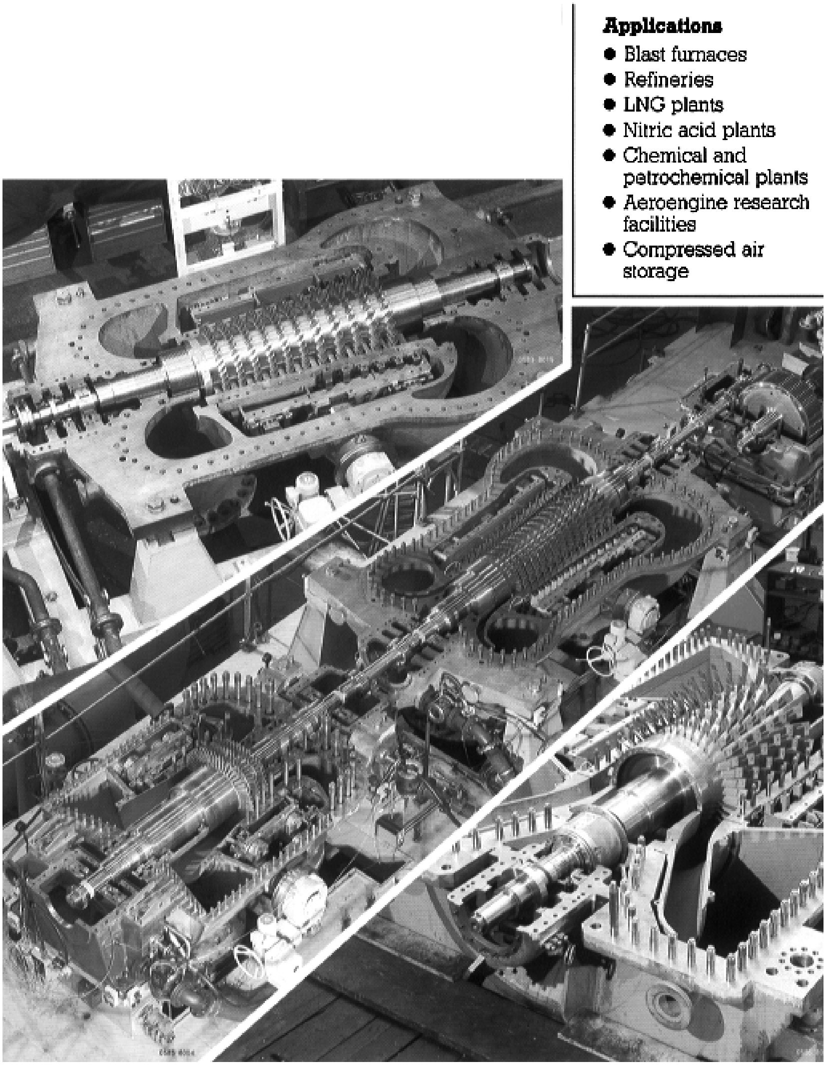

Applications
- Blast furnaces
- Refineries
- LNG plants
- Nitric acid plants
- Chemical and petrochemical plants
- Aeroengine research facilities
- Compressed air storage

FIGURE II.6 Typical axial-flow compressors. *(Sulzer, Ltd., Winterthur, Switzerland)*

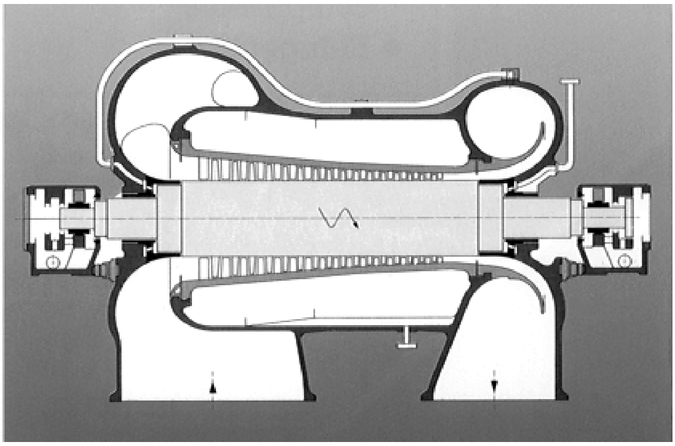

Series A with fixed stator blades (FIXAX).

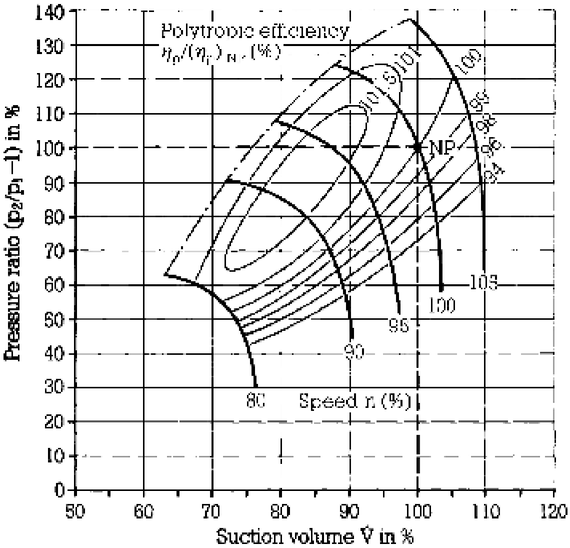

FIGURE II.7 Performance maps for axial compressors with speed variation. *(Sulzer, Ltd., Winterthur, Switzerland)*

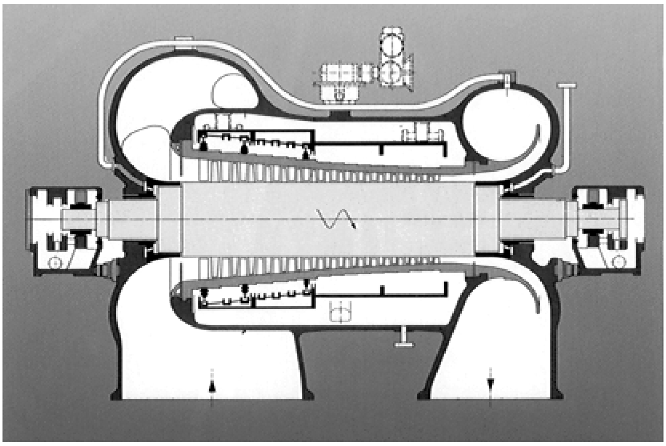

Series A with adjustable stator blades (VARAX).

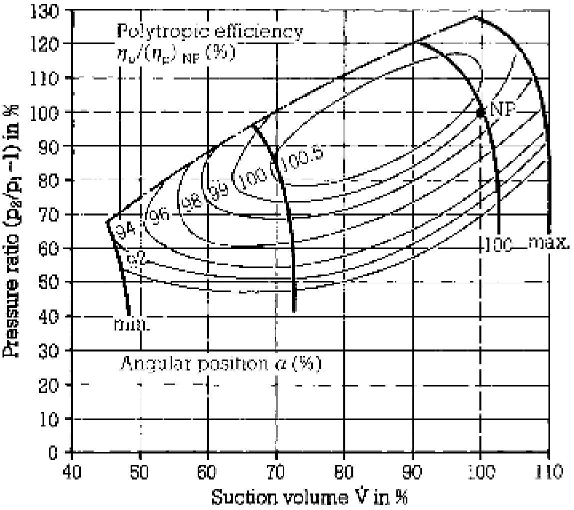

FIGURE II.8 Performance maps for axial compressors with adjustable stator blades. *(Sulzer, Ltd., Winterthur, Switzerland)*

11

SIMPLIFIED EQUATIONS FOR DETERMINING THE PERFORMANCE OF DYNAMIC COMPRESSORS*

The following data comprise the fundamental equations that are used in the determination of brake horsepower, operating speeds, and discharge temperature of centrifugal and axial gas compressors.

11.1 NONOVERLOADING CHARACTERISTICS OF CENTRIFUGAL COMPRESSORS

Impellers with backward-leaning vanes have the characteristic that at constant speed, the discharge pressure in the head decreases gradually with increasing capacity. Thus, at rated suction temperature and pressure, it is not possible to overload a properly selected prime mover since both the head and the brake horsepower will decrease appreciably as the capacity increases above 120% of the rated capacity.

11.2 STABILITY

Stability is defined in conjunction with a *surge point*. Dynamic compressors surge, or undergo a reversal of flow direction, when the gas throughput drops below a certain value that is defined uniquely by compressor geometry, operating conditions, gas properties, and other variables. This flow reversal usually takes place at or near the impeller tip; it can cause process upsets and/or serious mechanical damage to compressor internals. It is discussed further in Chapter 16.

---

* Contributed by Dresser-Rand Company, Olean, N.Y., except as noted.

A Practical Guide to Compressor Technology, Second Edition, By Heinz P. Bloch

The percent of change in capacity between the rated capacity and the surge point, at rated head, is measured as the stability of the centrifugal compressors (Fig. 11.1). This value will vary from approximately 70% for compressors developing very low pressure ratios to as low as 30% for compressors developing very high ratios. In the initial design of a compressor,

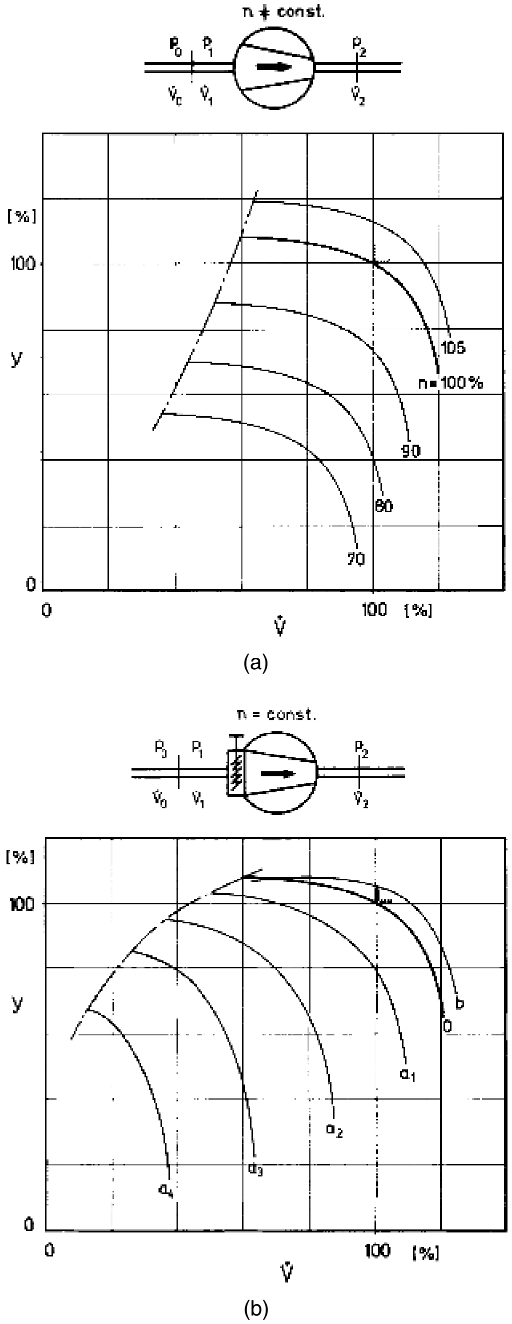

FIGURE 11.1 Performance of dynamic compressors: (*a*) variable-speed; (*b*) variable inlet guide vanes; (*c*) suction valve throttling. *(Sulzer, Ltd., Winterthur, Switzerland)*

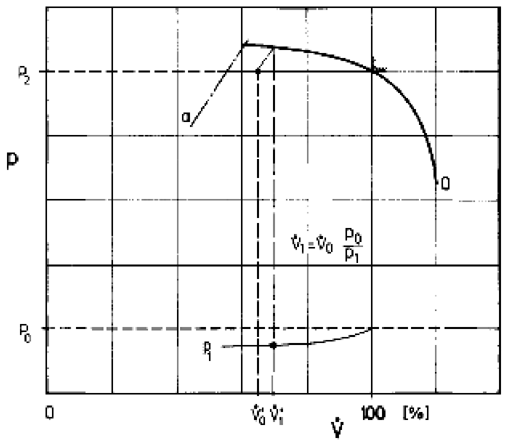

(c)

FIGURE 11.1 (*continued*)

provision can be made for high stability at slightly reduced efficiency if it is likely that partial loads will be of long duration. When the design load is sustained most of the time, the efficiency can be improved at the expense of stability.

Figure 11.1 also shows how the performance of dynamic compressors is influenced by different control methods: (1) operation at speeds ranging from 70 to 105% of original design, (2) operation at constant speed but with different guide vane settings, and (3) operation at constant speed and suction valve throttling. In each case, the vertical axis represents either head or pressure developed, while flow (in cfm or m^3/h) is represented on the horizontal axis.

11.3 SPEED CHANGE

The large difference in head with small changes in speed is illustrated by the head capacity curve (Fig. 11.1*a*). This shows that centrifugal compressor prime movers are sometimes designed for operation between 70 and 105% of the rated speed. Operation without speed change results in maintaining a head vs. flow relationship as described by the performance curve of Fig. 11.2. Note that operation to the left of the surge limit and in the choke flow or *stonewall region* is not feasible.

11.4 COMPRESSOR DRIVE

The type of prime mover that is used for centrifugal compressors will be determined in most cases by the economics of the application. There are four different classes of prime movers that are considered most suited for centrifugal compressors:

- Steam turbine
- Electric motor

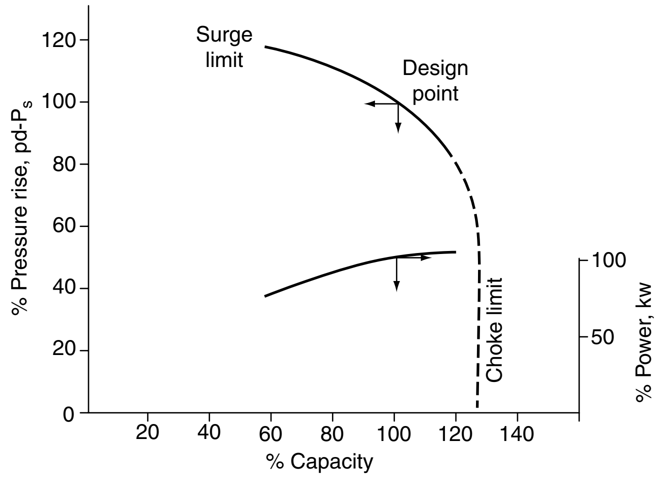

FIGURE 11.2 Head capacity curve for a centrifugal compressor. *(Dresser-Rand Company, Olean, N.Y.)*

- Expansion turbine (expander)
- Combustion gas turbine

Most centrifugal compressors have been built for drive by the four types mentioned, illustrating the flexibility with which they may be applied. Driver selection is determined primarily by the following factors:

- Water requirements (steam consumption)
- Operating speeds
- Process control
- Process steam supply
- Fuel or energy costs
- Reliability

Adjustable inlet guide vanes or suction throttling are available for constant-speed motor drive. The electric motor may also be used for variable-speed operation by the use of hydraulic couplings or other means.

11.5 CALCULATIONS

The three items usually to be determined in centrifugal compressor calculations are:

- Shaft horsepower
- Operating speed
- Discharge temperature

Determination of horsepower and speed is predicated on the calculation of the head required for the compression. Head, which actually represents the work being done per pound of fluid being handled, is expressed in terms of ft-lb/lb or N · m/kg, just as for a liquid pump, and is fundamentally defined by the following:

$$H = k_1 \int V\,dP \tag{11.1}$$

where H = head, ft (m)
V = specific volume, ft^3/lb (m^3/kg)
P = pressure, psia (bar, absolute)
k_1 = different constants, for English or metric conversions and expressions

For a liquid pump, where the specific volume or density is constant, Eq. (11.1) is readily integrated to

$$H = k_1 V(P_2 - P_1) = \frac{k_1(P_2 - P_1)}{\rho} \tag{11.2}$$

where ρ is the density in lb/ft^3 or kg/m^3.

For a centrifugal compressor, where the specific volume is a variable, a somewhat more complex relation is obtained. If it is assumed that the compression is polytropic and may be represented by the equation

$$PV^n = \text{constant}$$

Eq. (11.1) may be integrated and rearranged to the familiar form

$$H = \frac{k_1 P_1 V_1}{(n-1)/n}\left[\left(\frac{P_2}{P_1}\right)^{(n-1)/n} - 1\right] \tag{11.3}$$

where n is the polytropic exponent of compression.

Equation (11.3) may alternatively be expressed in the form

$$H = \frac{ZRT_1}{(n-1)/n}\left[\left(\frac{P_2}{P_1}\right)^{(n-1)/n} - 1\right] \tag{11.4}$$

where R = gas constant = 1545/MW or 8314/MW
T_1 = suction temperature, °R or K
Z = average compressibility

For ease in calculation, Eqs. (11.3) and (11.4) may be expressed in the form

$$H = k_1 P_1 V_1 \beta = ZRT_1 \beta \tag{11.5}$$

where $\beta = [(P_2/P_1)^M - 1]/M$
$M = (n - 1)/n$

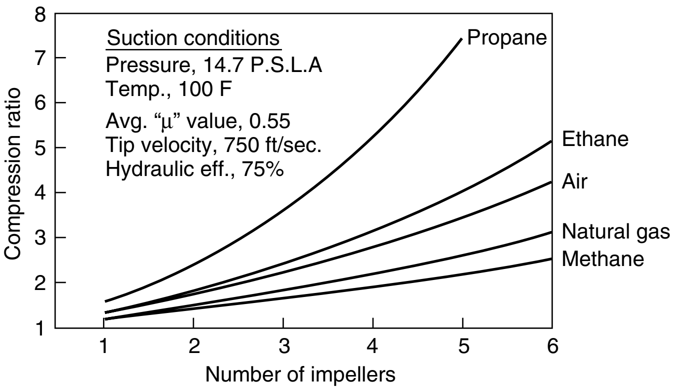

FIGURE 11.3 Compression ratio vs. number of impellers. *(Dresser-Rand Company, Olean, N.Y.)*

From Eqs. (11.4) and (11.5), it is therefore apparent that the head, and hence the horsepower, for a given compression vary directly with the absolute suction temperature and inversely with the molecular weight of the gas being handled. Since there is a limit to the amount of head that a single impeller will develop, as will subsequently be demonstrated, it follows that gases having a high molecular weight will require fewer impellers (i.e., stages) than will gases having a low molecular weight when being compressed through the same ratio. This is indicated in Fig. 11.3 for several common gases.

For perfect gas compression, the compressibility factor is unity. For real gas compression, this factor deviates from unity. In those instances where the amount of this deviation is not large (i.e., where the average compressibility factor varies between 0.95 and 1.02 or where it remains fairly constant over the range of compression), an average value of the compressibility factor may be used in Eq. (11.4) with negligible error. In other instances, where the compressibility factor is subject to larger variation over the range of compression, the head may be approximated from the following relation:

$$H = k_2[(P_1V_1) + (P_2V_2)]\log_{10}\frac{P_2}{P_1} \tag{11.6}$$

where k_2 represents different constants in the English and metric systems of measurement.

Equation (11.6) is not strictly correct. It is based on the assumption that the log mean value of PV equals the arithmetic mean. This will result in an error of 1.2% for high compression ratios and is based only on the assumption that the compression is polytropic and can be represented by a single exponent (n).

To be correct, the following formula should be used:

$$H = k_1 \log_{10}\frac{P_2}{P_1}\frac{P_2V_2 - P_1V_1}{\log_{10}(P_2V_2/P_1V_1)} \tag{11.7}$$

Equation (11.6) is of particular utility for hydrocarbon gases at moderate or high pressures and/or low temperatures.

It is to be noted that successful use of Eqs. (11.3) and (11.4) is dependent on the determination of the polytropic exponent. This may be readily obtained from the following equations, which follow from the definition of hydraulic efficiency:

$$\eta = -\frac{\int V\,dP}{\Delta h} = \frac{\dfrac{P_1V_1}{(n-1)/n}\left[\left(\dfrac{P_2}{P_1}\right)^{(n-1)/n} - 1\right]}{\dfrac{P_1V_1}{(K-1)/K}\left[\left(\dfrac{P_2}{P_1}\right)^{(n-1)/n} - 1\right]} \tag{11.8}$$

$$\eta = \frac{(K-1)/K}{(n-1)/n} \tag{11.9}$$

where η = hydraulic efficiency
Δh = change in enthalpy, Btu/lb or kJ/kg
K = isentropic exponent (c_p/c_v)

The hydraulic efficiency is established by tests and is generally a function of the capacity at suction conditions to the compressor.

The head that a centrifugal compressor stage consisting of an impeller and diffuser will develop may be related to the peripheral velocity by the following:

$$H = \mu \frac{u^2}{g} \tag{11.10}$$

where μ = pressure coefficient
u = peripheral velocity, ft/s or m/s
g = gravitational constant, 32.2 ft/s^2 or 9.81 m/s^2

The value of the pressure coefficient referred to previously is a characteristic of the stage design. An average value for one stage of a multistage centrifugal compressor is 0.55. If a peripheral velocity of 770 ft/s (235 m/s) is assumed, it can be seen that the head per stage is approximately 10,000 ft (3050 m). This permits ready approximation of the number of stages required to develop the head corresponding to the particular compression process.

The power required for the compression of a gas may be calculated from the following:

$$\text{ghp} = \frac{W\Delta h}{33{,}000} \tag{11.11}$$

or

$$\text{kW} = \frac{mH}{3600}$$

where ghp = gas horsepower
W = gas flow, lb/min
kW = gas power, kW
m = mass flow, kg/h
H = differential head, m

From Eq. (11.8), however,

$$\Delta h = \frac{\int V\,dP}{\eta} = \frac{H}{\eta} \tag{11.12}$$

Therefore,

$$\text{ghp} = \frac{WH}{33{,}000\eta}$$

and

$$\text{kW} = \frac{mH_p}{3600\eta}$$

The compressor shaft horsepower is, of course, equal to the gas horsepower divided by the mechanical efficiency. For most centrifugal compressor applications, the mechanical losses are relatively small, and an average mechanical efficiency of 99% may be used for estimating purposes.

The rotative speed of a centrifugal compressor is fixed by the peripheral velocity of the impellers and their diameter. As indicated previously, the peripheral velocity is determined by the head to be developed; the impeller diameter is determined by the capacity to be handled, as measured at suction conditions.

From Eq. (11.10):

$$u = \sqrt{\frac{Hg}{\mu}} \qquad \text{also} \qquad u = \frac{\pi DN}{720} \qquad \text{ft/s}$$

where H = head per stage, ft
N = rotative speed, r/min
D = impeller diameter, in.
$u = \pi DN/60$ m/s, where D and H are expressed in meters

$$N = \frac{720u}{\pi D} = \frac{720\sqrt{H_g/\mu}}{\pi D} \tag{11.13}$$

$$N = \frac{1300}{D}\sqrt{\frac{H}{\mu}} \qquad \text{rpm}$$

where D and H = in. and ft, respectively, and

$$N = 59.82/D\sqrt{\frac{H}{\mu}} \qquad \text{rpm}$$

where D and H are expressed in meters. As previously indicated, for approximate calculations an average pressure coefficient of 0.55 may be assumed.

The discharge temperature for an uncooled compression process may be calculated from the fundamental relation

$$T_2 = T_1\left(\frac{P_2}{P_1}\right)^M \tag{11.14}$$

For those applications where the discharge temperatures for an uncooled compression process would be prohibitive, internal diaphragm cooling or external interstage cooling may be used. If internal diaphragm cooling is used, the average exponent of compression is approximated by the isentropic exponent, and the head may be estimated on the basis of this. With external interstage cooling, each stage, or compressor body, is dealt with separately.

12

DESIGN CONSIDERATIONS AND MANUFACTURING TECHNIQUES

12.1 AXIALLY VS. RADIALLY SPLIT

Figures II.3 and II.4 illustrated the axial and radial options that are available for many centrifugal process gas compressors. The decision as to whether an axially or radially split casing should be used depends on a number of factors that are highlighted next.

12.2 TIGHTNESS

The radially split design has circular casing joints or flanges with a perfectly even load distribution (Figs. 12.1 and 12.2). The leakage of gas at the two covers can thus be prevented most effectively. Besides metal-to-metal contact, “endless” O-rings are inserted in grooves on the two covers. By monitoring the pressure between two adjacent rings, the tightness can be controlled. For toxic, flammable, and explosive gases the barrel design is therefore always of advantage. For this reason, the latest issue of the API Standard 617 specifies the radially split casing construction for gases containing hydrogen if the hydrogen partial pressure exceeds 13.8 bar (200 psig).

12.3 MATERIAL STRESS

The cylindrical design with the smallest possible inner diameter is obviously the most suitable construction. With axially split casings the space available for bolting is further restricted at the two shaft penetrations. To achieve the tightness required, high contact pressure at the joints is required. The necessary forces in the bolts are often higher than would

---

A Practical Guide to Compressor Technology, Second Edition, By Heinz P. Bloch

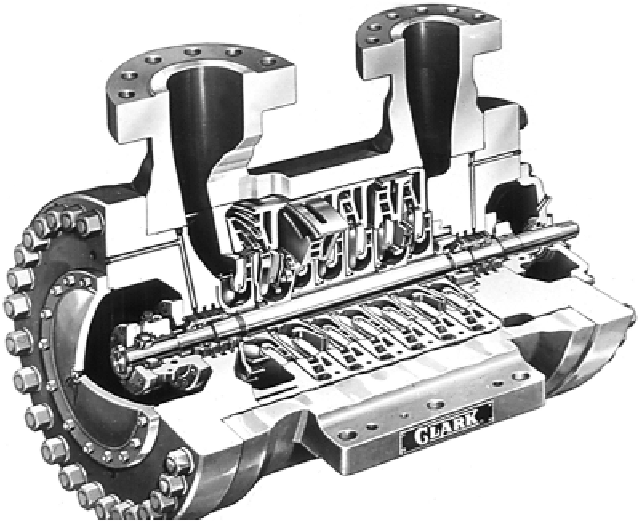

FIGURE 12.1 Radially split compressor with bolted-on heads, suitable for low-pressure service. *(Dresser-Rand Company, Olean, N.Y.)*

FIGURE 12.2 Radially split compressor with a shear-ring head closure. *(Dresser-Rand Company, Olean, N.Y.)*

be required by the static gas forces if the casing flanges were perfectly rigid and flat. For large compressor frame sizes the radially split design can therefore be the only possible solution, even at moderate pressures.

12.4 NOZZLE LOCATION AND MAINTENANCE

For operating pressures where an axially split design would be perfectly adequate, barrel compressors are sometimes preferred since the nozzles can be arranged in any radial direction. If the necessary space in the axial direction at the nondriven shaft end is available for the horizontal pullout of the inner casing cartridge, inspections, rotor changes, or complete cartridge replacements can be accomplished quickly without removing any process piping to and from the compressor. For tandem units, on the other hand, the first or low-pressure casing should be of the axially split design up to the highest possible operating pressure. A barrel compressor coupled at both shaft ends has to be removed for overhaul or replacement of the rotor.

Seals and bearings in state-of-the-art barrel compressors can, however, always be serviced and replaced with the barrel casing remaining in place. Finally, it should be noted that only at moderate pressures can a ring of sturdy bolts successfully attach the end walls to the outer casing (Fig. 12.1). As pressure increases, however, it becomes mechanically impractical to provide a sufficient number of bolts of sufficiently large diameter to contain the pressure. This is when shear-ring enclosures (Figs. 12.2 and 12.6) are the preferred solution.

Compressor manufacturers are often able to give graphical guidelines or plots that allow a purchaser to zero in on probable casing recommendations. This is done in Fig. 12.3 (compare Fig. 12.74), where the potential client can determine which Elliott compressor frame should be selected to compress 33,000 inlet cfm (56,200 inlet m^3/h) of process gas to a gauge pressure of 450 psi (31 bar).

Plots of pressure and flow determine that the horizontally split 46 M frame, with a capacity of 22,000 to 34,000 inlet cfm (37,000 to 58,000 m^3/h), will serve. If a hydrogen-rich gas of very low molar mass is involved, a vertically split 46 MB (barrel-type) frame would be selected.

A vertical line drawn to the speed plot establishes that compressor speed can range approximately from 4600 to 6000 rpm. Since we are approaching the maximum flow capacity of this particular compressor frame, it would be best to operate in the upper half of the speed limit.

12.5 DESIGN OVERVIEW*

12.5.1 Casings

Horizontally split centrifugal compressors consist of upper and lower casing halves that are fastened together by stud bolts through mating flanges at the horizontal centerline. Where moderate pressures are encountered, this type of construction may offer advantages in maintainability. Access to the internals of the compressor is gained by a single vertical lift of the upper casing half. Figure 12.4 illustrates this design. Access to the radial bearings, thrust bearings, and seal for inspection or maintenance does not require removal of the upper casing half.

As depicted in Fig. 12.5, vertically split compressors consist of a case that is formed in the shape of a cylinder and open at either end. End closures or heads are attached at either end. Access to the internals of the compressor is gained by removing the outboard head.

Refer to Fig. 12.6 for a typical cross section of a centrifugal compressor, showing the major features that will be discussed, including the thrust and radial bearings, the seals, the rotor and impellers, and the various gas flow path configurations available.

---

* Sections 12.5 through 12.12 were developed and contributed by Harvey Galloway and Arthur Wemmell, Dresser-Rand Company, Olean, N.Y.

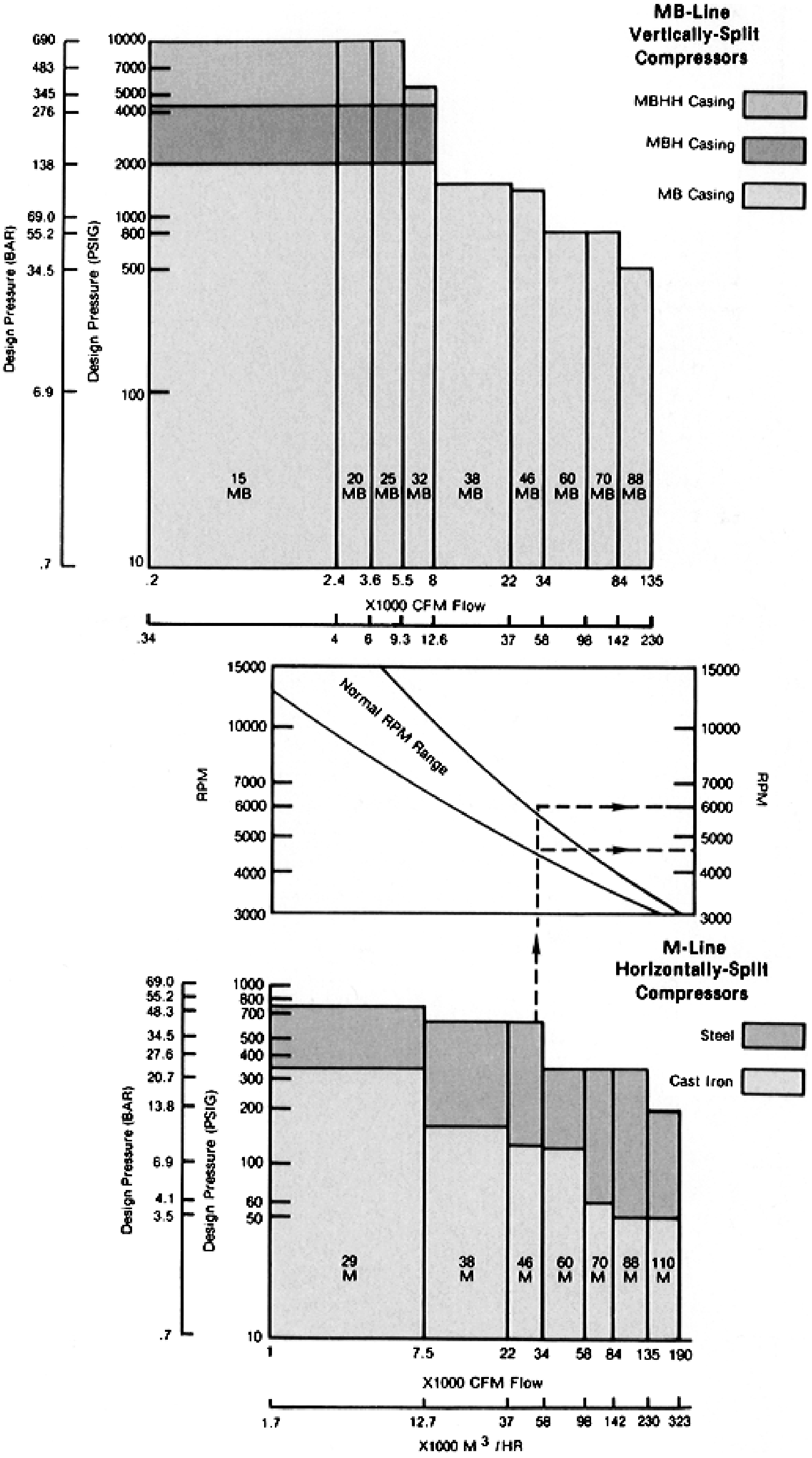

FIGURE 12.3 Typical centrifugal compressor selection chart. *(Elliott Company, Jeannette, Pa.)*

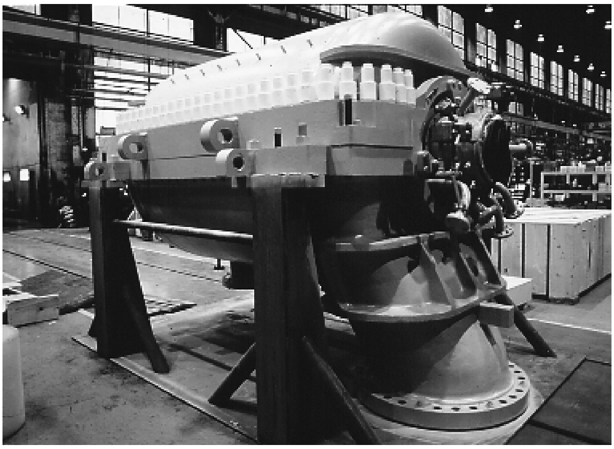

FIGURE 12.4 Horizontally split centrifugal compressor. *(Dresser-Rand Company, Olean, N.Y.)*

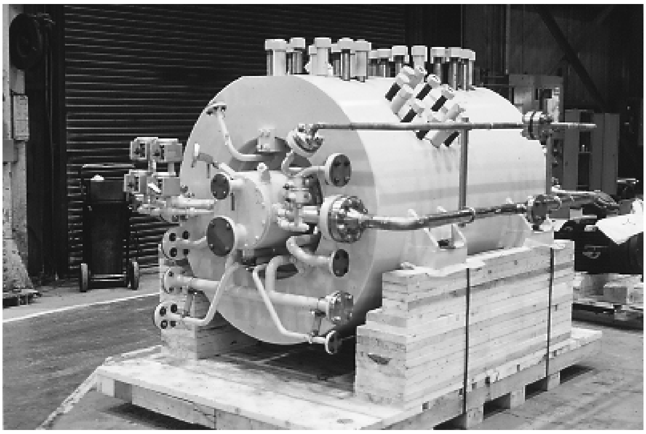

FIGURE 12.5 Vertically split centrifugal compressor. *(Dresser-Rand Company, Olean, N.Y.)*

Although our emphasis is on high-pressure multistage centrifugals, we do want to acknowledge the use of axial compressors in the petrochemical, refinery, and chemical industries. Accordingly, Fig. 12.7 depicts the combination of an axial-flow compressor at the initial gas intake with a radially bladed compressor section prior to gas discharge.

The multitude of compressor applications has resulted in a variety of case and nozzle configurations. The more common case and nozzle configurations are illustrated in Fig. 12.8.

Looking first at the flow path in Fig. 12.9, this compressor has a *straight-through flow path*, meaning that the gas enters through the main inlet of the compressor, passes through the guide vanes into the impeller, is discharged from the impeller into the diffuser through the return bend and into the next impeller, and so on until the total flow is discharged through the nozzle at the other end of the compressor.

Flexibility of nozzle orientation on a straight-through compressor allows various positions of the suction and discharge flanges. The most common orientation is both nozzles

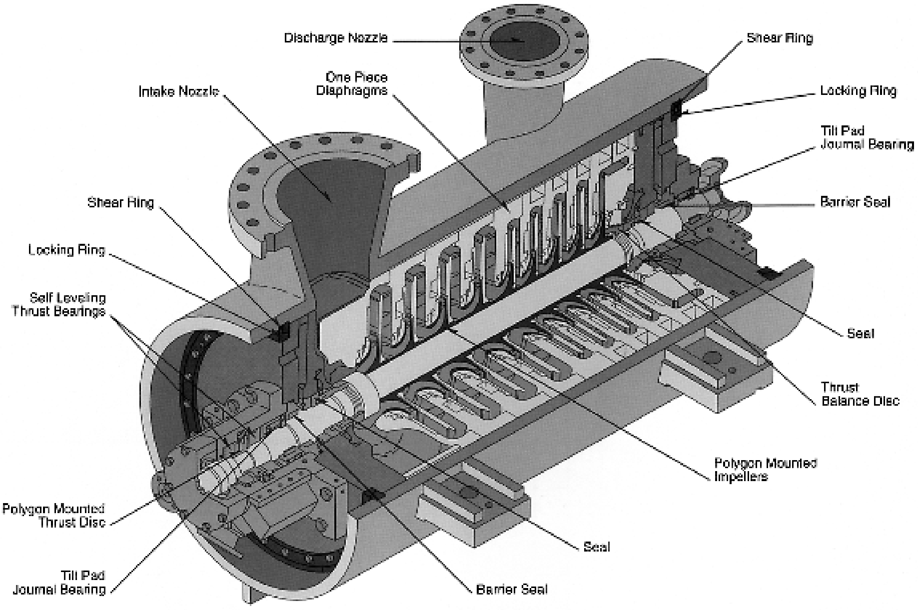

FIGURE 12.6 Major components of multistage centrifugal compressors. *(Dresser-Rand Company, Olean, N.Y.)*

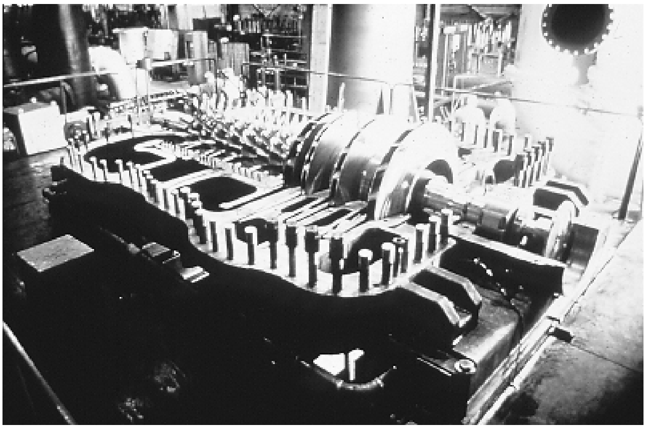

FIGURE 12.7 Combination axial/radial-flow compressor. *(Dresser-Rand Company, Olean, N.Y.)*

pointed up or down, but in some applications, such as gas recirculators and boosters, the nozzles are located on the side (Fig. 12.10).

Reviewing the cross section of a *compound compressor* (Fig. 12.11), it can be seen that the flow path is the same as that of two straight-through compressors in series. That is, the total flow enters at the main inlet of the compressor and is totally discharged at the first discharge connection, is cooled or otherwise reconditioned, reenters the compressor at the second inlet connection, and is totally discharged at the final discharge nozzle.

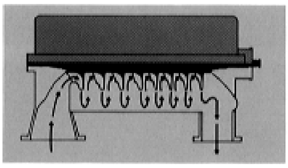

Straight-Through Flow

A convenient arrangement. May employ as many as 12 stages. Most often used for low-pressure process gas compression.

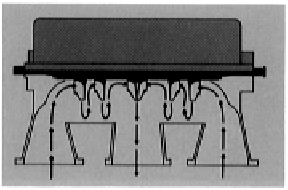

Double-Flow

Doubles the possible maximum flow capability of the compressor. Since the number of impellers handling each inlet flow is only half that of an equivalent straight-through machine, the maximum head capability is necessarily reduced.

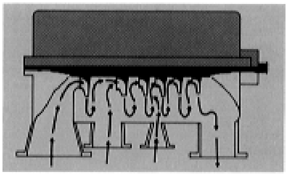

Side Streams

Side stream nozzles permit introducing or extracting gas at selected pressure levels. These flows may be process gas streams or flows from economizers in refrigeration compression. Side "loads" may be introduced through the diafram between two stages or, if flow is high, into the area provided by omitting one or two impellers.

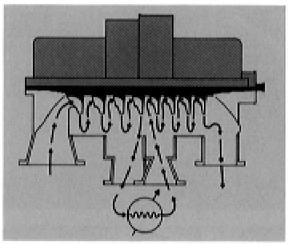

Iso-Cooling (cooling between stages)

When gas temperatures within the compressor reach 200 to 400°F (90 to 200°C), efficiency is improved and compressor power reduced by cooling the gas. Iso-Cooling nozzles permit the hot gas to be taken from the compressor to an external heat exchanger, then returned to the following stage at reduced temperature for further compression.

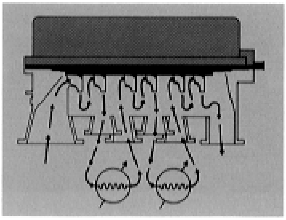

Double Iso-Cooling

High molecular mass gases such as chlorine (mass 70.91) heat much more rapidly during compression than do low molar mass gases. In such service, in order to maintain compression efficiency (and to avoid deposits within the compressor due to polymerization), it may be necessary to remove the hot gas from two points within the compressor, passing the gas stream through two intercoolers.

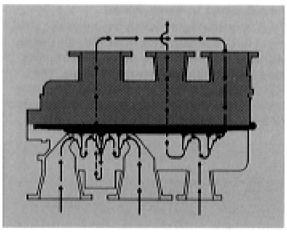

First Section Double-Flow

Capacity of this compressor is significantly increased by arranging double-flow compression in the first section. This is only feasible where head requirements are moderate to low, as in applications with low-pressure rise and/or high molar mass (propane or propylene refrigeration, for example).

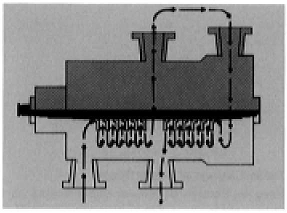

Back-to-Back

Minimizes thrust when a high-pressure rise is to be achieved within one casing. Note how the thrust forces acting across the two "banks" of impellers tend to neutralize one another. A high-pressure, barrel-type casing.

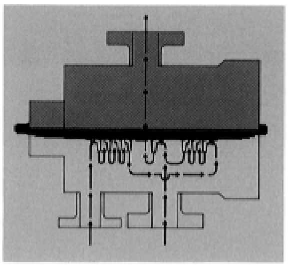

Back-to-Back plus Recirculation Feature

This unit is typical for combined feed gas and circulator service. Last stage flow is combined with recycle flow. Mixing of flows can be either internal or external by means of an added discharge nozzle. Crossover flow is internal through passages in the inner casing.

FIGURE 12.8 Compressor casing and nozzle configuration. *(Elliott Company, Jeannette, Pa.)*

In applications with high-compression ratios, intercooling is desirable to minimize gas temperature and power requirements as well as to meet other process requirements. In many applications, compounding can reduce the number of compressor casings required. Figure 12.12 depicts a string, or train, of casings. Gas discharged from the first casing is led to suitable external heat exchangers before reentering into either the following compressor section or the next casing.

For high pressure ratios, arranging the impellers in a back-to-back configuration results in two inlet and two discharge nozzles (Fig. 12.13). This arrangement balances the axial forces on the rotor and eliminates the requirement for a balance piston, thereby reducing

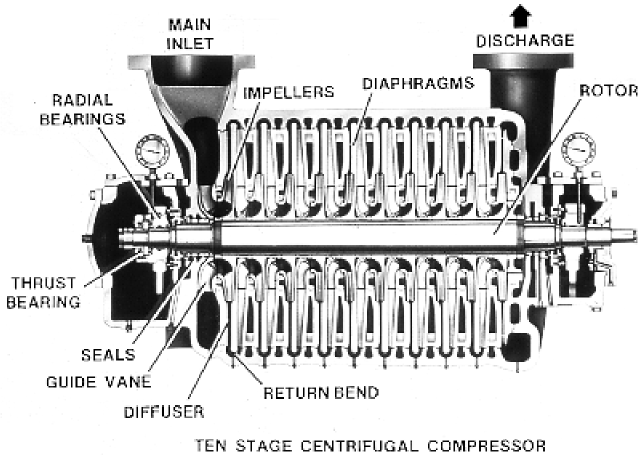

FIGURE 12.9 Straight-through compressor casing. *(Dresser-Rand Company, Olean, N.Y.)*

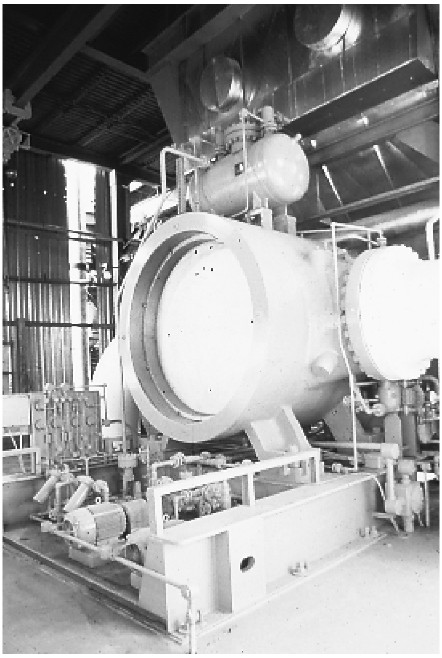

FIGURE 12.10 Side-oriented nozzles on booster compressor. *(Dresser-Rand Company, Olean, N.Y.)*

shaft horsepower. Here, the gas flow enters the casing (case) at one end and leaves the case near the middle. The gas is redirected after externally cooling, if desired, in a second section at the opposite end of the case and finally leaves the casing in the center at the required discharge pressure.

Two high-pressure compressors operating in series are shown in Fig. 12.14 while undergoing a load-full pressure test. These units both utilize a back-to-back configuration with an integral crossover.

In the cross-sectional view of Fig. 12.15, examples of both incoming and outgoing sidestreams are shown. Flow enters the main inlet and is compressed through one impeller to

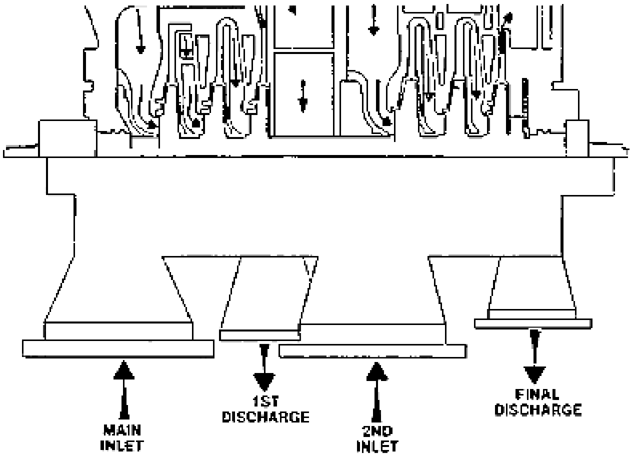

FIGURE 12.11 Cross-sectional view of a compound compressor. *(Dresser-Rand Company, Olean, N.Y.)*

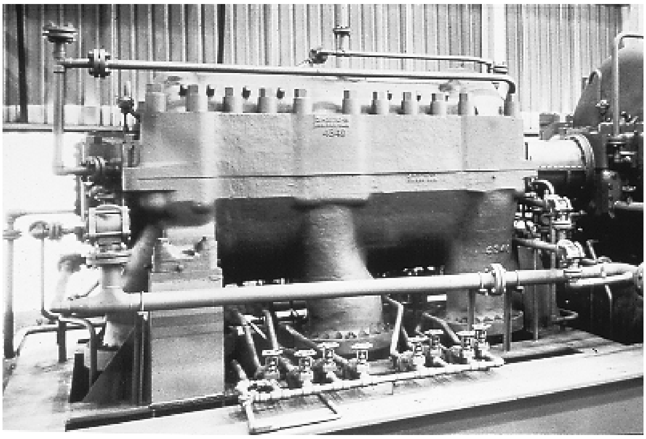

FIGURE 12.12 Compressor string, or casing train. *(Dresser-Rand Company, Olean, N.Y.)*

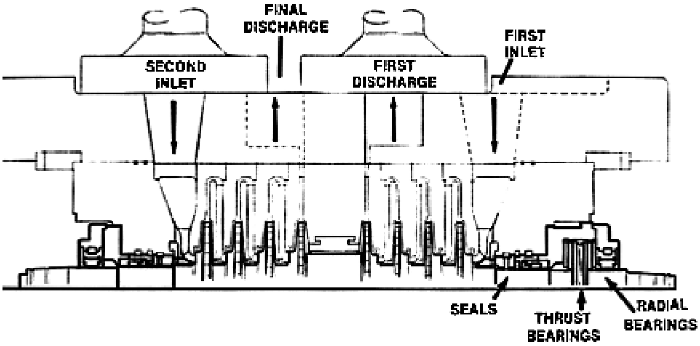

FIGURE 12.13 Back-to-back impeller orientation. *(Dresser-Rand Company, Olean, N.Y.)*

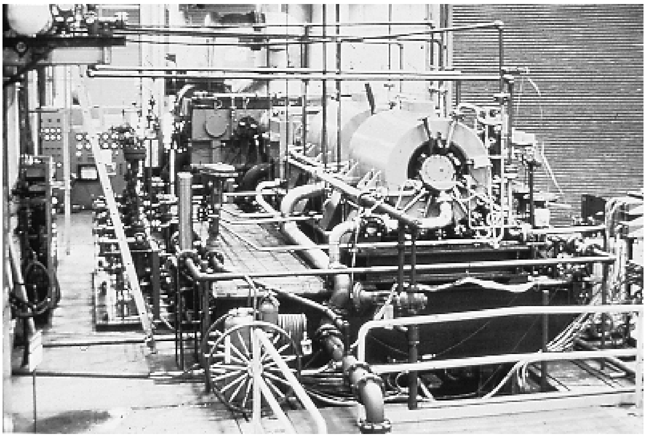

FIGURE 12.14 High-pressure compressor in a series flow arrangement. *(Dresser-Rand Company, Olean, N.Y.)*

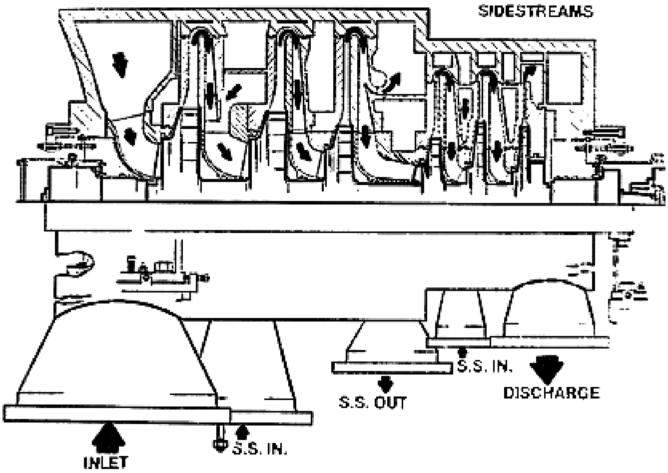

FIGURE 12.15 Cross-sectional view of a sidestream compressor. *(Dresser-Rand Company, Olean, N.Y.)*

an intermediate pressure level, at which point an incoming sidestream flow is mixed with the main inlet flow in the diaphragm area ahead of the next impeller. The total mixed flow is compressed to a higher pressure level through two impellers; a small portion of the flow leaves the compressor through an outgoing sidestream to satisfy a process requirement. The remainder of the flow is compressed through one impeller, mixed with an incoming sidestream, compressed through two stages, and exits through the final discharge.

For refrigeration cycles and other process requirements, the capability to admit or discharge gas at intermediate pressure levels is required. Compressors provide sidestreams with minimum flow disturbance and provide effective mixing of the main and sidestream gas flows (Fig. 12.16).

In the double-flow configuration of Figs. 12.17 and 12.18, the compressor is divided into two sections. It is effectively operating as two parallel compressors. An inlet nozzle is

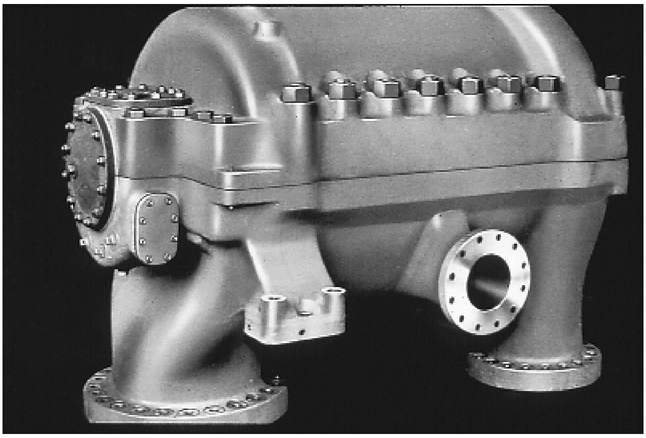

FIGURE 12.16 Sidestream compressor. *(Dresser-Rand Company, Olean, N.Y.)*

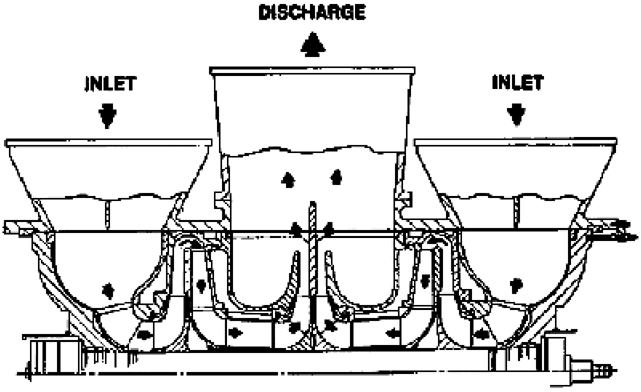

FIGURE 12.17 Cross-sectional view of a double-flow compressor. *(Dresser-Rand Company, Olean, N.Y.)*

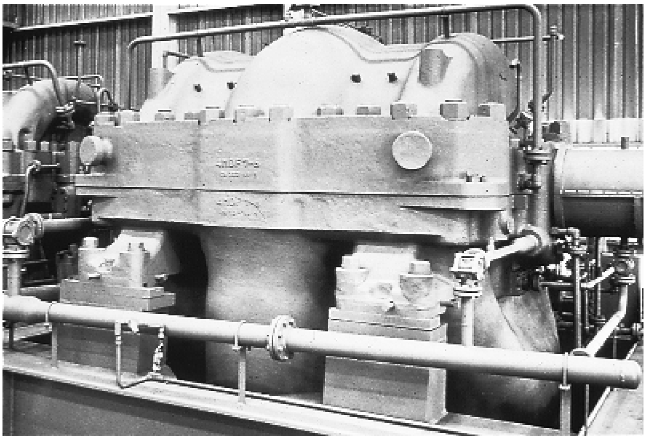

FIGURE 12.18 Double-flow compressor installation. *(Dresser-Rand Company, Olean, N.Y.)*

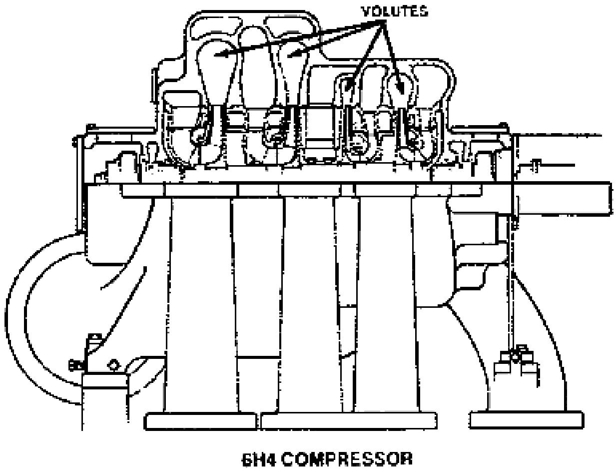

FIGURE 12.19 Cross-sectional view of an over-the-impeller volute-type diffuser. *(Dresser-Rand Company, Olean, N.Y.)*

located at either end of the compressor case. The discharge flow from each section is extracted from a common discharge nozzle at the center of the case. The impellers of one section face in the opposite direction from the impellers in the other section, achieving thrust balance over all operating conditions.

This concept effectively doubles the capacity of a given frame size and has several advantages:

- *Smaller frame.* For a given capacity, a compressor one frame smaller than the single-flow configuration can be used, thus reducing compressor costs.
- *Speed match.* In many applications, the flow from the double-flow compressor is discharged to a single-flow compressor of the same frame size. This permits operations at the same speed and allows the use of a single driver or duplication of drivers.

In yet other applications, it is desirable to cool after each stage of compression. The case provides eight nozzle connections, allowing intercooling after each impeller. Note that this particular type of design (Figs. 12.19 and 12.20) allows the use of over-the-impeller volute-type diffusers since the stage spacing required for the nozzle allows sufficient room for the volute area required. A typical application utilizing this case and nozzle arrangement is that of oxygen compression in an air separation plant.

In addition to the multistage centrifugal compressors discussed, single- and multistage overhung impeller designs are available for low-pressure-ratio applications. Several of these beam-type configurations are shown in Figs. 12.21 through 12.24. Allowable casing pressures have been extended up to 2000 psi for this type of casing. Design consideration must be given to startup when the casing is pressurized, because of high axial forces on the impeller.

Note the vertically split construction and the location of the inlet nozzle, which allows direct inlet flow into the impeller. These units are referred to as *direct inlet* or *axial inlet centrifugal compressors*. The fact that the inlet gas enters the impeller without requiring a 90° turn results in lower aerodynamic inlet losses (Fig. 12.23).

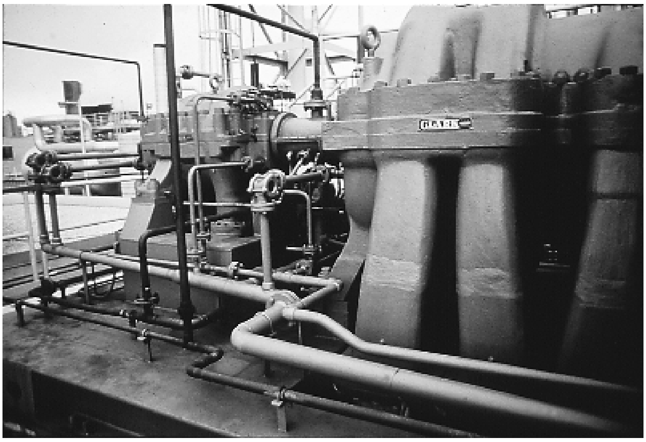

FIGURE 12.20 Compressor with intercooling after each section. *(Dresser-Rand Company, Olean, N.Y.)*

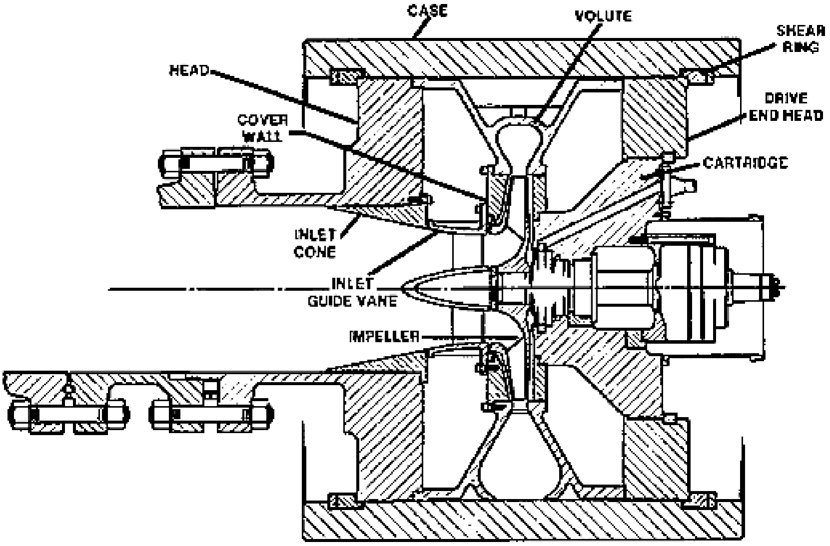

FIGURE 12.21 Cross-sectional view of a single-stage overhung impeller type of compressor. *(Dresser-Rand Company, Olean, N.Y.)*

The most common method of head retention for both vertically and horizontally split cases is by use of stud bolts. The previous use of stud bolts on vertically split casings has been superseded by the use of segmented shear rings.

On horizontally split casings (Fig. II.3) a large number of studs are secured in the lower case flange. The upper case flange has been drilled to receive the studs, and nuts are fastened on the studs when the upper case is properly positioned.

In earlier designs, vertically split casings of either between-bearing or overhung design were similarly fitted with studs that pass through the heads, and the heads are secured by stud

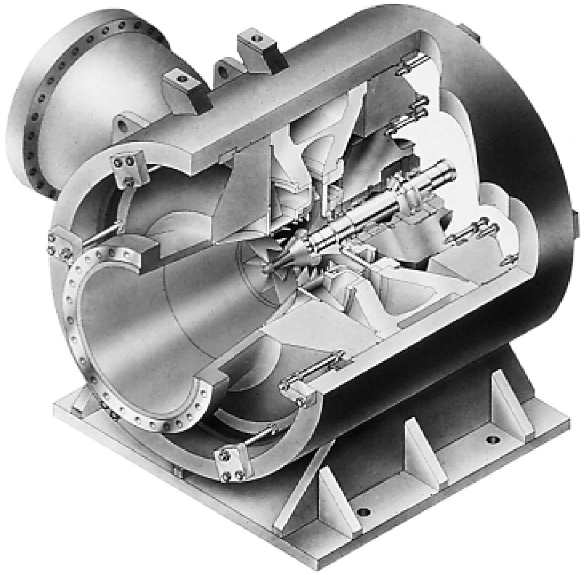

FIGURE 12.22 Single-stage overhung compressor for pipeline service. *(Dresser-Rand Company, Olean, N.Y.)*

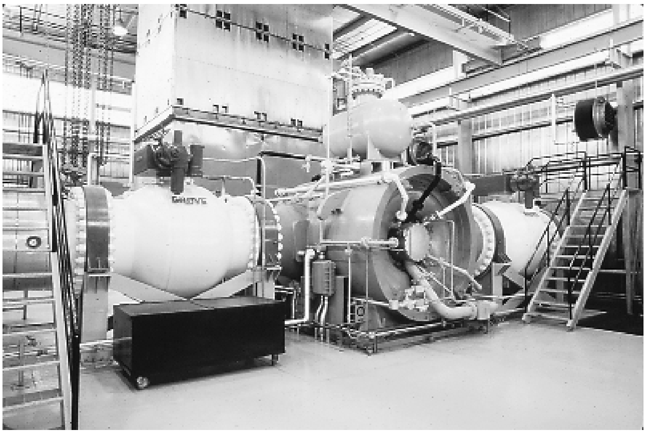

FIGURE 12.23 Single-stage overhung compressor installation for pipeline service showing side nozzles. *(Dresser-Rand Company, Olean, N.Y.)*

nuts (Fig. 12.1). In contrast, the current use of segmented shear-ring head retention designs for between-bearing as well as overhung design vertically split centrifugal compressors offers the benefits of greater strength and faster disassembly. Proper assembly is assured by elimination of precise torque requirements of bolted heads. In shear-ring designs, the head or end closures are retained by segmented shear-ring members positioned in an annular machined groove in the case. The incorporation of an O-ring assures positive sealing.

On large-capacity vertically split compressors (Fig. 12.24), the shear-ring head retainer eliminates the need to handle large stud nuts. A small secondary spacer ring assembly allows

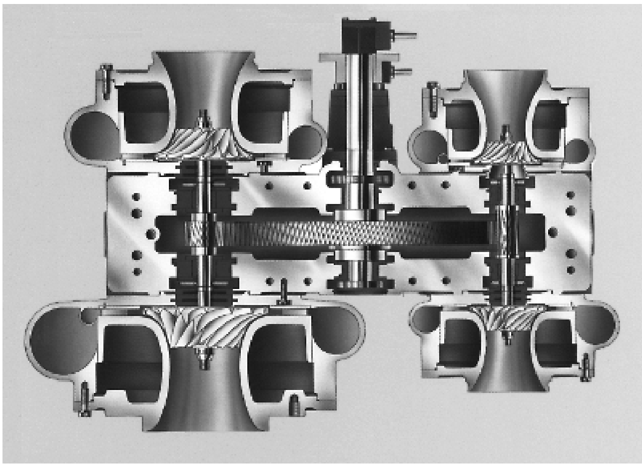

FIGURE 12.24 Multistage overhung impeller compressor. *(Mannesmann-Demag, Duisburg, Germany)*

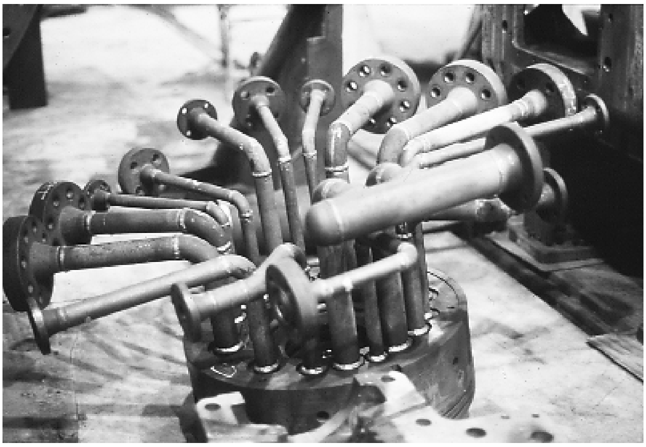

FIGURE 12.25 Piping connections entering a compressor head. *(Dresser-Rand Company, Olean, N.Y.)*

removal and installation of the primary shear ring. As illustrated in Figs. 12.2 and 12.6, the most advantageous use of shear-ring head retention is with very high pressure casings. It is difficult to properly design bolted heads for casings with pressure ratings over 5000 psi because of the physical size of the studs required.

Moving to Fig. 12.25, we note how surprisingly many external connections are required to enter the case through the heads. As shown in the photograph, virtually all available space is used in a small high-pressure head by the various external support systems such as lube and seal oil supply and drains, vents, and reference pressure lines.

As discussed later, compressor casing materials consist of cast iron or cast steel, fabricated steel, or forged steel. Horizontally split centrifugals commonly are produced from castings or fabrications, whereas vertically split casings use all three types. The cast steel or cast iron casings are more commonly used in horizontally split cases since case pressure

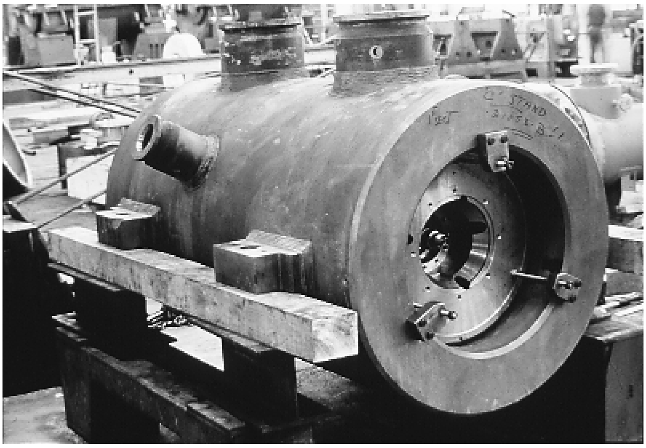

FIGURE 12.26 Reinjection compressor with a forged steel vertically split casing. *(Dresser-Rand Company, Olean, N.Y.)*

ratings are relatively low. Case patterns allow flexibility in the number of stages but result in fixed- as opposed to variable-stage spacing.

Advanced manufacturing and welding techniques are also being used in the production of compressor casings. Welded construction has supplemented the high-capacity line of cast cases and provides the option of purchasing horizontally or vertically split compressors for high-capacity low- and medium-pressure service. Manufacturing techniques used for welded casings are basically the same whether the compressor is horizontally or vertically split.

Forged steel vertically split casings (Fig. 12.26) are required for very high pressure applications. Case pressure ratings over 10,000 psi have been tested successfully for gas reinjection applications with units operating in the field well over 7000 psi.

12.5.2 Flow Path

Having completed our review of compressor casings, we now turn our attention to the stationary flow path. The stationary flow path is contained within the casing and is matched aerodynamically to the inlet and outlet passages and the impellers. Figure 12.27 depicts this stationary flow path in a vertically split compressor cross section. Note the casing components that include the heads.

Moving to a more detailed examination of a typical centrifugal compressor, we observe in Fig. 12.28 the stationary flow path and rotor, removed from the casing. This part of the compressor, referred to as the *bundle*, contains guide vanes, diaphragm, return bend, diffuser, and discharge volute. It is evident that on a vertically split compressor, the complete bundle is removed as a single piece. To remove the rotor, the bundle is usually designed with horizontal splits that allow removal of the top half. Some compressor designs employ one-piece rather than split-bundle stationary components, which are stacked onto the rotor shaft at the same time the impellers are installed.

Note also that the inlet wall is the first diaphragm and completes the inlet channel. The gas passage formed by the inlet wall directs the gas into the first impeller. The opposite side, inboard, of inlet wall forms the diffuser area from the first impeller. After the diffuser, the gas enters the return bend or crossover, which turns the gas streams 180°. The return channel guides the gas into the next impeller. The diaphragm is the stationary element between

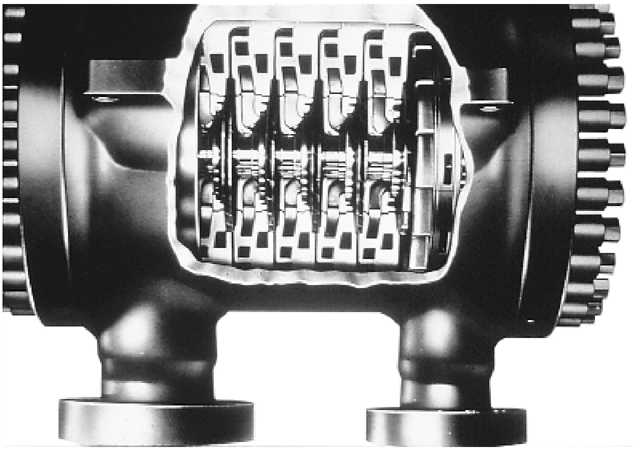

FIGURE 12.27 Stationary flow path in a vertically split compressor. *(Dresser-Rand Company, Olean, N.Y.)*

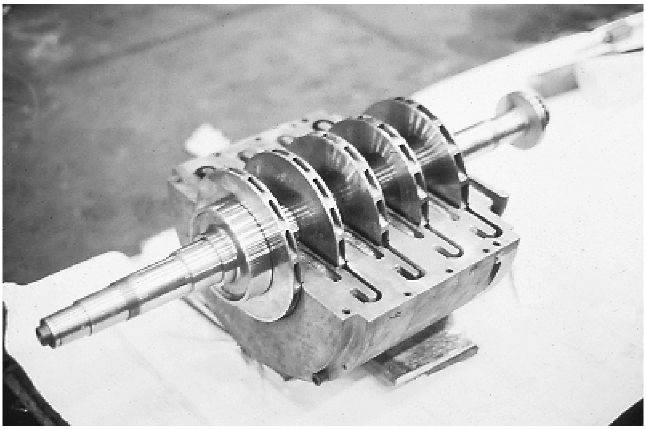

FIGURE 12.28 Stationary flow path and rotor. *(Dresser-Rand Company, Olean, N.Y.)*

two stages that forms half of the diffuser channel stage, the return bend, and half the return channel.

Figure 12.29 shows how the inlet guide vanes direct gas flow into the impeller "eye." One method of controlling the stage performance characteristics is through the use of different inlet guide vane angles. Guide vanes can direct the flow into the impeller against rotation, radially, or with impeller rotation. The guide vanes shown are of fixed predetermined angles.

If we want to change the compressor operating performance by means other than speed reduction, movable inlet guide vanes can be incorporated. They are more effective on single-stage compressors (see Fig. II.1), with diminishing effect as stages are added. It is extremely difficult from a mechanical standpoint to install and operate movable inlet guide vanes (Fig. 12.30) in any but the first stage of a centrifugal compressor.

Next, in Fig. 12.31, the return bend is clearly shown in the internal portion of the stationary flow path. After the gas leaves the last-stage diffuser, it is collected in a discharge

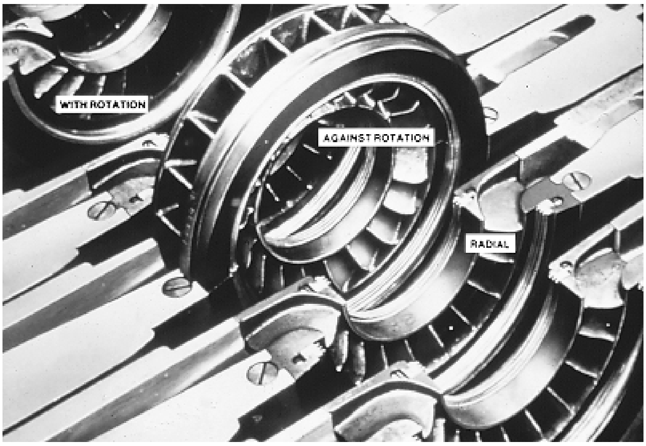

FIGURE 12.29 Inlet guide vanes, stationary (fixed) type. *(Dresser-Rand Company, Olean, N.Y.)*

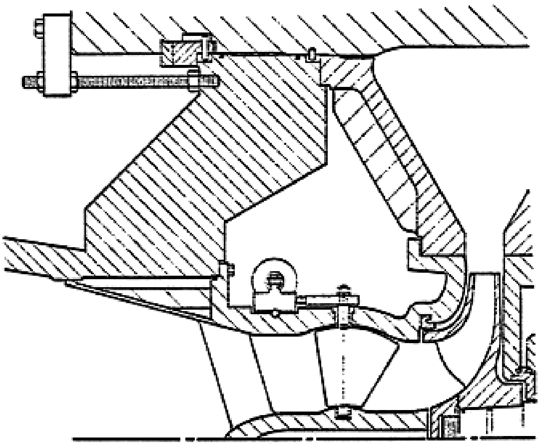

FIGURE 12.30 Movable inlet guide vanes. *(Dresser-Rand Company, Olean, N.Y.)*

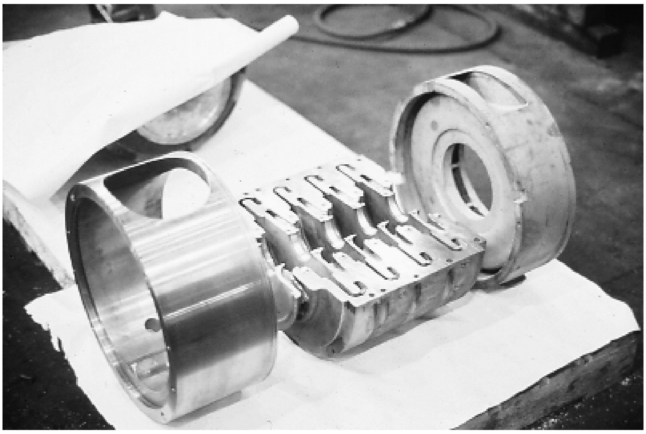

FIGURE 12.31 Internal return bend flow path. *(Dresser-Rand Company, Olean, N.Y.)*

volute (Fig. 12.32) and then directed to the discharge nozzles. The figure on the left shows a typical scroll-type over-the-impeller volute; on the right is a parallel wall diffuser followed by a more conventional spillover volute.

The scroll-type over-the-impeller volute (Fig. 12.19), as well as the spillover volute, are complex shapes from a manufacturing point of view and are usually a casting. The over-the-impeller volute does offer low-diffusion losses over a wide operating range but requires a larger case diameter and stage width than does the parallel wall diffuser-spillover volute. In horizontally split compressors the stationary flow-path components are designed so that they are removed with the top half. The rotor, resting in the lower half, is then readily accessible for inspection and/or removal. This is shown in Fig. 12.33.

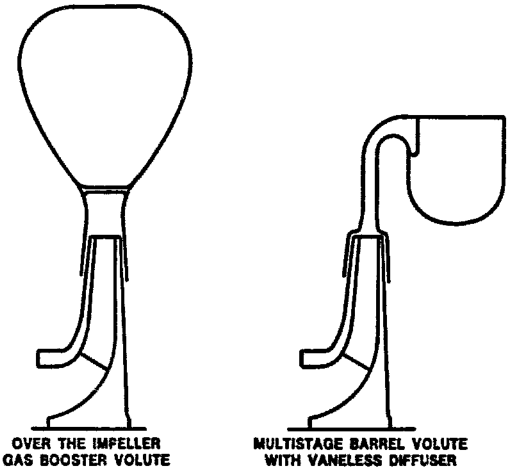

FIGURE 12.32 Discharge volutes: over-the-impeller and spillover types. *(Dresser-Rand Company, Olean, N.Y.)*

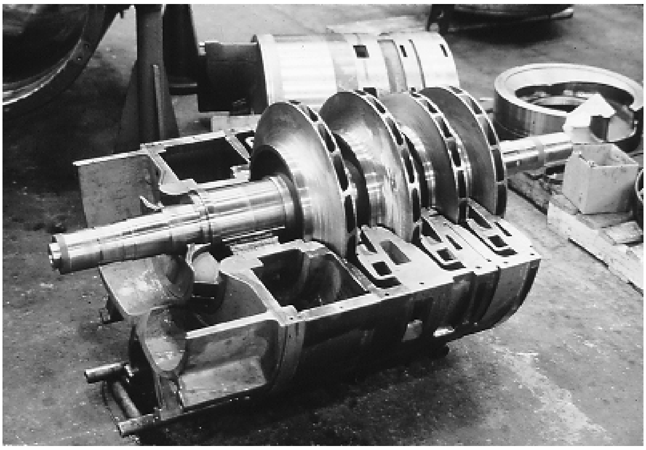

FIGURE 12.33 Compressor rotor resting in the lower half of stationary flow path components. *(Dresser-Rand Company, Olean, N.Y.)*

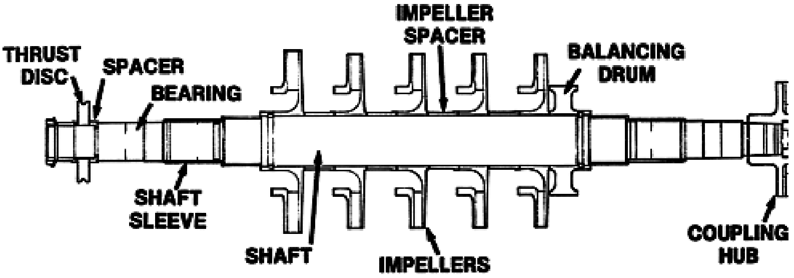

FIGURE 12.34 Compressor rotor nomenclature. *(Dresser-Rand Company, Olean, N.Y.)*

12.5.3 Rotors

Having examined the compressor case and stationary flow path, we now turn our attention to the rotating flow path, or rotor. A thorough understanding of rotor nomenclature is necessary to understand some important design considerations. Rotor nomenclature is explained in Fig. 12.34.

There is a step in the shaft at the bearing area. On the thrust bearing end, a precision ground spacer that butts against the shaft shoulder is installed. This spacer locates the thrust disk, which in turn will locate the rotor in the compressor.

The major components of a centrifugal compressor rotor are:

- Shaft
- Impellers
- Balancing drum (if required)
- Impeller spacer
- Thrust disk
- Coupling hub

In the seal area, sleeves are provided to protect the shaft. Under labyrinth seals, the sleeves are stainless steel; under oil film seals, the sleeves are often monel with a hard colmonoy or similar overlay to protect against scratches from dirt particles in the oil or gas.

Figure 12.35 shows a complete rotor being installed in a horizontally split centrifugal compressor. All rotor components have been attached to the shaft and the rotor has been balanced prior to installation.

The shaft is precision machined from an alloy steel forging. This solid rotor shaft design ensures maximum parallelism of rotor components. Impellers and balance pistons are normally forged steel, SAE 4330, with stainless steel available for corrosive gas applications. Impeller spacers are typically machined from a 400 series stainless steel.

Between each impeller is a spacer sleeve (Fig. 12.36). In addition to the function of locating the impellers on the shaft, sleeves also protect the rotor shaft in the event of contact with the labyrinths.

12.5.4 Impellers

A cross section of the impeller (Fig. 12.37) reveals the three components: blade, disk, and cover. The blade increases the velocity of the gas by rotating and causing the gas to move

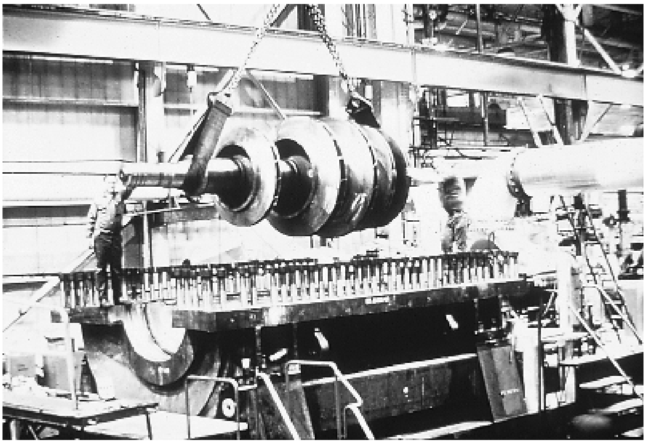

FIGURE 12.35 Compressor rotor installed in a horizontally split centrifugal compressor. *(Dresser-Rand Company, Olean, N.Y.)*

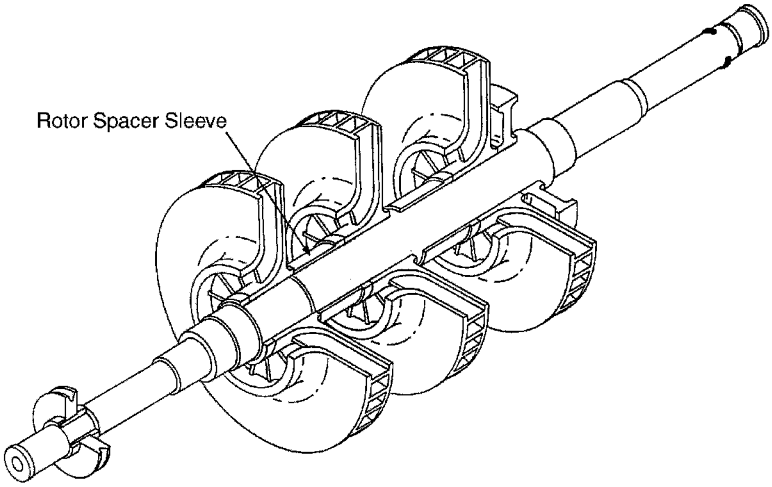

FIGURE 12.36 Spacer sleeves for a centrifugal compressor rotor. *(Dresser-Rand Company, Olean, N.Y.)*

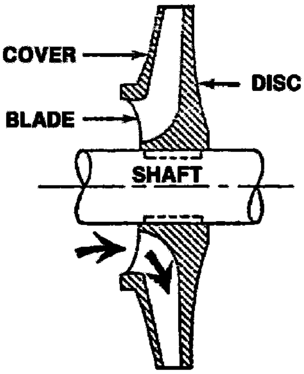

FIGURE 12.37 Cross-sectional view of an impeller. *(Dresser-Rand Company, Olean, N.Y.)*

from the inlet, the impeller eye, to the top or outside diameter. The impeller disk or hub is attached to the shaft and drives the blade. The cover is attached to the blades and confines the gas to the blade area.

To provide flexibility to meet the many process requirements, several types of impellers are used. These include closed impellers, which have a blade mounted between a disk and cover, the cover being the inlet side of the impeller; and open or semiopen impellers, which, as the names imply, consist of a disk and blade but have the cover removed (Fig. 12.38).

A number of manufacturing methods are used in the production of impellers. These include riveted construction, where the disk and covers are joined to the blades by rivets, cast construction, electrolytic machining, five-axis milling, and welding. It is noteworthy that five-axis milling is becoming increasingly important, and its availability for high-efficiency high-strength impellers should be explored first.

Over the history of the centrifugal compressor, the most universally used manufacturing method had been riveted construction. This method is rarely used today and has been replaced by welded impellers in modern installations.

Sand and die-casting techniques are available to fabricate various types of impellers. Advanced casting methods are applied in the manufacture of open impellers (Fig. 12.39).

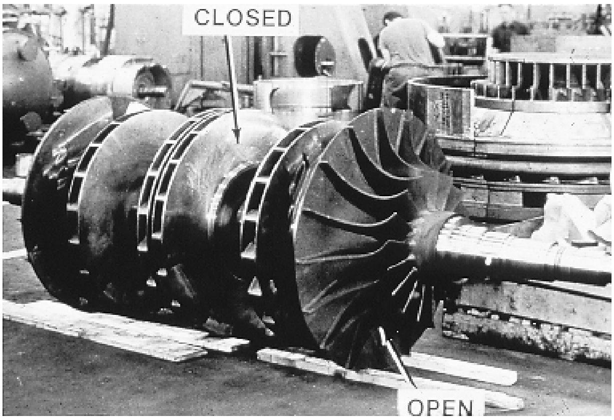

FIGURE 12.38 Impeller types found in centrifugal compressors. *(Dresser-Rand Company, Olean, N.Y.)*

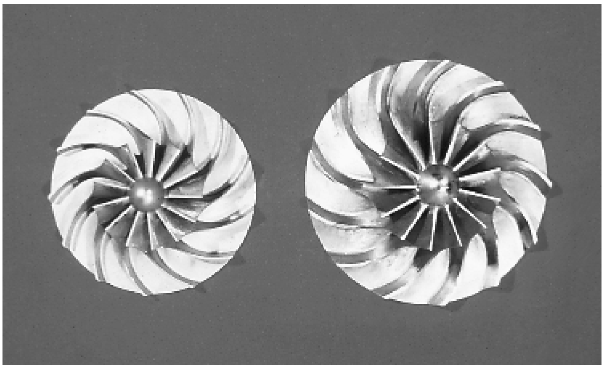

FIGURE 12.39 Cast three-dimensional open impeller. *(Dresser-Rand Company, Olean, N.Y.)*

Riveted impellers (Fig. 12.40) are fabricated by riveting the blade to both the cover and the disk. Two types of riveted construction exist. As shown, the blade sides are rolled over at a 90° angle and attached by rivets through the rolled-over portion. To decrease the susceptibility of the riveted impeller to corrosive and erosive failure, an integrally riveted impeller was developed. Integrally riveted impellers require a thicker blade since the rivets attach to the blade edge, thus eliminating the requirement to bend the blade 90° on both sides (Fig. 12.41).

Welded impellers are structurally homogeneous. Welded construction (Fig. 12.42) also allows maximum flexibility to alter aerodynamic designs. Pattern arrangements required for cast impellers and tools associated with electrochemical milling methods are not necessary to modify the aerodynamic design.

FIGURE 12.40 Riveted impeller, Z-type blading. *(Dresser-Rand Company, Olean, N.Y.)*

FIGURE 12.41 Integrally riveted impeller. *(Dresser-Rand Company, Olean, N.Y.)*

FIGURE 12.42 Structurally homogeneous welded impeller. *(Dresser-Rand Company, Olean, N.Y.)*

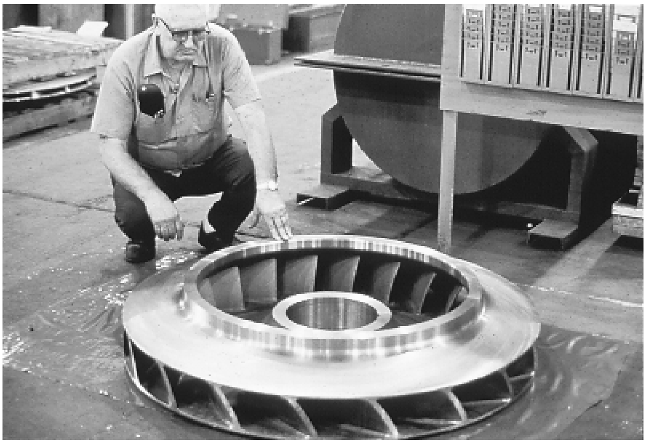

FIGURE 12.43 Three-piece welded impeller. *(Dresser-Rand Company, Olean, N.Y.)*

In impellers of high specific speed, where the three-piece and open construction techniques are employed, three-dimensional blade shaping provides optimum aerodynamic geometry.

Varying manufacturing techniques are used to produce the different types of welded impellers, including:

- Three-piece construction
- Open impeller construction
- Two-piece construction [tip width greater than $\frac{5}{8}$ in. (16 mm)]
- Two-piece construction [tip width less than $\frac{5}{8}$ in. (16 mm)]

In three-piece construction (Fig. 12.43) the disk and the cover are machined from forgings. The die-formed blades are then tack-welded to the cover with the use of locating fixtures. The final welding is a continuous fillet weld between the blade and the cover. Subsequently,

FIGURE 12.44 Two-piece welded impeller. *(Dresser-Rand Company, Olean, N.Y.)*

the blade cover assembly is joined to the disk by a continuous fillet weld between the disk and the blade.

Impellers of open construction consist of a disk and blades (Fig. 12.39). The cover is eliminated. This type of impeller is characterized by an inducer section that directs the gas flow into the eye of the impeller. The blades are either die formed or precision cast. The welding procedure is the same as for three-piece construction, with the final weld being a continuous fillet weld between the disk and the blade.

In two-piece construction (Fig. 12.44) the blades are machined on either the disk or cover forging. The impeller is completed by a continuous fillet weld to the mating piece (disk or cover) around the entire blade interface. This type of construction is used for impellers with a relatively low tip width/diameter ratio (i.e., low specific speed).

Observing Fig. 12.44, we note that the welding techniques described previously are limited to impellers with a channel width of more than $\frac{5}{8}$ in. (16 mm). Increasing numbers of applications are now requiring the advantages of welded construction for impellers with a channel width of less than $\frac{5}{8}$ in. (16 mm). To meet this need, an advanced welding technique provides a method of welding the blades to the disk from the outside of the disk. The method produces an impeller with greater strength than that of a riveted impeller because of the continuous weld along the entire length of the blades. Any blade contour may be designed without affecting the weldability of the impeller, thus minimizing compromises in aerodynamic design. Using this technique, welded impellers can be manufactured to the smallest practical aerodynamic width.

Figure 12.45 illustrates the wide range of impeller sizes required to serve the widely varying process industry applications. The large rotor is from a compressor with flow to 180,000 cfm (5100 m^3/min) and operates to a speed of 4000 rpm. The small rotor is for a compressor that has a flow capability to 3500 cfm (100 m^3/min) and operates at speeds to 20,000 rpm. This wide range of welded impeller sizes and types requires a variation of manufacturing techniques.

Balancing drums (Fig. 12.46) are employed to modify or adjust the axial thrust developed by compressor rotors. These drums are typically required when all impellers are facing in the same direction. A balancing drum is mounted behind the last stage impeller, as shown in Fig. 12.47.

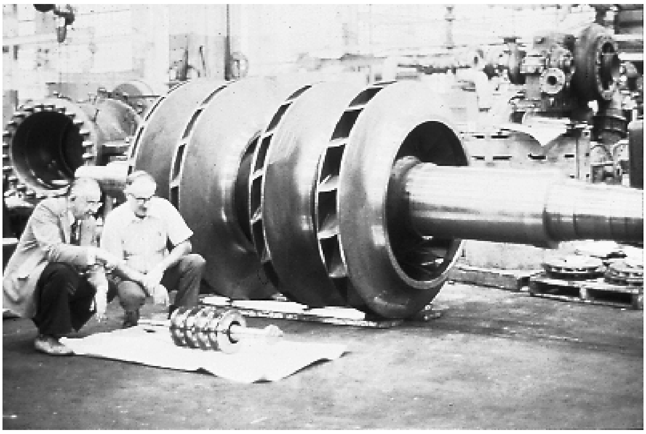

FIGURE 12.45 Rotor sizes used in centrifugal compressors. *(Dresser-Rand Company, Olean, N.Y.)*

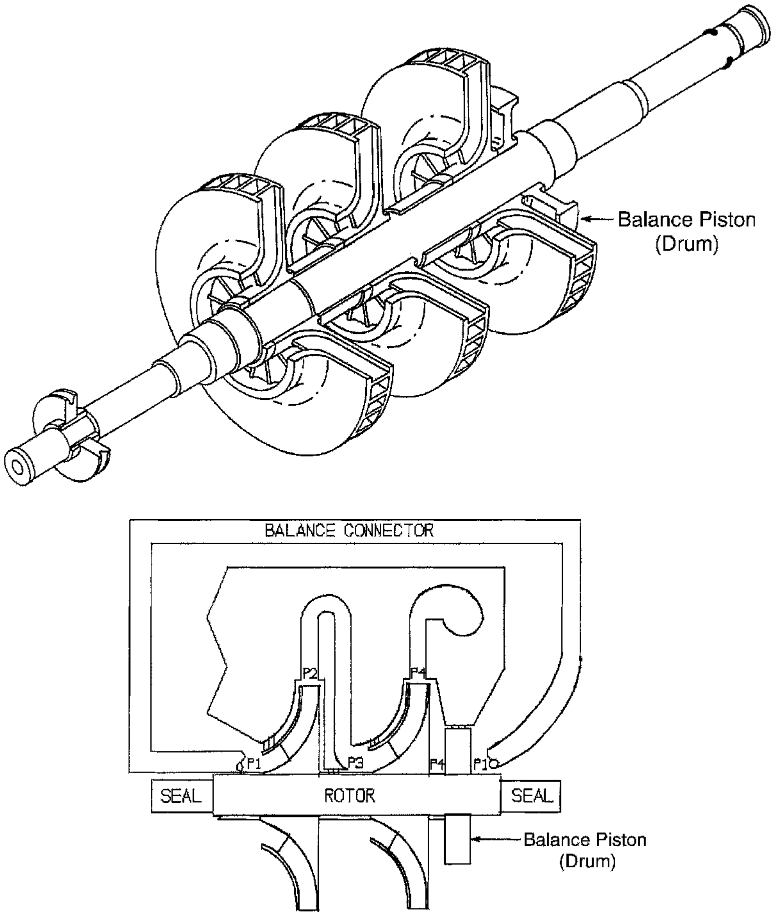

FIGURE 12.46 Balancing drum serves to modify axial thrust developed by differential gas pressures in compressors. *(Dresser-Rand Company, Olean, N.Y.)*

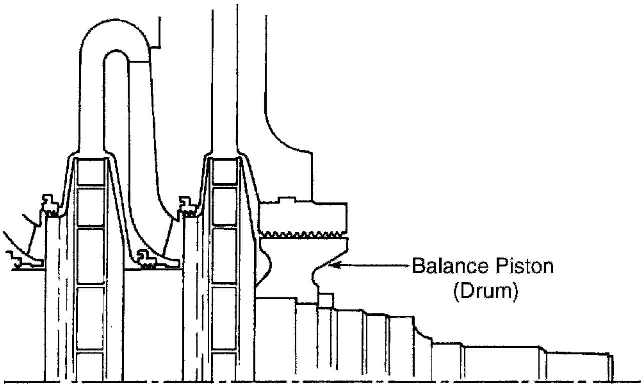

FIGURE 12.47 Balancing drum mounted behind a last-stage impeller. *(Dresser-Rand Company, Olean, N.Y.)*

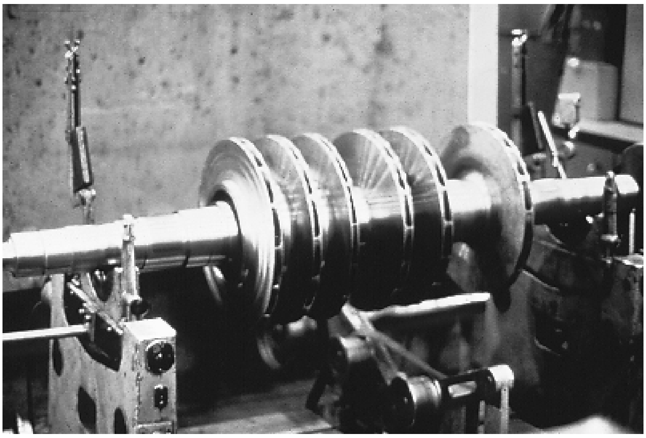

FIGURE 12.48 Centrifugal compressor rotor being balanced. *(Dresser-Rand Company, Olean, N.Y.)*

Impellers are mounted on the shaft with a shrink fit with or without keyways, depending on the frame size. Prior to rotor assembly, impellers are dynamically balanced and oversped. Impellers are mounted in pairs beginning at the center of the shaft; successive pairs of impellers are added, one from each end, until the rotor is complete. The rotor is dynamically balanced after the addition of each set of impellers. At each balancing operation, balance correction is done only on the newly added components. Figure 12.48 illustrates a balance operation.

As the flow requirements of a centrifugal compressor application increase, the use of radial-flow impellers may be restricted because of low efficiency. The development and use of mixed-flow impellers (Fig. 12.49) results in acceptable efficiencies since the gas is allowed to flow through the impeller channels at angles less than 90°. As the name implies, a mixed-flow impeller is neither radial flow or axial flow but somewhere between the two extremes.

FIGURE 12.49 Mixed-flow impeller. *(Dresser-Rand Company, Olean, N.Y.)*

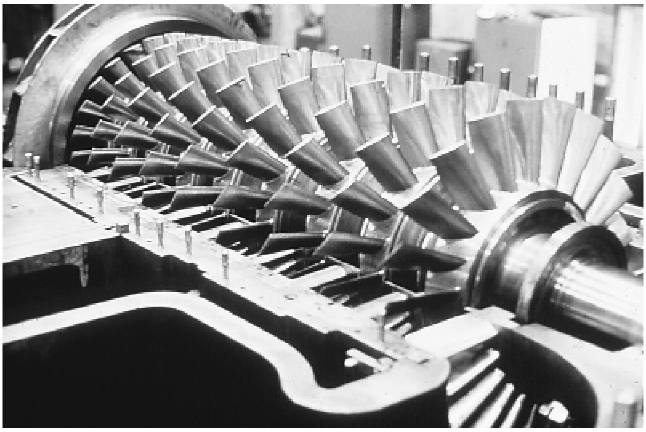

FIGURE 12.50 Axial-bladed compressor rotor. *(Dresser-Rand Company, Olean, N.Y.)*

12.5.5 Axial Blading

On very high flow applications at low suction pressure, such as atmospheric air, the use of axial-bladed compressors (Fig. 12.50) is attractive. Because the gas flows axially through the rotating flow path, turning losses are minimized and thus high efficiency is attainable. Limitations exist in using axial-bladed compressors in high-density gas streams, due to resulting high rotor thrust loads. Further consideration must be given to the fact that axial compressor performance generally results in less stability and reduced overload characteristics compared to those of typical radial impellers with backward bent blading.

12.5.6 Seals

The compressor industry has developed a complete range of seals for all types of applications. Four basic types of seals are offered: (1) labyrinth, (2) contact, (3) oil film, and (4) gas seals.

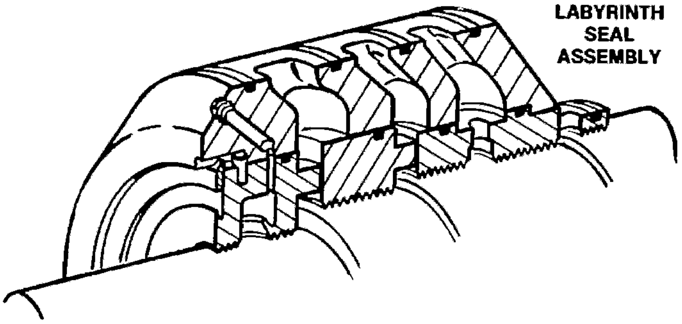

FIGURE 12.51 Labyrinth seals. *(Dresser-Rand Company, Olean, N.Y.)*

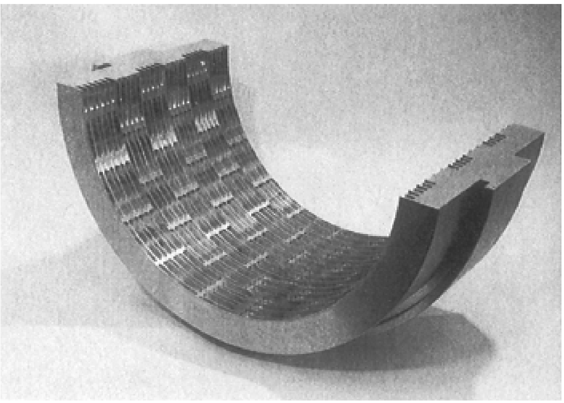

FIGURE 12.52 Special anti-instability labyrinth, or honeycomb seal. *(Nuovo Pignone, Florence, Italy)*

Labyrinth seals are suitable for use as main casing seals for compressors operating at moderate pressures. These seals are available with ports for injecting inert gas and/or educting process gas as required, depending on the process. This type of seal (Fig. 12.51) has been used for over 25 years in air and oxygen compressors. It is almost identical to the labyrinth seals typically found in steam turbines.

Modern labyrinth seals are often made of a honeycomblike material (Figs. 12.52 and 12.53). Honeycomb seals provide an order-of-magnitude more direct damping, lower whirl frequency ratios, and reduced leakage compared with conventional labyrinth seals. The whirl effects are causing aerodynamic instabilities or *rotating stall*. Counter-measures are sometimes based more on experimentation than on solid computer-generated analytical predictions. Nevertheless, both honeycomb seals and shunt holes (Fig. 12.54) will reduce both gas whirl (or swirl) risk and intensity. This abatement action is sometimes called *reduced cross-coupling*, although purists will assign minor differences to the respective definitions of the two terms.

Published nondimensional data on honeycomb seals are given in Figs. 12.55 and 12.56; these are of primary interest to designers of high-pressure compressors since swirl effects and the attendant aerodynamic instabilities are usually associated with high differential pressures.

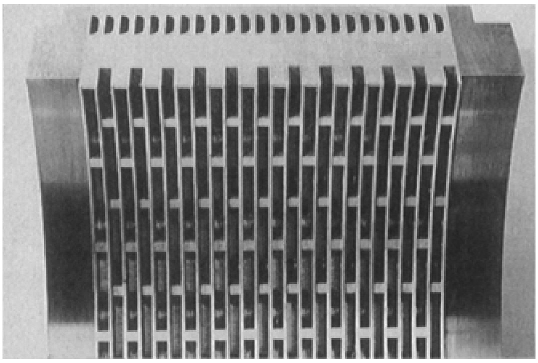

FIGURE 12.53 Honeycomb seal segment for a high-pressure centrifugal compressor. *(Nuovo Pignone, Florence, Italy)*

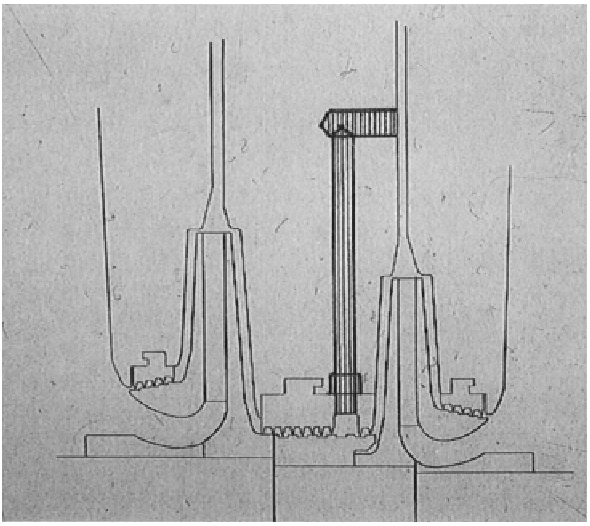

FIGURE 12.54 Shunt holes connecting the vaneless diffuser of the last impeller with the first grooves of the labyrinth. This minimizes inlet gas swirl and thus cross-coupling action. *(Nuovo Pignone, Florence, Italy)*

The mechanical contact seal (Fig. 12.57) was developed in the early 1950s. The major benefit of this type of seal is its ability to maintain a positive seal when the compressor and oil systems are shut down. Mechanical contact seals are suitable for intermediate pressures of 450 psi (32 kg/cm^2) and are particularly popular in refrigeration applications.

The primary components of this seal are:

- A spring-loaded stationary seal ring
- A floating carbon ring
- A rotating seal ring
- A spring-loaded shutdown piston
- An oil pressure breakdown ring
- A labyrinth with provision for buffer gas injection

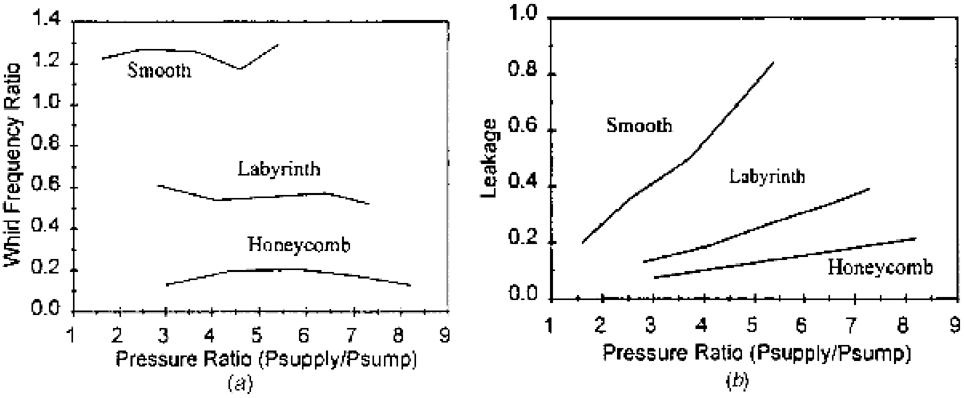

FIGURE 12.55 Rotor stability and leakage of honeycomb seals: (*a*) honeycomb seals improve rotor stability; (*b*) honeycomb seals leak less. *(Rotordynamics-Seal Research, North Highlands, Calif.)*

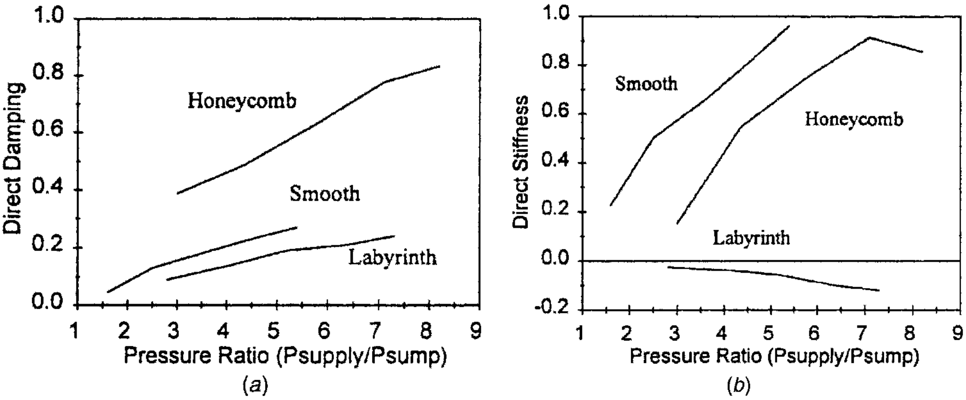

FIGURE 12.56 Damping and stiffness of honeycomb seals: (*a*) honeycomb seals produce more damping; (*b*) honeycomb seals have positive stiffness. *(Rotordynamics-Seal Research, North Highlands, Calif.)*

The contact seal design is unique in that it provides a separate sealing surface in the shutdown condition. In the event of a failure of the carbon ring, a standard contact seal would be inoperative. The design will still maintain a positive seal at shutdown conditions; consequently, it provides a fail-safe feature.

When the compressor is stopped under pressurization, the shutdown piston is held closed by this gas pressure. Sealing is accomplished by means of an elastomeric ring sealed against the rotating shaft ring. For operation, oil is introduced at a pressure of 25 psi (1 to 2 kg/cm^2) above the gas pressure. This oil pressure overcomes the gas pressure and spring tension on the shutdown piston, causing the piston to open and admit oil flow to the carbon ring seal. As the compressor is started, the carbon ring floats between the rotating ring and the stationary ring. The carbon ring seeks its own rotational speed, approximately one-half of shaft speed. The seal is loaded by springs, forcing the stationary ring against the carbon ring.

A small amount of oil flows across the carbon ring. This oil is prevented from contacting the gas stream by means of a labyrinth seal with an oil slinger on the shaft and is drained to

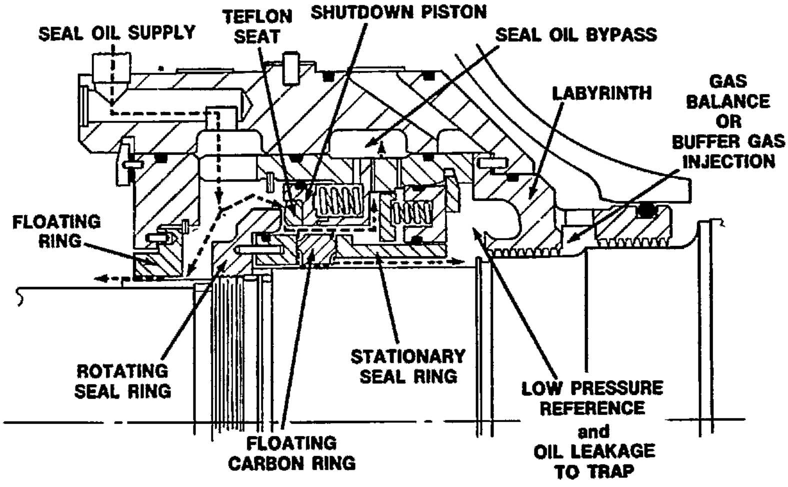

FIGURE 12.57 Mechanical contact seals. *(Dresser-Rand Company, Olean, N.Y.)*

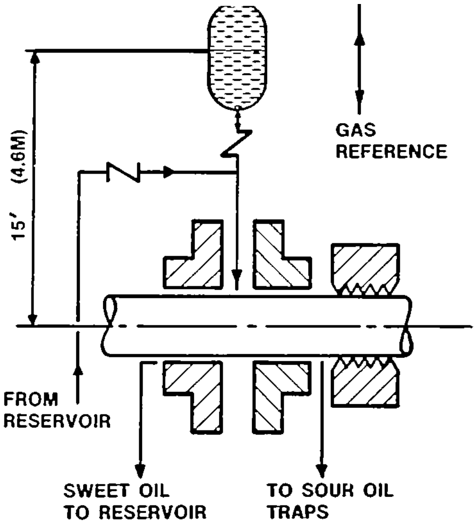

FIGURE 12.58 Oil film seal assembly. *(Dresser-Rand Company, Olean, N.Y.)*

a trap assembly. The majority of oil flows across the entire seal assembly, thus cooling the seal. It is then returned to the reservoir. A small amount of oil flows across a floating ring on the outboard end into the bearing chamber. The floating ring provides an orifice that maintains oil pressure in the seal area.

It was the development of the oil film seal (Fig. 12.58) that made possible the application of centrifugal compressors in high-pressure applications for hazardous gases. This seal design was introduced in gas transmission service in 1948. The major benefits of the oil film seal are:

- *Simplicity.* The oil film seal is simple in concept and does not involve rotating or contacting parts. This provides minimum service and ease of maintenance.

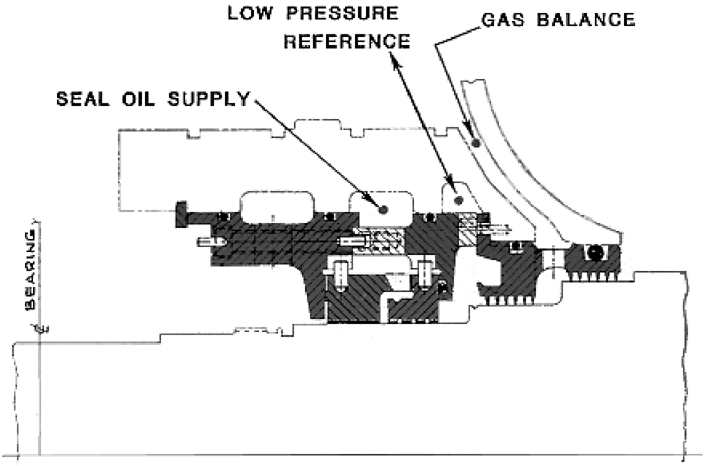

FIGURE 12.59 Oil film seal details. *(Dresser-Rand Company, Olean, N.Y.)*

- *High pressure.* The oil film seal has higher pressure capability than that of other types of seals, and with continued development, its capability may be virtually unlimited.
- *Fail-safe.* In the event of damage to seal rings, oil consumption will increase, but a seal will be maintained as long as sufficient oil is supplied, allowing continued operation of the compressor.

As further illustrated in Fig. 12.59, the oil film seal consists of two or more babbitted rings that do not rotate but are free to float radially to follow shaft movement. Oil from an overhead tank (see Fig. 12.58) is introduced between the rings at a pressure slightly above the reference gas pressure applied to the top of the tank.

The oil flows across these rings to the internal and external drains. Oil flow is quite small across the inner ring because of the low [5 psi (0.35 kg/cm^2)] differential pressure, which is controlled by the height of the tank above the compressor centerline. Oil flowing across the internal ring opposes the outward flow of gas, thus effecting a positive seal. This small amount of oil is insufficient for cooling the inner ring. The major flow of oil passes through the outer ring or rings and takes the full pressure drop between the oil supply pressure and the atmosphere drain to the reservoir. This oil flow passes by the back of the inner seal ring and provides cooling of this ring.

An optional labyrinth with provision for buffer gas injection can be provided, when required, to keep the seal oil drain separate from the lube oil drain. As described previously, the basic oil film seal consists of a high-pressure or inner ring and a low-pressure or outer ring. As seal pressures began to exceed 1000 psi (70 kg/cm^2), it became necessary to modify the seal to add another ring, allowing the pressure breakdown from seal supply pressure to atmosphere to be accomplished over two rings.

To properly seal a centrifugal compressor, careful attention must be given to gas pressure within the casing. A series of connecting ports allows the designer to seal against a known and predetermined internal pressure. The most significant element is to provide a pressure-flow bleed connection between the gas balance port and the seal reference area. While the recompression of this balance piston chamber gas requires additional shaft horsepower, it

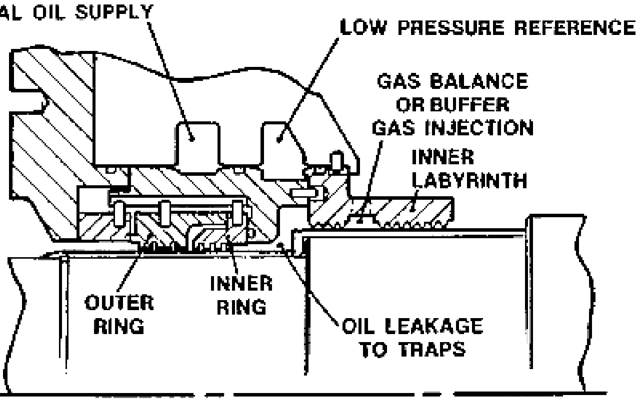

FIGURE 12.60 Balance piston chamber and seal reference area relationship. *(Dresser-Rand Company, Olean, N.Y.)*

results in sealing against an internal gas pressure slightly above suction pressure and not the high-discharge pressure. It also balances and thus equalizes the gas pressure on the seals at both the suction and discharge ends of the compressor, thereby simplifying the seal oil system controls. Figure 12.60 illustrates the essentials.

Trapped bushing seals (Fig. 12.61) are often incorporated in compressors made by the A-C Compressor Corporation. Under static conditions the trapped bushing seal operates like any other bushing-type seal. A sealant (normally, the oil from the lubrication system) is supplied at about 10 gal/min to the seal at a positive pressure above that of the process gas. The sealant flows in three ways:

1. A relatively small portion of the sealant buffers the process gas at 1 to 2 gal/hr in the clearance area between the inner portion of the stepped dual bushing (4) and the impeller (2). At this point the sealant enters the inner drain and is ultimately bled down to atmospheric pressure by way of a trap.
2. A larger portion of the sealant takes a pressure drop to the atmospheric outer drain between the outer portion of the stepped dual bushing (4) and the impeller (2). This flow rate is a function of the process gas pressure level.
3. The excess sealant passes through the stator (3) cooling passages and out of the seal, where a 5-ft head of sealant is maintained above the process gas pressure by a level control. This level controller (LC) modulates a level control valve to provide a pressure drop for the sealant's return to the reservoir.

While operating normally, the trapped section of the trapped bushing seal performs like a pump during dynamic operation. All of the sealant flow paths are exactly the same as during static operation except that the sealant buffering the process gas is whirled by the trapped portion of the seal, which consists of two principal parts:

1. The step within the stepped dual bushing (4) works in combination with the outer shoulder on the rotating impeller (2) as a pump, to ensure that the entire clearance area between the inner portion of the stepped dual bushing (4) and the impeller (2) is

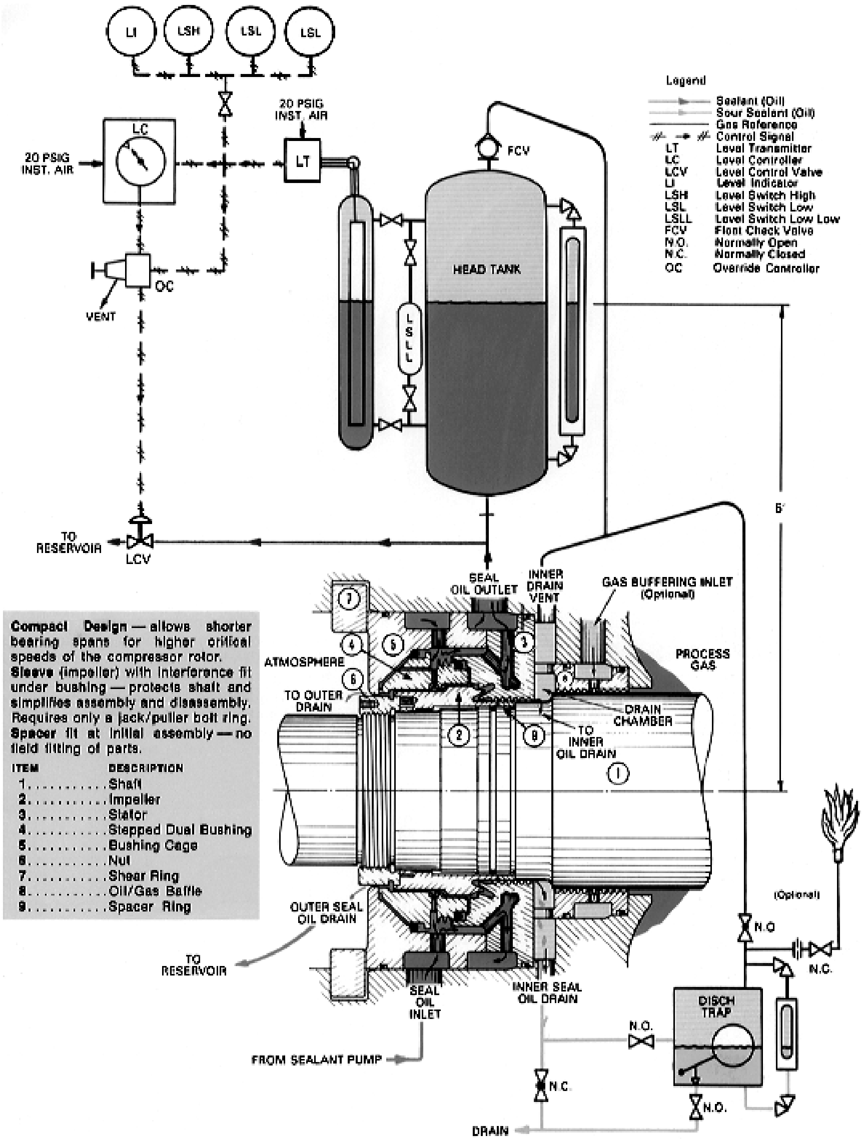

Compact Design — allows shorter bearing spans for higher critical speeds of the compressor rotor. **Sleeve** (impeller) with interference fit under bushing — protects shaft and simplifies assembly and disassembly. Requires only a jack/puller bolt ring. **Spacer** fit at initial assembly — no field fitting of parts.

ITEM	DESCRIPTION
1.	Shaft
2.	Impeller
3.	Stator
4.	Stepped Dual Bushing
5.	Bushing Cage
6.	Nut
7.	Shear Ring
8.	Oil/Gas Baffle
9.	Spacer Ring

FIGURE 12.61 Trapped bushing seal system. *(A-C Compressor Corporation, Appleton, Wis.)*

a positive pressure level with respect to the process gas. Pressure patterns in this clearance area are similar to those in a lightly loaded journal bearing.

2. The portion of the stator (3) that meshes with the inner portion of the rotating impeller (2) acts as a dead-end pump without a suction source. The pumping action just balances the head of the pumping action of the outer shoulder of the impeller (2) plus the 5-ft head maintained in the head tank; hence, there is no pressure drop through the clearance between the stepped inner portion of the dual bushing (4) and the impeller (2). This pressure drop being zero, the inner sealant flow is considerably less than an untrapped bushing seal.

The fifth major type or configuration of compressor seal is the *gas seal.* Developed in the late 1970s, this relatively new sealing device is of sufficient importance to be given special coverage in Chapter 13.

12.6 BEARING CONFIGURATIONS

12.6.1 Radial Bearings

Radial bearings, sometimes referred to as *journal bearings*, support the compressor rotor. Technology in bearing design has increased significantly over the years to meet the increasing demands on the equipment. The original centrifugal compressors were furnished with plain sleeve bearings. The typical fully concentric straight-sleeve bearing was discovered to be inadequate as rotor speed increased dramatically in the late 1940s. In the 1950s, a pressure dam bearing design was developed to increase resistance to half-frequency whirl. The bottom half of a bearing liner is the same as in the straight-sleeve bearing, but the top half is relieved (Fig. 12.62). Thus, an area of high pressure is generated where the relief slot terminates. This increases the bearing loading. Continuing development has led to improvement in the stability of lightweight rotors operating at high speeds. This work culminated in the multishoe tilting pad radial bearing (Figs. 12.63 and 12.64). This bearing design has been so successful that it is now considered standard throughout the industry. In tilting pad radial bearings, the pad surface in contact with the bearing housing is radiused, allowing it

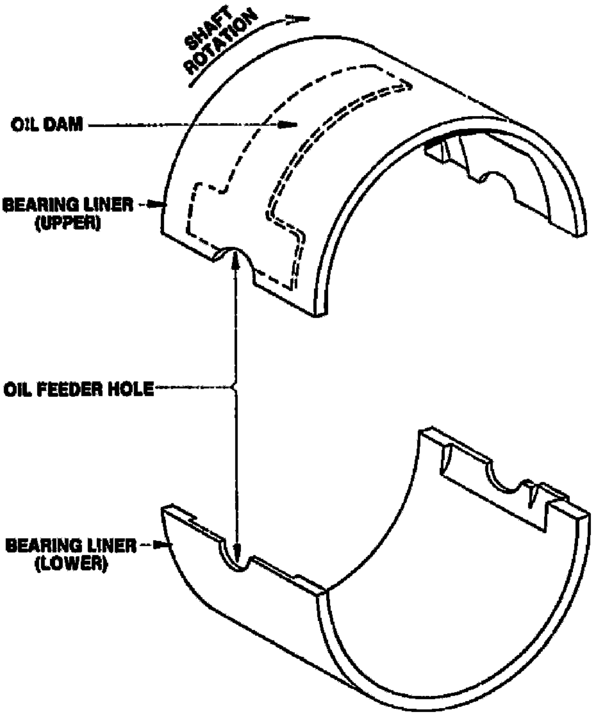

FIGURE 12.62 Pressure dam bearing. *(Dresser-Rand Company, Olean, N.Y.)*

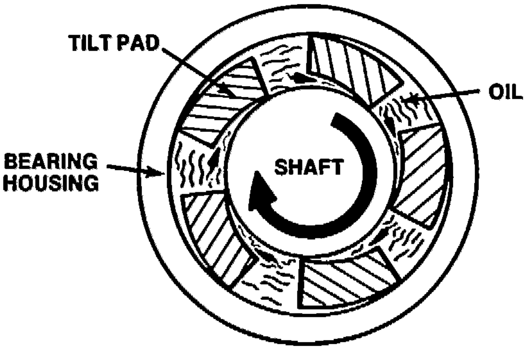

FIGURE 12.63 Tilt pad bearing. *(Dresser-Rand Company, Olean, N.Y.)*

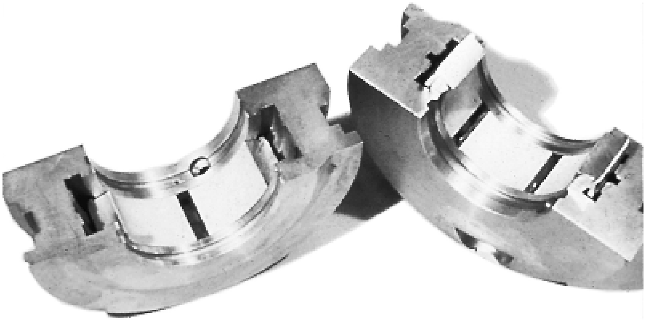

FIGURE 12.64 Radial tilt pad bearing assembly. *(Dresser-Rand Company, Olean, N.Y.)*

to pivot against the bearing housing. As the shaft rotates, a hydrodynamic film is formed between the journal and each pad. The oil enters the clearance between each pad and the shaft, tending to force the pad leading edge away from the shaft. Since the pad can pivot or tilt in its housing, the clearance at the trailing edge of the pad is reduced and the clearance at the leading edge of the pad is increased. This results in a wedge-shaped clearance between the pad and the shaft that produces hydrodynamic pressure in the bearing. By making design adjustments in the shape of the pads and bearing clearance, bearing stiffness and damping characteristics can be controlled.

The tilting pad bearing shown in Fig. 12.64 is a five-shoe bearing that has one pad located on the vertical centerline in the lower half of the bearing housing. This ensures that the shaft is supported properly when it is at rest. Other tilting pad bearings may have three or four shoes, and not all rotors are designed for load-on-pad (i.e., load-between-pad orientation may be necessary to obtain desired rotor behavior at high speeds).

12.6.2 Thrust Bearings

One of the most critical components of a centrifugal compressor is the thrust bearing (Fig. 12.65). Axial thrust is generated in a centrifugal compressor by the pressure rise through the impellers. The major portion of the thrust load is compensated by either a balancing drum or by placing the impellers in a back-to-back arrangement, whereby the thrust generated by

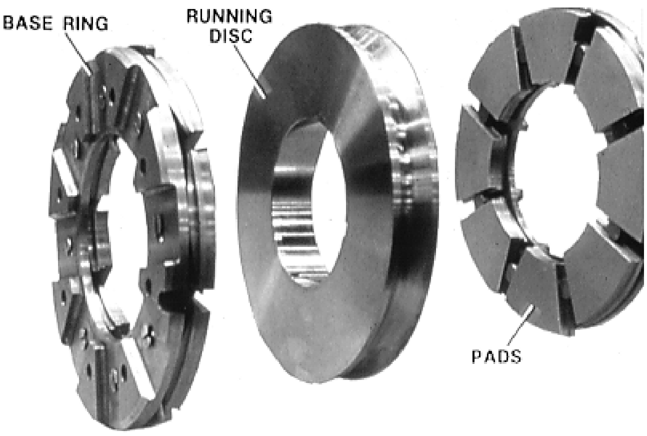

TILT PAD THRUST BEARING ASSEMBLY

BEARING PAD

FIGURE 12.65 Thrust bearing assembly. *(Dresser-Rand Company, Olean, N.Y.)*

one set of impellers opposes the thrust generated by the other set of impellers. In either case, the relatively small residual load is carried by the thrust bearing. The thrust bearing must also be suitably designed to withstand additional load and thrust reversals that may occur during normal operating conditions.

The pressure environment surrounding each impeller creates an unbalanced axial force on the impeller and thus the rotor. The total axial unbalance on the rotor is calculated and is first compensated by the installation of a balance piston as part of the compressor design. The balance piston is generally sized to compensate for approximately 100 + 10% of the total unbalance force generated by the impellers at the design operating parameters. The remaining or resulting unbalance force or thrust on the rotor is absorbed by the casing through the thrust bearing.

Figure 12.65 depicts the actual bearing parts, including the base ring, running disk, and bearing pads. This bearing design has been extremely successful as evidenced in successful operation in thousands of centrifugal compressors in the process industry. It has exhibited excellent load-carrying capabilities and even proven ability to withstand reverse rotation without damage to the bearings.

As an option, self-equalizing bearings (Fig. 12.66) can be provided on large frame compressors. This option can be applied when there is concern for potential thrust disk misalignment with the shaft. The self-equalizing bearing provides a uniform distribution of load on the thrust shoes over a wider range of thrust disk misalignment than can be accommodated by standard bearings. The disadvantage of this optional arrangement is that a greater shaft overhang is required which can become a limiting factor in critical speed analysis or rotor dynamics studies.

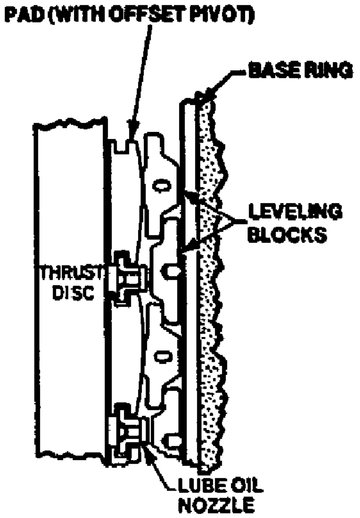

FIGURE 12.66 Self-equalizing thrust bearing. *(Dresser-Rand Company, Olean, N.Y.)*

12.6.3 Flexure Pivot Tilt Pad Bearings

Up to now, our overview dealt exclusively with rocking pivot tilt pad bearings. The insert in Fig. 12.67 allows us to compare these more conventional tilt pad bearings to a relative newcomer, the Flexure Pivot tilt pad bearing. The one-piece construction of this particular tilt pad bearing eliminates the multipiece construction typical of conventional tilt pad bearings. This also reduces the manufacturing tolerances significantly, as can be visualized from Fig. 12.68, which depicts a split-design Flexure Pivot tilt pad bearing. Thrust-type Flexure Pivot bearings have been supplied with a number of compressors, and Fig. 12.69 shows this simple, yet effective design.

A recent development is the hydraulically fitted thrust runner disk (Fig. 12.70). On centrifugal compressors, the thrust disk must be removable from the shaft to enable the inner seals to be removed from the shaft during maintenance. To prevent fretting of the shaft material under the thrust disk, the common method of attachment of the thrust disk is by shrink fitting. Shrink fitting by heating the disk is unacceptable because of the obvious hazards of applying open flame heat to the disk at the plant site.

The hydraulically fitted thrust disk shown here allows removal of the disk without heating the rotor. This design features a thin sleeve that is mounted to the shaft with a loose fit. The outside surface of the sleeve is cone shaped or tapered to allow the thrust disk to be mounted onto the sleeve by hydraulic pressure.

To remove the hydraulically fitted thrust disk, one proceeds as shown in Fig. 12.71. Oil at high pressure from pump 1 is supplied through holes in the center of the shaft and sleeve to expand the thrust disk over the sleeve. Pusher pump 2 pushes the disk on the sleeve. Releasing the hydraulic pressure on pump 1 allows the thrust disk and sleeve to shrink to the shaft. The high 1.5 mils/in. (1.5 μm/mm) of shaft diameter shrink fit ensures a tight fit on the disk and sleeve to the shaft.

The coupling hubs of most modern centrifugal compressors are mounted hydraulically. The resulting interference fit allows the transmission of torque from the driver to the compressor without the use of keys or keyways. The hydraulic-fit method of coupling attachment involves a tapered shaft end, a matching taper in the coupling bore, and a method of

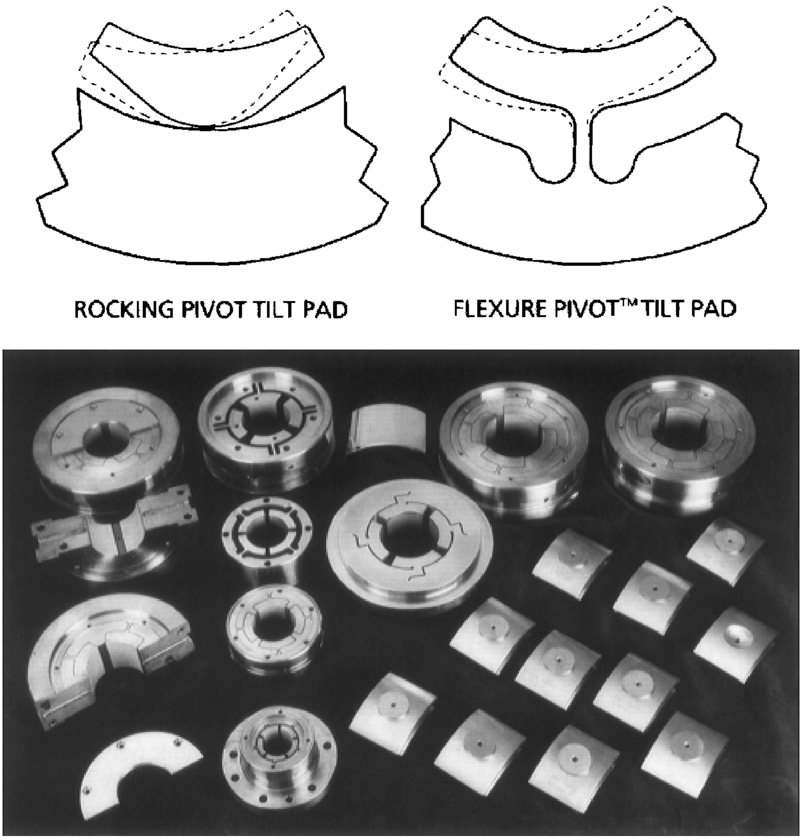

FIGURE 12.67 Radial Flexure Pivot tilt pad bearings. *(Bearings Plus, Inc., Houston, TX.)*

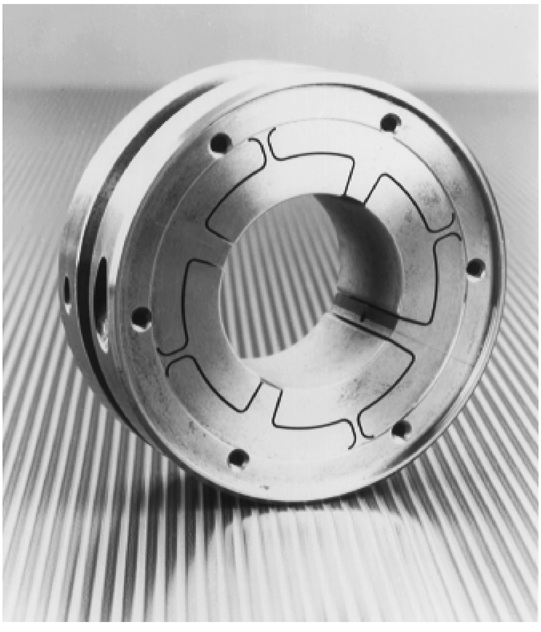

FIGURE 12.68 Radial Flexure Pivot tilt pad bearing, split design. *(Bearings Plus, Inc., Houston, TX.)*

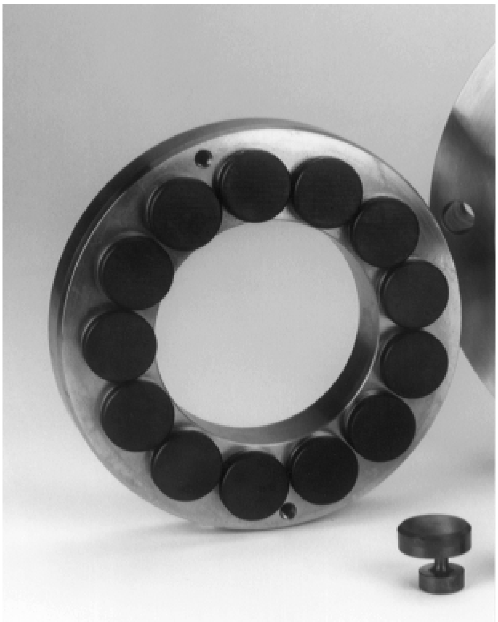

FIGURE 12.69 Thrust-type Flexure Pivot bearing for a small compressor. *(Bearings Plus, Inc., Houston, TX.)*

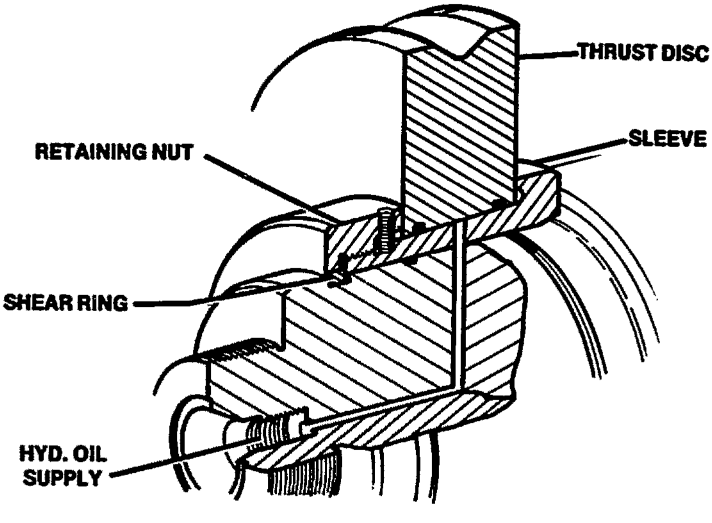

FIGURE 12.70 Hydraulically fitted thrust disk. *(Dresser-Rand Company, Olean, N.Y.)*

introducing high-pressure oil between the shaft and the coupling hub. A high-pressure oil fitting is provided in the end of the shaft. The coupling hub is installed on the end of the shaft, and high-pressure oil is introduced to expand the hub, which is then moved axially along a shaft taper to a measured distance in relation to the shaft end. Once the coupling is in place, oil pressure is released, and the coupling assumes a tight shrink fit on the shaft end (Fig. 12.72).

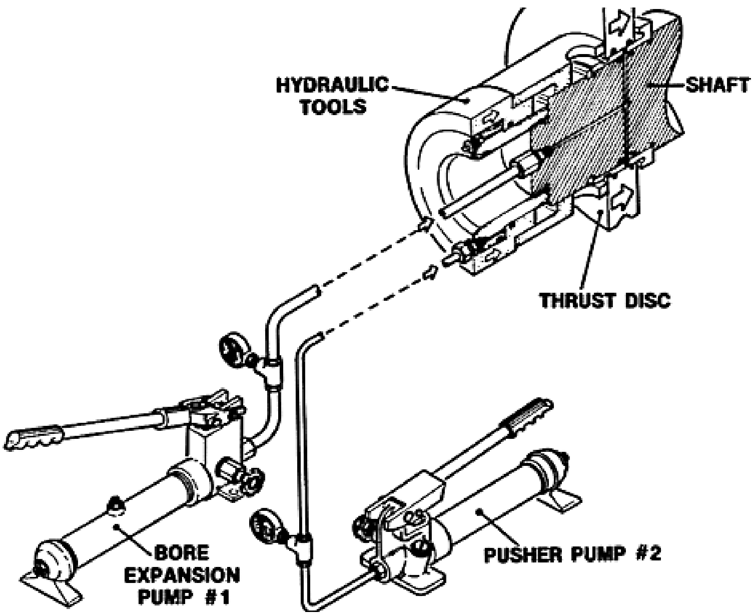

FIGURE 12.71 Hydraulic fit-up procedures. *(Dresser-Rand Company, Olean, N.Y.)*

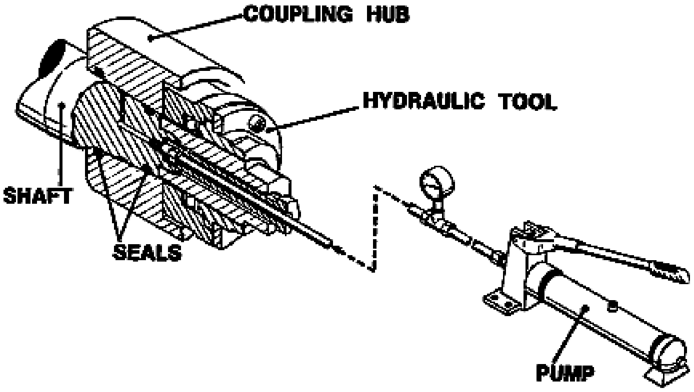

FIGURE 12.72 Hydraulically fitted coupling hub. *(Dresser-Rand Company, Olean, N.Y.)*

An alternative method of hydraulically mounting coupling hubs involves the injection of high-pressure hydraulic fluid through a threaded port machined into the coupling hub, 90° to the coupling or shaft axis. A hydraulic ram then pushes the expanded hub axially up the tapered shaft.

Centrifugal compressors require one or more major support systems to supply oil to lubricate the bearings, contact seals, and monitoring or control system. A typical lubricating system furnishes clean cool oil to the journal and thrust bearings. The lube system can be separate or combined with the seal oil system. This important subject is dealt with later in the book. Also, to properly monitor, control, and protect a complex and expensive piece of machinery such as a high-speed centrifugal compressor, a variety of systems are available.

A well-designed control system, including surge control, is a key element in the reliable operation of the centrifugal compressor. Again, this is discussed separately.

12.7 CASING DESIGN CRITERIA

The requirements for particular capacity and pressure capabilities of a centrifugal compressor design are determined by a manufacturer based on an analysis of the markets being served. Once a market need is determined, conceptual design for the equipment can begin. The casing receives much initial attention, as it represents the major pressure-containing structure.

The maximum-capacity requirement determines the areas required both inside the compressor casing and in the attached nozzles. The pressure requirement influences choices as to whether the casing (often called the *case*) can be horizontally or vertically split; whether it can be cast, formed from plate steel, or must be forged; what approximate thicknesses are required; and what form the nozzle connections must take. ASME formulas, from Section VIII, Division 1 of the ASME Code, can be used to rough out a minimum case thickness to start. API Standard 617 requires that all cases be designed such that hoop-stress values comply with ASME Code maximum allowable stress values.

As an example, a case for a large-capacity propylene refrigeration compressor was made from steel plate, ASTM A516, grade 65 (minimum tensile strength of 65,000 psi). The ASME Code permits a maximum allowable stress of one-fourth of the minimum tensile strength: thus, 16,250 psi. The casing inside diameter was sized at 112 in. for the large-volume flow. For a case rating of 350 psig, with a requirement for 100% radiograph inspection of the welds, the minimum case wall thickness is

$$\begin{array}{rr} t = \dfrac{PR}{SE - 0.6P} = \dfrac{(350)(56)}{(16,250)(1.0) - (0.6)(350)} & = 1.222 \text{ in.} \\ \text{corrosion allowance} & \underline{+0.125 \text{ in.}} \\ \text{minimum allowable wall thickness} & 1.347 \text{ in.} \end{array}$$

where t = thickness, in.
P = pressure, psig
R = radius, in.
S = allowable stress, psi
E = joint efficiency

It should be pointed out that the actual case wall thickness for the compressor above was 3.75 in., almost three times the minimum required. Compressor case thicknesses are usually quite conservative compared to code thickness requirements, since the primary design criterion is the mechanical rigidity of the case. Casing hoop-stress levels, based on a simplified formula of stress $= P \times R/t$, at maximum rated pressure, typically fall in the following ranges:

3,000–5,000 psi	horizontally split, cast iron
5,000–7,000 psi	horizontally split, cast steel
5,000–7,000 psi	horizontally split, fabricated steel plate
6,000–9,000 psi	vertically split, fabricated steel plate
10,000–16,000 psi	vertically split, forged steel

Account must be taken of the location and support of end closure heads and internal pieces, as required. Deflections at these positions must be held within predetermined limits. Consider, for example, an O-ring on the outside diameter of a vertically split case bundle. O-rings are commonly used between the bundle and case to prevent recycle of gas in a compressor section. The case growth under pressure must be considered at the O-ring land location to ensure that the O-ring is not extruded in operation. O-rings in the outside diameter of the heads at the case ends present the same problem. Neither would it be desirable to have a horizontally split case deflect to such a degree as to allow opening of stationary internal splits, again causing excessive recycle flow. Deformation at the case rail fits must be held to reasonable levels to control split gaps and interstage labyrinth seal clearances.

Horizontally split cases create an additional concern over the pressure capability of the split joint. Split flanges must be rigid enough to maintain their shape and proximity at pressures of 1½ the case rating, or hydrostatic pressure. This usually requires very thick flange sections, held together with numerous large highly stressed studs. Casing contours of horizontally split cast cases often contain bulges and indentations at nozzle and volute sections and around studs. A balance must be achieved between the aerodynamic requirements on the inside and the mechanical and maintenance requirements on the outside. This gives rise to difficult shapes and resulting stress concentrations that must be recognized and accommodated.

Typical materials used in the construction of horizontally split cases are listed in API 617 and include:

	Material	Application Range (°F)
Cast iron	ASTM A278	−50 to 450
Ductile iron	ASTM A395	−20 to 500
Cast steel	ASTM A216	−20 to 750
	ASTM A352	−175 to 650
Fabricated steel	ASTM A516	−50 to 650
	ASTM A203	−160 to 650

Lower-temperature services often use high-nickel-content materials such as ASTM A296.

Typical bolting materials for split flanges include ASTM A307 grade B for cast iron casings and ASTM A193 grade B7 for cast and fabricated steel casings. Nuts are typically supplied per ASTM A194 grade 2H. For low temperatures, ASTM A320 bolting is usually supplied.

The most difficult area of design for a vertically split case is usually the overhang outboard of the head shear ring. The pressure inside the case tends to swell the case in the middle, causing the overhung ends to deflect inward. At the same time, the pressure on the head enclosure results in a force on the shear ring that tries to deflect the overhung end outward. The stress concentration effect of the angular shear-ring groove aggravates the condition. These considerations usually make necessary a finite element analysis of the area before final design details are established.

The casing heads are also typically subjected to a finite element analysis; it is obviously important to control deflections. Efforts to apply ASME formulas intended for simplified flat head design can lead to erroneous results because these formulas are just not applicable to typical compressor head shapes.

A manufacturer has to have confidence that casing and head deflections can be accurately predicted; the manufacturer must be certain that the compressor design will perform

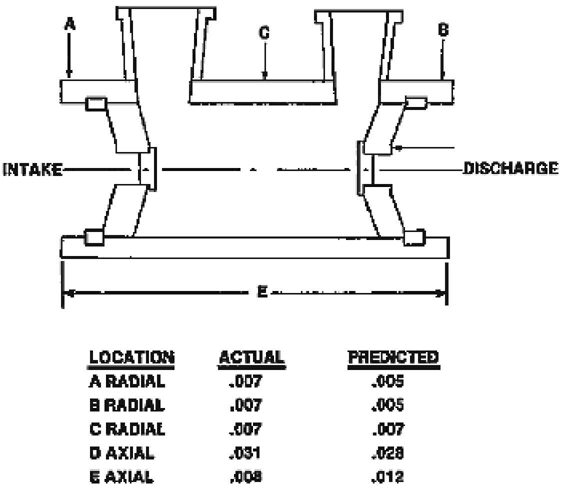

LOCATION	ACTUAL	PREDICTED
A RADIAL	.007	.005
B RADIAL	.007	.005
C RADIAL	.007	.007
D AXIAL	.031	.028
E AXIAL	.008	.012

FIGURE 12.73 Dial indicators measure key areas of a compressor on the manufacturing floor. *(Dresser-Rand Company, Olean, N.Y.)*

as intended. Excessive or unexpected movements can distort the case, cause tilting of a head that can lead to excessive runout between the thrust bearing and thrust disk, and cause gas leaks both internal to the machine (recycle) and/or through a case seal. This concern leads to strain gauge and dial indicator measurements of various cases and heads during pressure testing. These data are compared with predictions in a continuing effort to update and improve the analytical tools. As an example, Fig. 12.73 shows the location of dial indicators on key areas of a medium-sized propane compressor and compares predicted (based on finite element analysis) and actual deformations, thus serving to verify the analysis.

Typical materials for vertically split casings include:

	Material	Application Range (°F)
Welded	ASTM A516	−50 to 650
	ASTM A203	−160 to 650
Forged	ASTM A266	−20 to 650

Again, lower temperatures are possible with high-nickel-content materials. Pressure containing heads are designed from:

	Material	Application Range (°F)
Cast steel	ASTM A216	−20 to 750
	ASTM A352	−175 to 650
Plate	ASTM A516	−50 to 650
Forged	ASTM A266	−20 to 650
	ASTM A350	−150 to 650

Shear and retainer rings are usually from similar material.

A generalized pressure and flow chart is shown in Fig. 12.74. Comparison with Fig. 12.3 will demonstrate that specific capacity and pressure steps vary from manufacturer to manufacturer. The pressure capability of horizontally split designs is limited to approximately 1000 psi because of the practical problems of sealing a split at higher pressure levels with associated increased distortion.

High-pressure compressors may be defined as those operating over 1000 psi, and these fall in the vertically split category. Equipment of this type is used in applications such as ammonia and methanol synthesis gas, CO_2 for urea, as well as natural gas storage, gas lift, and reinjection. Figure 12.75 shows how these ratings have grown over the years as the market changed. Reinjection now accounts for the highest-pressure installations in the world. To

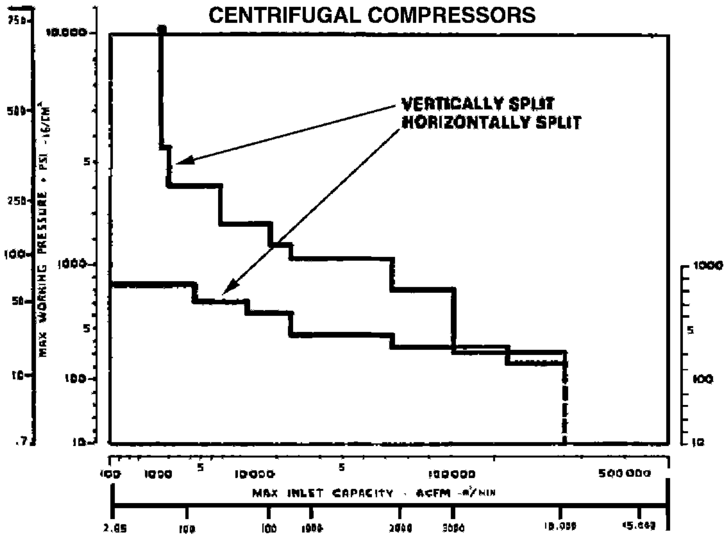

FIGURE 12.74 Generalized pressure and flow capacity chart. *(Dresser-Rand Company, Olean, N.Y.)*

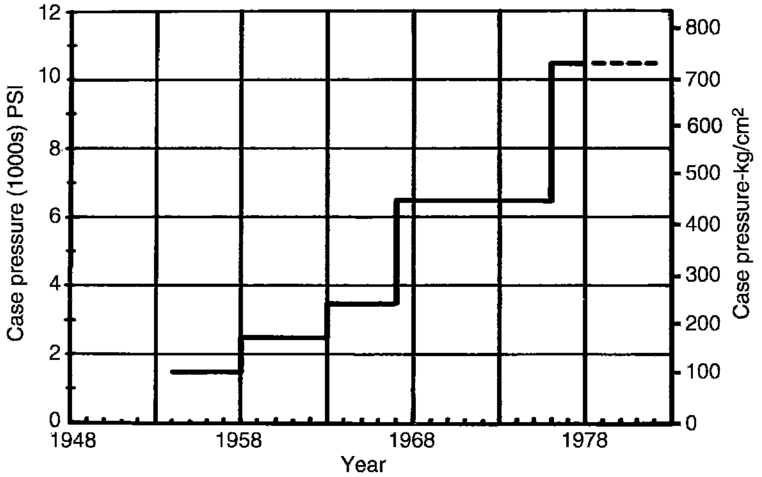

FIGURE 12.75 Pressure growth chart. *(Dresser-Rand Company, Olean, N.Y.)*

date, centrifugal compressors have been proven at 10,500 psi, and even this can be extended when the design is needed.

Figure 12.13 illustrates a typical high-pressure compressor. This particular one has eight impeller stages in a back-to-back arrangement. This design provides essentially a balanced thrust force condition that under most circumstances eliminates the need for a balance piston. The casing and heads are steel forgings, and the heads are retained by shear rings. Process pipe connections at inlet and discharge connections are made by machining flat areas on the casing and attaching flanges by means of stud bolts mounted in the case.

As discussed in Section 12.5, the choice between a straight-through design and a back-to-back arrangement for high-pressure applications is one of design philosophy. The back-to-back design is subject to the adverse effect of section mismatching. High-thrust loads can occur during operation at excessively high flow, or *stonewall*, because of loss of the second-section pressure ratio. But this is an off-design operating condition problem that can be prevented by controls or proper operation. Compressor thrust bearing failures caused by balance piston seal deterioration in high-pressure, straight-through machines point to a design or operating condition problem; these are more difficult to monitor and prevent.

The advantages of a back-to-back arrangement in a high-pressure case include:

- The aforementioned elimination of potential thrust bearing failure due to failure of the large-diameter balance piston labyrinth. (Balance piston labyrinths in straight-through designs are required to withstand differential pressures as high as 5000 psi.)
- Reduction of recirculation losses in the compressor since:
  a. The pressure led to the seals and balanced to the compressor suction is an intermediate pressure, as opposed to full discharge pressure on straight-through flow designs.
  b. Seals balanced to suction can have much smaller diameters (and therefore a much smaller flow clearance area) than those of balance piston labyrinths on straight-through flow designs.
  c. If the low-pressure section feeds contaminated gas into a scrubber or other purifier and the *cleaned* gas subsequently enters the higher-pressure section, internal gas leakage will go from the clean section to the contaminated section: The contaminated gas cannot leak into the clean gas.

High-capacity compressors may be defined as those operating at over 35,000 cfm inlet capacity. Two major petrochemical plants that use these large-capacity machines are ethylene plants and liquefied natural gas production facilities.

Figure 12.76 shows a typical large refrigeration compressor. These compressors handle gases such as propylene and propane. Fairly stringent requirements influence the selection of equipment for this service. Cases are usually designed with materials suitable for −40 to −50°F.

The ethylene compressor is still relatively small, even for the largest ethylene plants. It is usually handled in a medium-sized case. The gas is sweet and clean and the pressures are moderate. A key design consideration is the selection of materials for very low temperature, approximately −150°F.

Traditionally, for pressure ranges that offer a choice, the market has preferred the horizontally split machine from the viewpoint of maintenance. Most often, with steam turbine or electric motor drivers, the compressor and driver will be mounted on a mezzanine. Nozzles are directed downward, and the upper half of the case can be removed relatively easily, exposing all internals. The horizontally split case is still the preferred choice for

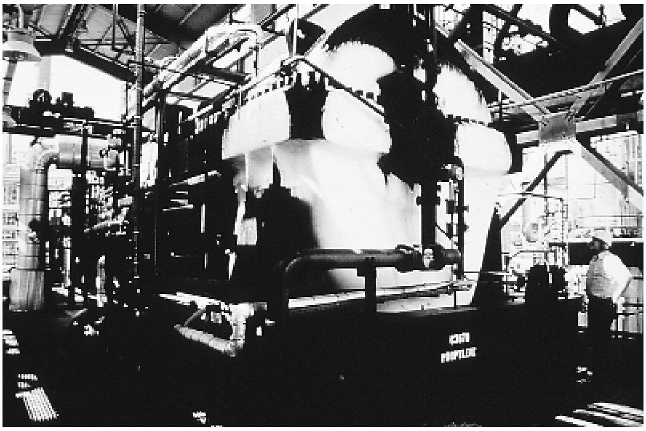

FIGURE 12.76 Large refrigeration compressor. *(Dresser-Rand Company, Olean, N.Y.)*

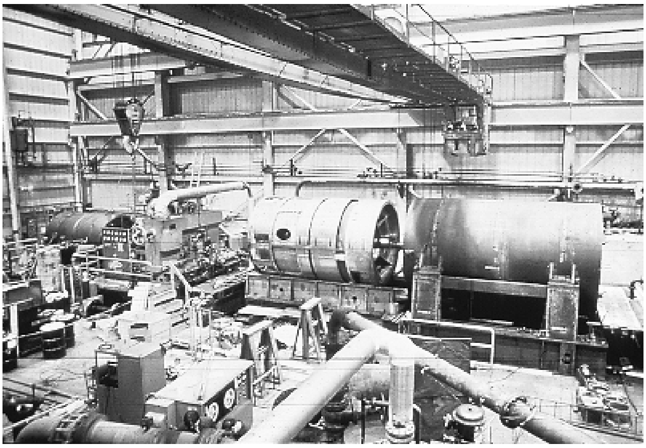

FIGURE 12.77 Assembly and maintenance procedure for a vertically (radially) split compressor casing. *(Dresser-Rand Company, Olean, N.Y.)*

through-drive applications. Here, room does not normally exist at either end of the case to extract a bundle. In recent years, there has been a trend toward vertically split compressors (Fig. II.4) for high-capacity applications. This is especially true with gas turbine drivers, where the compressors and gas turbines are located at grade level. The gas connections for the compressors are then located at the top of the case. If horizontally split units were selected, it would be necessary to dismantle the gas piping before removing the upper half. This is not necessary with a vertically split case because the internals are withdrawn axially from the end of the case (Fig. 12.77).

When lifting capabilities are limited and crane capacity does not allow removal of the upper casing half, vertically split compressors are also preferred. After the internal assembly is removed from the casing, the upper half of the bundle assembly can be dismantled by removing throughbolts and removing one section at a time (Fig. 12.78), thus dramatically reducing crane requirements. Alternatively, the bundle top half can be removed in a single lift (Fig. 12.79).

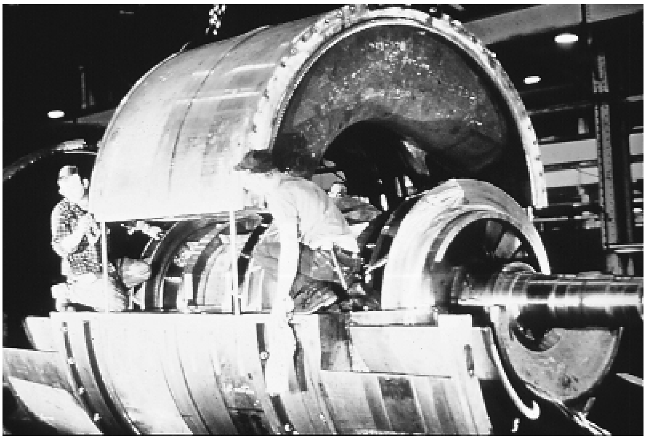

FIGURE 12.78 Vertically split compressor being dismantled. *(Dresser-Rand Company, Olean, N.Y.)*

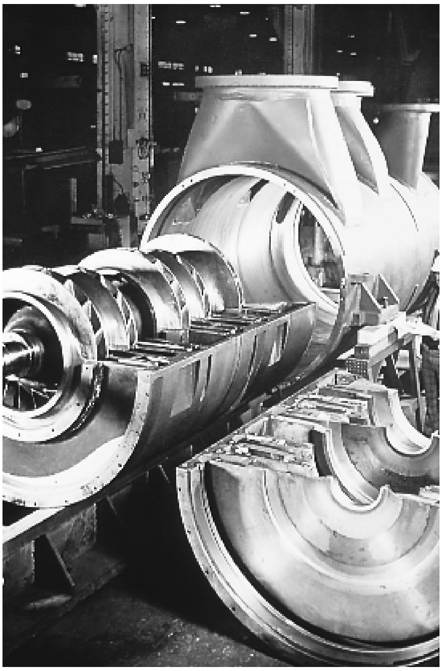

FIGURE 12.79 Removal of the bundle top half of a vertically split compressor. *(Dresser-Rand Company, Olean, N.Y.)*

The typical vertically split casing design incorporates many features to ease the installation and removal of the internal assembly. The case internal diameter is machined (Fig. 12.80) in a series of steps, the largest diameter being at the maintenance end. It is designed so that when the bundle is installed, it is only in the last inch or two of travel that the bundle rises onto its locating fits and O-ring lands. Ramps are machined into the case for guiding these pieces. For very corrosive services, stainless steel lands are welded into the case inside diameter at all locations of contact between bundle and case. The intent here is to reduce corrosion and to facilitate disassembly.

For medium-sized and large compressors, adjustable rollers (Fig. 12.81) are designed into the bundle outside diameter at several positions along its length to permit easier travel along the case and support cradle. For down-connected cases, with large holes in the bottom of the case, ribs are provided across the nozzle openings in the line of roller travel. This design feature prevents the bundle rollers from losing contact.

Cast compressor casings are usually provided with integral feet, two at the suction end and either one centered at the discharge end or two located at the sides (Fig. 12.81). The feet must

FIGURE 12.80 Compressor casing bore. *(Dresser-Rand Company, Olean, N.Y.)*

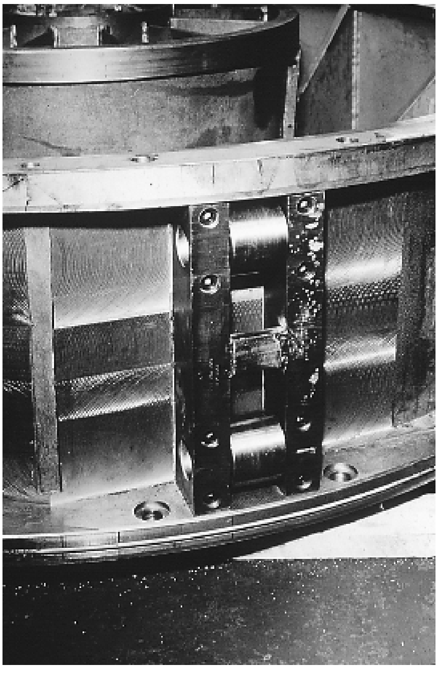

FIGURE 12.81 Adjustable rollers facilitate bundle installation. *(Dresser-Rand Company, Olean, N.Y.)*

hold the case firmly, yet permit thermal expansion. The case is typically doweled at the suction end feet, which, incidentally, is the end of the case where the thrust bearing is usually located. This allows case and rotor to grow thermally and expand in the same direction. If the discharge end is supported solely in the middle, the support may take the form of a *wobble plate* (see Fig. 12.97). These plates are kept thin to permit deflection without excessive stress. As supported weights increase, additional thin plates are added, parallel to the first. When the weight capacity of this design is exceeded, it is customary to provide two discharge end supports, one at each side of the case, called *sliding feet.* These feet typically rest on a PTFE (Teflon) pad with clearance provided around the bolting to permit travel in the axial direction.

The dowels and bolting anchoring the case are designed to withstand all reasonable piping forces and moments and torque requirements. Case and nozzle thicknesses are rarely affected by piping loads. On U.S.-built compressors, these sections are very conservatively stressed, as shown previously.

12.8 CASING MANUFACTURING TECHNIQUES

The typical line of cast cases being offered by world-scale manufacturers includes cast iron and cast steel designs to satisfy market needs. The choice of materials for a given application is a function of several variables, including pressure and gas characteristics, as pointed out in API 617. Cast iron and cast steel each require their own supply of patterns, because shrinkage rates vary significantly between the materials. The decision to offer a complete line of machines can prove expensive for a manufacturer because of the quantity and complexity of patterns that must be built and maintained. Case variations are numerous, such as cast iron versus cast steel, standard-flow models versus high-volume reduction stepped cases, straight-through and double-flow configurations, nozzle connections up or down, various sizes of sidestream connections up or down connected at various axial locations in the case, and different-sized compound connections with different orientations. All of these special items require different patterns or pattern sections.

The majority of cast cases are split horizontally as shown in Fig. 12.82. Bearing chambers may be cast integral with the case; the case would provide integral bearing supports.

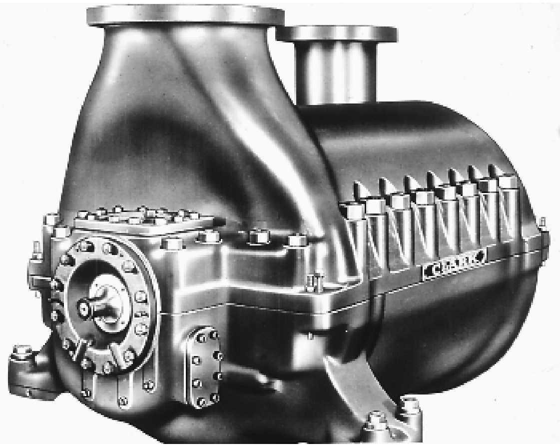

FIGURE 12.82 Centrifugal compressor with a cast casing. *(Dresser-Rand Company, Olean, N.Y.)*

This design ensures permanent built-in alignment, provided that the case is machined in one piece. Other arrangements involve bolted-on bearings.

Once the case is released from the foundry, the typical manufacturing sequence requires rough machining of the split surfaces to within a fraction of an inch of finish. Next, the sequence progresses to layout and rough machining of the inside contours and fits, welding on the case drains (cast steel only), complete stress relief, finish machining of the splits, and finish boring of the internal diameters. Return bends are generally machined integral with the case. Split-line bolting may be somewhat indented between the return bends to minimize the distance off the centerline.

Casing integrity is verified by hydrostatically testing to 1.5 times the casing design pressure. Casing splits are a metal-to-metal fit-up and generally sealed with the aid of room-temperature vulcanizing joint compound. Split-line bolting, stressed to prescribed values, pulls the casing halves together.

Fabricated case construction, an example of which is shown in Fig. 12.83, is used on the larger-capacity medium- and low-pressure vertically split and horizontally split compressors. Advanced manufacturing and welding techniques, which can vary somewhat from manufacturer to manufacturer, are used in the production of these cases. Steel plate and forgings are used.

The nozzles may be cast or may be formed from plate. The fabricated design is such that the transition from a rectangular shape (for the connection to the case) to a cylindrical shape is done by straight-line brake bending (Fig. 12.84). Very large nozzles are made from four separate pieces which are welded together (Fig. 12.85). The concept of straight-line seams is used to simplify the joining, allowing automatic submerged arc welding (Fig. 12.86). Forged steel flanges are welded to these nozzle bodies (Fig. 12.87) to complete the assembly. Again, this is done by the automatic submerged arc welding method.

The case cylinders (Fig. 12.88) are rolled from steel plate and welded along the longitudinal axis. The nozzles are then positioned and welded in place (Fig. 12.89). For long or stepped cases, two cylinders, one for the inlet end and one for the discharge end, are joined with a girth weld. To make this weld, the case is rotated on a special machine, and the submerged arc welding fixture is held stationary (Fig. 12.90).

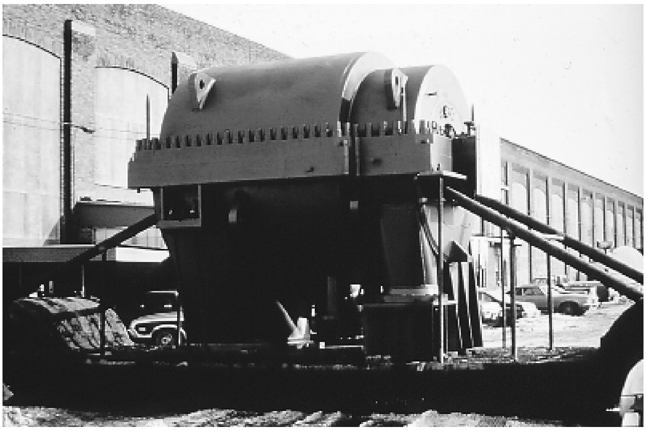

FIGURE 12.83 Centrifugal compressor with a fabricated casing. *(Dresser-Rand Company, Olean, N.Y.)*

FIGURE 12.84 Straight-line brake bending produces a cylindrical casing contour. *(Dresser-Rand Company, Olean, N.Y.)*

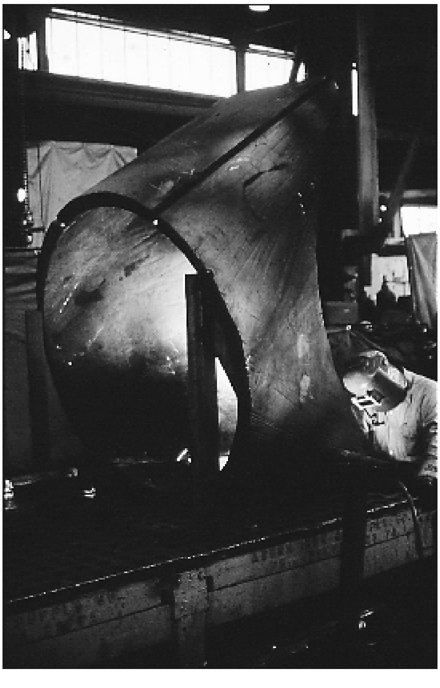

FIGURE 12.85 Nozzle welding in progress. *(Dresser-Rand Company, Olean, N.Y.)*

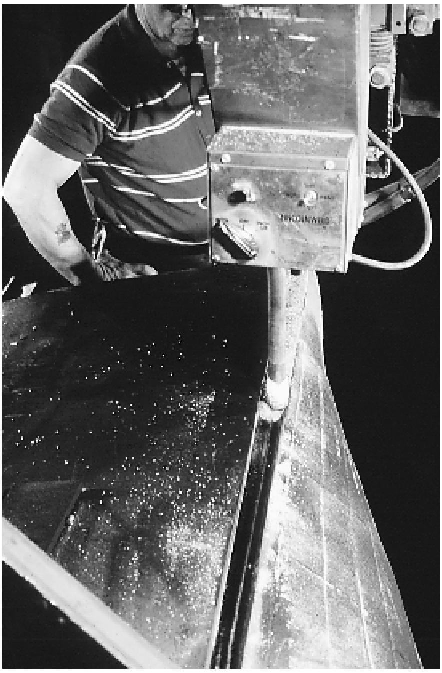

FIGURE 12.86 Automatic submerged arc welding. *(Dresser-Rand Company, Olean, N.Y.)*

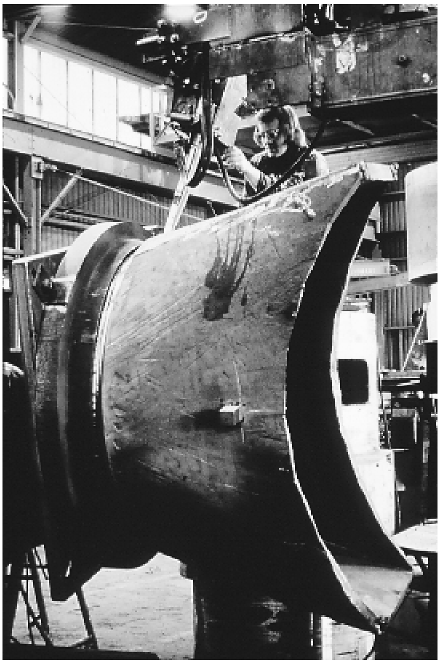

FIGURE 12.87 Forged steel flanges being welded to nozzle bodies. *(Dresser-Rand Company, Olean, N.Y.)*

FIGURE 12.88 Casing cylinder. *(Dresser-Rand Company, Olean, N.Y.)*

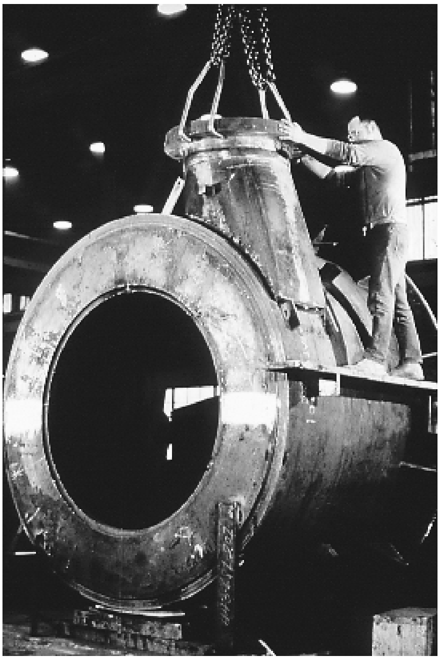

FIGURE 12.89 Nozzle positioning and welding. *(Dresser-Rand Company, Olean, N.Y.)*

The procedure thus far is the same for either a horizontally or vertically split case. If the case is split horizontally, the next step is to split the case longitudinally into two halves (Fig. 12.91). A split flange is burned out of thick plate (Fig. 12.92) and welded to each half. Return bend sections may be formed from steel plate and attached to the case by continuous structural welding to create a rib effect that provides additional stiffness to the case (Fig. 12.93).

The casings, assembled as described, are then rough-machined, heat-treated for stress relief (Fig. 12.94), and finish-machined (Fig. 12.95). Figure 12.96 shows a completed horizontally split fabricated compressor with the top half removed. Note the variation in impeller stage spacing. The large spaces allow for large-capacity sidestream entries.

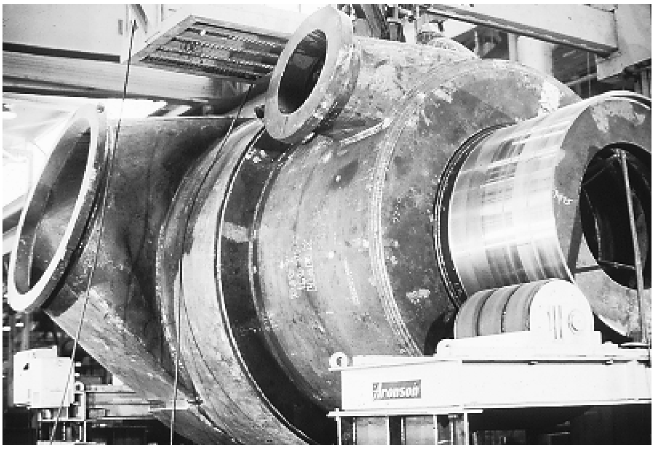

FIGURE 12.90 Case rotation fixturing and girth welding. *(Dresser-Rand Company, Olean, N.Y.)*

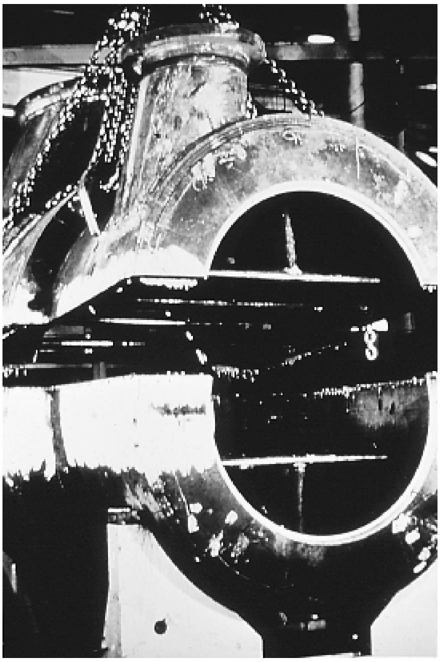

FIGURE 12.91 Longitudinal splitting of a compressor casing. *(Dresser-Rand Company, Olean, N.Y.)*

Figure 12.97 shows a completed compressor.

During manufacturing, the fabricated steel cases undergo quality assurance inspections such as:

1. All pressure welds are subject to 100% magnetic particle inspection of:
   a. Plate edges prior to welding
   b. Weld root pass
   c. Finish welds before and after stress relief

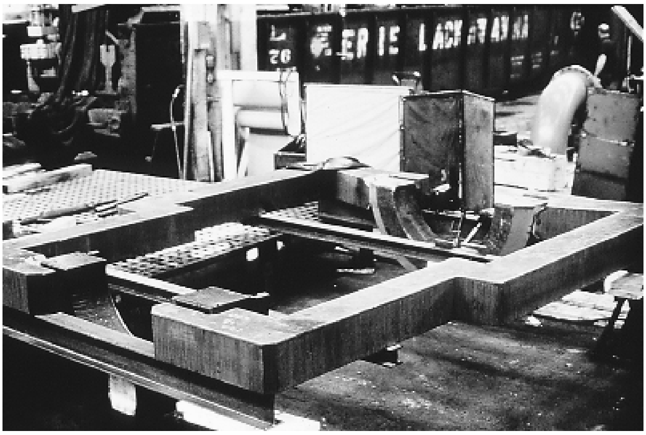

FIGURE 12.92 Flange production from a thick plate. *(Dresser-Rand Company, Olean, N.Y.)*

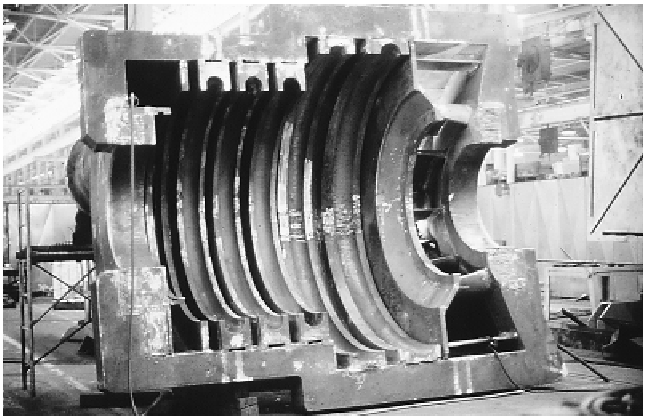

FIGURE 12.93 Attaching a return bend section to a compressor casing. *(Dresser-Rand Company, Olean, N.Y.)*

2. Structural welds are subject to 100% magnetic particle inspection of:
   a. Internal parts before stress relief
   b. External parts before and after stress relief
3. For design temperatures below −20°F (−29°C), impact tests of base material and weld metal are taken as part of the weld procedure qualification.
4. Hydrotest is done to 1.5 times the maximum working pressure.

Small high-pressure vertically split cases are often manufactured from forgings. This becomes a requirement when thicknesses become too great to roll from plate. Some of these cases are 10 to 12 in. thick to contain the high pressures. Nozzles are sometimes cast separately and welded to the case, but for very high pressure applications the process pipe connections are made by machining flat areas on the casing and installing studs for flanges.

Typical manufacturing techniques follow those established for the other casing types (i.e., rough machine, stress relief, and finish machine). Inspection procedures closely follow those for welded steel cases.

FIGURE 12.94 Heat treatment of a welded casing. *(Dresser-Rand Company, Olean, N.Y.)*

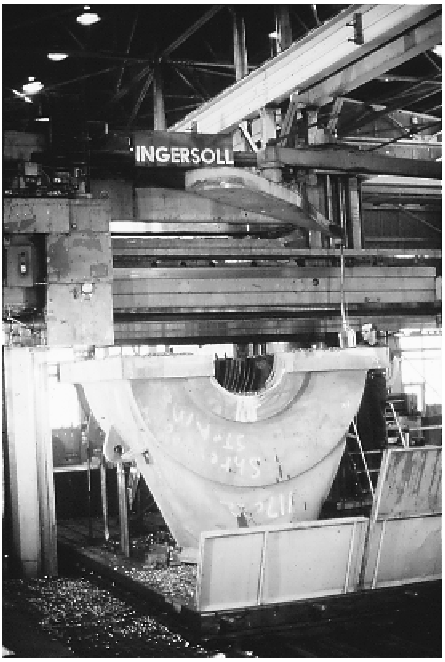

FIGURE 12.95 Finish machining in progress. *(Dresser-Rand Company, Olean, N.Y.)*

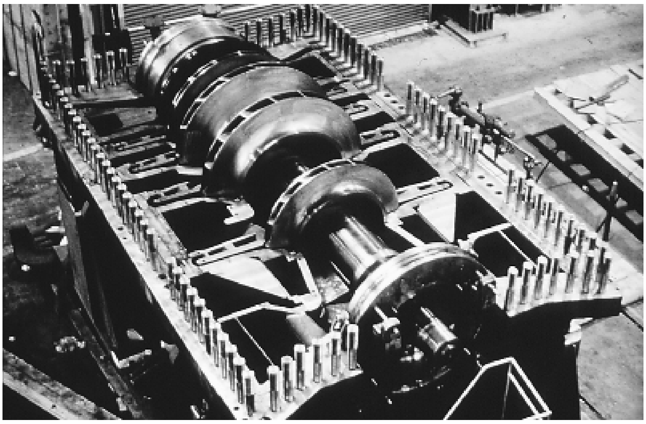

FIGURE 12.96 Horizontally split fabricated compressor, lower casing half. *(Dresser-Rand Company, Olean, N.Y.)*

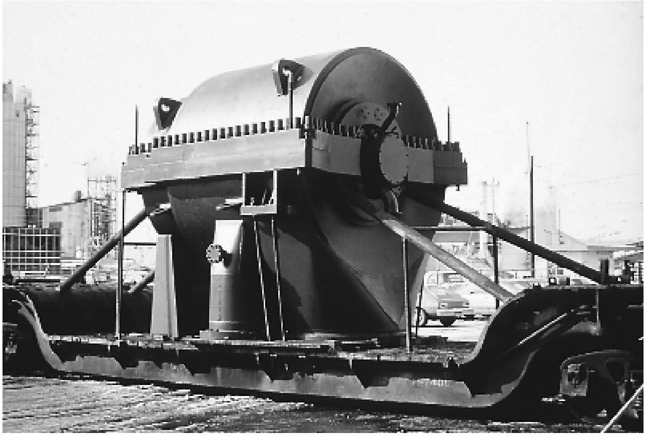

FIGURE 12.97 Completed fabricated compressor. *(Dresser-Rand Company, Olean, N.Y.)*

12.9 STAGE DESIGN CONSIDERATIONS

The most important element in a centrifugal compressor is the impeller. It is by way of the impeller that the work introduced at the compressor shaft end is transferred to the gas. The treatment the gas receives both before and after the impeller is also important. Typically, a guide vane directs the flow to the impeller, and a diffuser return bend and return channel (diaphragm) are downstream of the impeller (Fig. 12.98). Collectively, these parts make up a compressor *stage.* Some of the design considerations involved with these components are discussed in this section.

Individual impeller designs are related and evaluated by a parameter called *specific speed*, which classifies impellers based on similarity of design, such as angles and proportions. Although this was explained earlier in the book, a bit of amplification may be of interest to the reader.

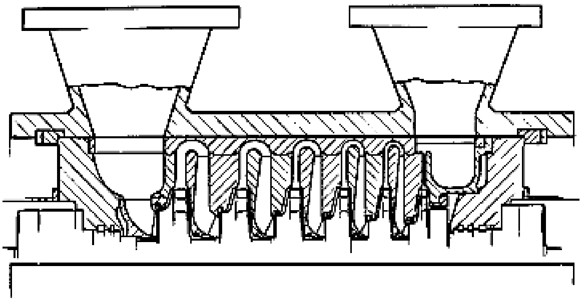

FIGURE 12.98 Stationary gas passages making up six stages. *(Dresser-Rand Company, Olean, N.Y.)*

Specific Speed One aspect of similarity is called *kinematic similarity,* where velocity ratios between two respective points within two separate designs are the same. For example, if a particular location velocity V as compared to the tip velocity U is constant between two different impellers and this is satisfied throughout the flow field, kinematic similarity is satisfied. Substituting for the velocity V, the capacity Q divided by the diameter D squared, and substituting for the tip speed U, the speed N times the diameter D, results in Q/ND^3, referred to as the *flow coefficient.* This is also referred to as a *capacity coefficient.* It represents the velocity similarities between two designs.

$$\frac{V}{U} = \frac{Q/D^2}{ND} = \frac{Q}{ND^3} = \text{constant} \Rightarrow \text{flow coefficient} \tag{12.1}$$

The second aspect of similarity is called *dynamic similarity.* Designs are considered to be similar if the forces and the pressure fields are proportional to each other. This similarity is expressed by the pressure coefficient, which is defined as head H divided by tip speed U squared.

$$\frac{H}{U^2} = \text{constant} \Rightarrow \text{pressure coefficient} \tag{12.2}$$

These two elements are combined to form specific speed. As can be seen, only operating parameters remain: speed, volume, and head.

$$\begin{aligned} N_S &= \int\left(\frac{Q}{ND^3}; \frac{H}{U^2}\right) \\ &= \int\left(\frac{Q}{ND^3}; \frac{H}{N^2D^2}\right) \\ &= \frac{\left(Q/ND^3\right)^{1/2}}{\left(H/N^2D^2\right)^{3/4}} \\ &= \frac{N(Q)^{1/2}}{H^{3/4}} \end{aligned} \tag{12.3}$$

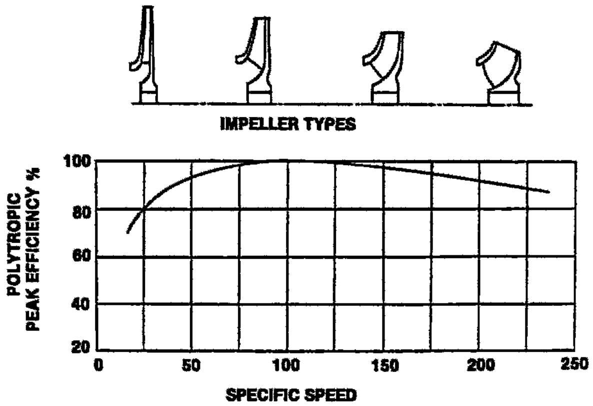

FIGURE 12.99 Efficiency and specific speed correlation based on shop tests. *(Dresser-Rand Company, Olean, N.Y.)*

where N_S = specific speed

Q = actual flow, actual ft^3/s

N = speed, rpm

H = head, ft-lb/lb

D = diameter, in.

U = tip speed, ft/min

The specific speed can be used in two ways. First, in application of equipment, it points out where the impeller is operating relative to previous experience. The second important use is the correlation between stage efficiency and specific speed. Such a correlation exists, as shown in Fig. 12.99, based on test data. Also shown is the approximate shape of the impellers in their respective specific speed area.

For any particular compressor frame size, there must exist a range of available impellers to satisfy the flow and head requirements. They may typically cover a range of specific speeds from approximately 20 to over 200. Designs on the order of 200 to 300 have been appearing in recent years because of a trend in gas transmission services of decreased head requirements and increased capacity levels. As stated before, impeller geometry changes with specific speed. One can see the pattern of change in straight-through compressors of numerous stages.

It is worth looking at some general considerations, such as radial versus backward bent blading, blade entrance angles, and impeller blade shapes. Radial-bladed impellers produce the most head but exhibit a reduced range of operation with reduced stability compared to that achievable through backward leaning of the blades. It is for this reason that most centrifugal impellers have backward-leaning blades, generally at angles of approximately 40 to 50°. This inclination has been found to produce a good balance between head and operating range.

The design flow for a particular impeller is determined by the blade entrance angle at the eye; this is illustrated in Fig. 12.100. At the inlet, in the stationary coordinate system, the velocity magnitude and direction are represented by C_{M1}. In the relative system, rotating with the blade at its velocity, the flow approaches in the direction and magnitude of W_1. The design point of a stage represents optimum efficiency; it occurs when the vector W_1 is in

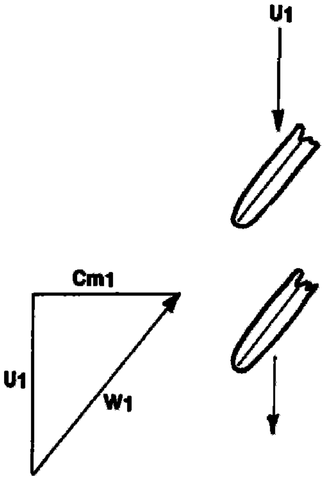

FIGURE 12.100 Impeller inlet diagram. *(Dresser-Rand Company, Olean, N.Y.)*

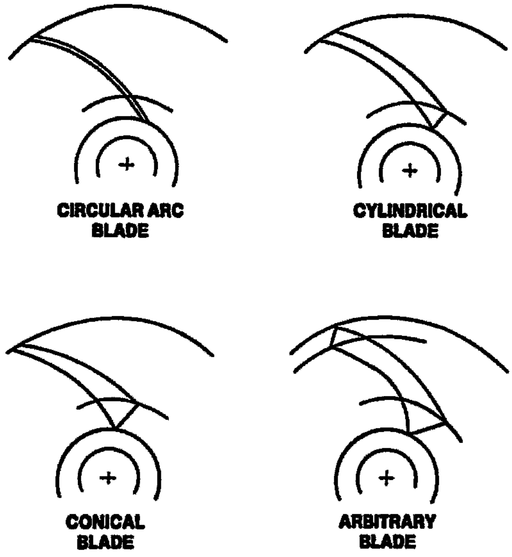

FIGURE 12.101 Impeller blade shape choices. *(Dresser-Rand Company, Olean, N.Y.)*

line with the blade angle. Since velocities across the impeller inlet eye can vary because of the turning of the flow, the blade angle must also vary across the eye to accommodate this requirement.

As the throughflow velocity C_{M1} increases or decreases, the efficiency drops, primarily because of the positive or negative angle of incidence at the leading edge. Selections are usually made within 5% of the design flow.

The level and shape of the impeller pressure coefficient curve is a function of velocity triangles at the discharge of the impeller. The more backward the blade is bent, the lower the pressure coefficient and the higher the rise to surge.

Several types of impeller blading can be chosen for a particular design requirement, and some are shown in Fig. 12.101. At top left is a circular arc blade that is oriented in the axial direction. At top right is a three-dimensional blade shape generated on the surface of an inclined cylinder. At bottom left, we depict a three-dimensional blade shape generated on a conical shape. Finally, at bottom right is a completely arbitrary blade shape. The complexity and manufacturing difficulty of these shapes increases in the order mentioned. The choice is made on the basis of satisfying the aerodynamic requirements. If more than one type of blade is satisfactory, the least complex design is selected.

Blade thicknesses are determined by a stress criterion, because the blades must hold the cover to the disk for the typical closed design at the frame speeds desired. Moreover, the blades have to be structurally sound.

The largest flow impellers for a particular frame size are of the open type, with no attached cover, as shown in Fig. 12.39. Radial blading and elimination of a cover on this particular design provide for a maximum amount of flow and head in one stage, yet keep stress levels sufficiently low, even in large diameters, to allow acceptance of maximum material yield point criteria as specified for H_2S service. Note that API 617 stipulates the use of 90,000 psi maximum yield strength, RC-22 hardness (235 BHN) steels. For ease of manufacturing, the minimum yield strength of carbon steels generally applied in H_2S service is 80,000 psi.

Open impeller blades can be backward curved if desired, with some sacrifice to head and special consideration to blade stresses. The typical open impeller has an almost axial inlet section, referred to as an inducer section. This impeller is typically used in the first stage and requires more axial space than the smaller designs. The primary advantages of this design are higher flow and pressure ratios, with some sacrifice to stability and efficiency. The impeller is designed to run with generous clearances (approximately $\frac{1}{8}$ in. for a 40-in.-diameter impeller) between its periphery and the stationary shroud. It is industry practice to provide one or two stages of backward-curved impellers behind this radial flow impeller to produce a rise to the surge performance characteristic in a given section.

A variation of the open impeller design is to equip it with a cover. Some gain is made in efficiency, but the attached cover increases the stresses and lowers the maximum speed capability significantly.

The typical welded-closed impeller used in the vast majority of applications is one of three designs: three-D welded, three-piece welded, or two-piece (milled-welded) construction. The three-D welded (three-dimensional) has a blade shape that is a portion of a rolled conical or cylindrical surface, or may be a combination of the two. An example is shown in Fig. 12.102. These blades are positioned on the disk or cover at a predetermined inclination and location. The blades then form a three-dimensional contour with respect to the cover or disk.

The choice of cone or cylinder size, location, and inclination to satisfy the aerodynamically required angles at the leading and trailing edges of the blade is difficult. In the past, it was not unusual for a design drafter to spend several weeks trying different combinations before arriving at a satisfactory geometry. Use of the computer has reduced this time to minutes, which allows the designing of more than one blade for review and detailed analysis.

The basic advantage of three-dimensional impellers is better performance, with higher efficiency. However, material, tooling, and welding requirements are higher than with other closed impellers. They also require more axial space in the machine.

The three-piece design (Fig. 12.103) is the next step down in complexity. This type of impeller also has three basic components: blades, cover, and disk, welded together. This construction allows more freedom for aerodynamic design than does the milled-welded impeller design that follows. The blades, however, do not form a true three-dimensional contour. Instead, they are rolled into a circular shape. The impeller requires less axial spacing than the three-D type discussed earlier and is less complex to manufacture.

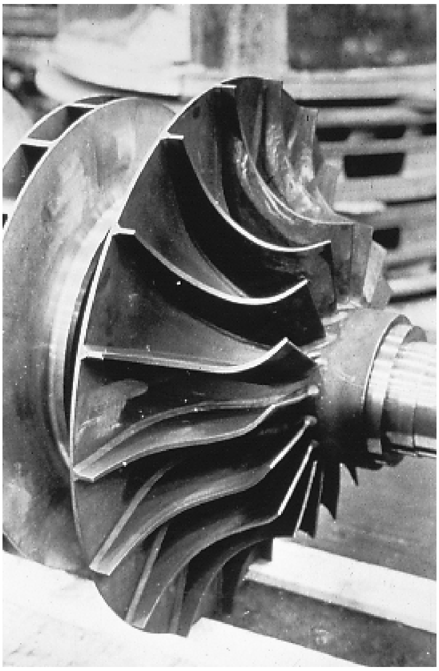

FIGURE 12.102 Three-dimensional, welded impeller. *(Dresser-Rand Company, Olean, N.Y.)*

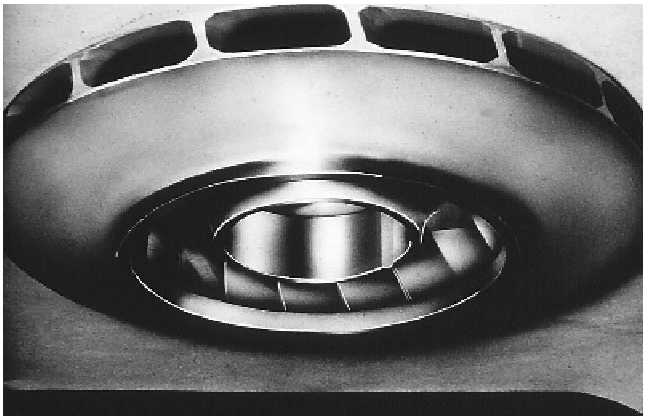

FIGURE 12.103 Three-piece impeller design. *(Dresser-Rand Company, Olean, N.Y.)*

The two-piece impeller (Fig. 12.104) has the blades milled onto the disk or cover and therefore requires welding on one side only. This type of impeller also has good efficiency and requires a minimum of stage spacing. The two-piece impeller therefore combines the features of good performance and ease of manufacturing. Figure 12.105 gives an idea of the range of impeller sizes available. The large rotor is from a large refrigeration machine, and the small rotor is typical of high-pressure services such as gas injection.

Once the flow channel through the impeller is set, the blade, disk, and cover contours and thicknesses must be developed consistent with the anticipated speed. Welded impellers are sufficiently complex to mandate computer-based stress and deflection analyses. A manufacturer's stress programs are typically backed up by extensive testing of prototype and/or

FIGURE 12.104 Two-piece impeller with integrally milled blades. *(Dresser-Rand Company, Olean, N.Y.)*

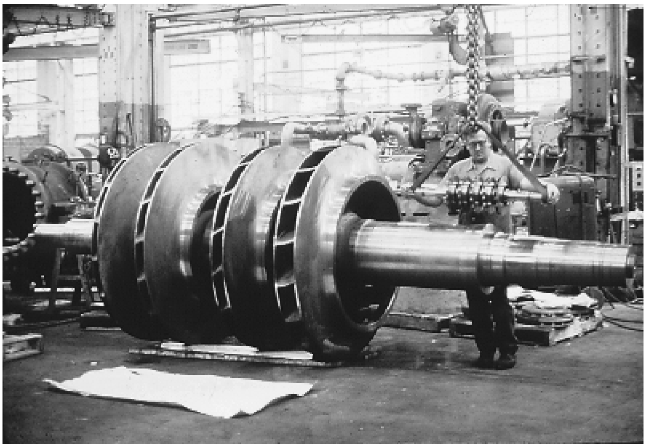

FIGURE 12.105 Range of impeller sizes typically available. *(Dresser-Rand Company, Olean, N.Y.)*

production impellers using strain gauges, proximity probe measurements of elastic deformations, stress coat and photo stress techniques for studying stress patterns, and overspeed-to-destruction tests.

From both the experimental and analytical investigations, the minimum strength requirements of welded impellers are determined, taking into account appropriate factors of safety. All impellers are heat treated per specifications developed through an engineering department, with acceptable physical property ranges targeted to cover yield and tensile strength, hardness, minimum elongation, and minimum reduction in area.

Typical strength levels used in impellers are as follows:

Material	Yield Strength Range (lb/in.^{2})
Alloy steel	80–145,000
403–410 stainless	70–135,000
17-4 PH stainless	125–170,000

We can now look at some considerations involved with the design of the other pieces that contribute to the stage, such as the guide vane, diffuser, return bend, and return channel, as depicted earlier in a six-stage compressor (Fig. 12.98). The efficiency of a given stage is a function of the friction and diffusion losses through the stage components. These loss mechanisms can be used to explain the shape of the efficiency versus specific speed curve (Fig. 12.99). Peak efficiency decreases as the specific speed is reduced or increased from an optimum range. This comes about as a result of the combined friction and diffusion losses reaching a minimum value.

Friction losses in a straight pipe are proportional to the velocity squared. The larger the pipe area, the lower the losses. Diffusion losses for areas that are changing are proportional to the velocity ratio $V_{\text{entrance}}/V_{\text{exit}}$ to the fourth power. Furthermore, losses are incurred by any bends and are proportional to the degree of turning and the tightness of the turn. The lesson in all this is that unnecessary diffusion and bending should be avoided in high-performance compressors.

Characteristically, friction losses increase at the lower specific speeds. This is due to the increased wetted surface and smaller hydraulic channel diameters. Diffusion, on the other hand, increases at the higher specific speeds, reflecting the effects of larger gas capacities being turned in tight bends. When the two losses are added, an area of minimum loss and maximum efficiency results, shown in Fig. 12.99.

The internal geometry of a compressor is more complicated than that of a bent or diffusing pipe. To calculate the velocities within a machine, a manufacturer may use advanced numerical solutions, whereby the geometry would be defined and the velocity fields that must satisfy radial equilibrium and continuity at every spatial point in the flow field would be calculated iteratively. Typically, for a compressor stage analysis, the velocity field from upstream of the impeller to upstream of the next stage impeller is analyzed.

To optimize the efficiency, the geometry of each component is reviewed in terms of velocity and velocity gradients. Unnecessary accelerations are eliminated and diffusion losses are minimized. The return bend radii are generous, the return channel contours are specially shaped, and the areas through the channel and guide vane are closely specified.

The velocity distributions for a final-stage geometry are shown in Fig. 12.106, from the trailing edge of one impeller to the leading edge of the subsequent impeller. The velocity

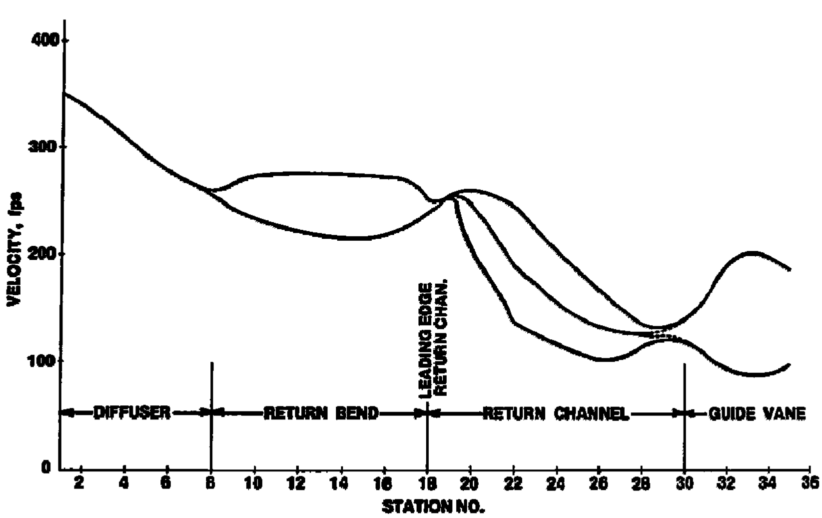

FIGURE 12.106 Velocity distributions for final-stage geometry. *(Dresser-Rand Company, Olean, N.Y.)*

decreases from the first impeller trailing edge through the vaneless diffuser in a uniform manner.

This is followed by the return bend, where the maximum velocities on the inner wall and the minimum velocities at the outer wall are proportional to the severity of the bend and the local surface curvatures. The diffusion losses on both surfaces have been minimized.

Following the return bend, the return channel velocities are shown. The mean velocity through the channel is represented by the middle line; the upper and lower velocities are those along the vane surfaces.

The return channel vanes are optimized. The vane shape, thickness distribution, and number of vanes are analyzed in conjunction with the channel axial height to arrive at the final coordinates.

Following the return channel is the guide vane, which turns the flow from radially inward flow to axial flow. This turning results in acceleration along the inner contour. Unnecessary accelerations and decelerations are carefully scrutinized and minimized.

Next is the impeller, which must be designed consistent with the approach velocities leaving the guide vane and, in turn, impart the energy increase to the fluid. The process repeats itself for as many stages as there are in the unit.

In summary, the velocity decreases in the diffuser downstream of the impeller, it is then turned from radially out to radially in, the tangential velocity or swirl is removed in the diaphragm or return channel, and finally, the flow is turned from the radial to the axial direction and enters the next impeller.

Inlet guide vanes, shown in Fig. 12.29, also provide one method of controlling stage performance, because they may be used to direct the flow into the impeller at different angles: against impeller rotation, radially, or with impeller rotation. The influence of various guide vane angles on a given impeller head characteristic is shown in Fig. 12.107.

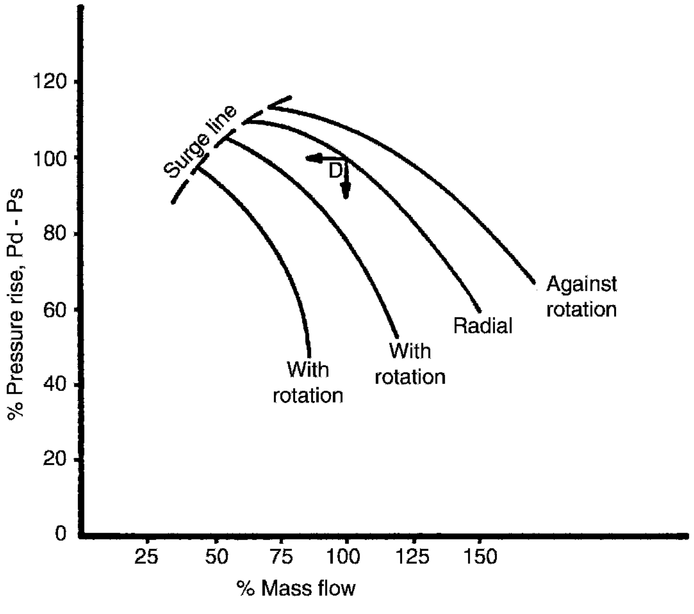

FIGURE 12.107 Guide vane angles vs. impeller head characteristics. *(Dresser-Rand Company, Olean, N.Y.)*

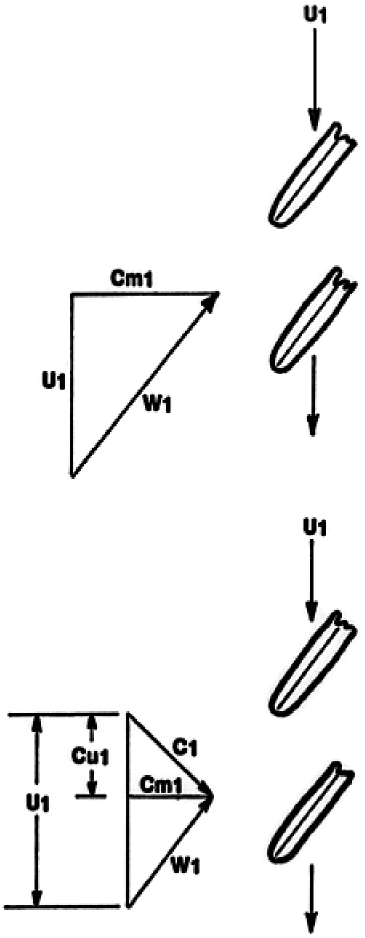

FIGURE 12.108 Impeller inlet diagram. *(Dresser-Rand Company, Olean, N.Y.)*

How this effect is caused is shown in the impeller inlet diagram (Fig. 12.108). When inlet tangential velocity or swirl exists because of turning guide vanes, the inlet triangle is modified. For a particular value of inlet tangential velocity, C_{U1}, there will be a through-flow velocity, C_{M1}, which will result in a good approach angle to the impeller blading. This is where the peak efficiency will occur.

12.10 IMPELLER MANUFACTURING TECHNIQUES

As mentioned in Section 12.5, the riveted impeller has been around for many years. There are two basic types of construction, one being two-piece with milled vanes; the other is three-piece with separate disk, cover, and blades.

Large-capacity impellers require three-piece construction (Fig. 12.103). The cover and disk are fabricated from forgings, usually of either alloy steel or a 400-series stainless. The blades are usually die-formed from stainless steel and are attached to the disk and cover by short stainless steel rivets extending through the disk or cover material and the flange provided along the blade by the forming.

FIGURE 12.109 Impeller undergoing semiautomatic welding. *(Dresser-Rand Company, Olean, N.Y.)*

Smaller-capacity impellers are of two-piece construction (Fig. 12.104), with vanes milled on either cover or disk piece. Disk and cover halves are jointed by long rivets that pass completely through the cover, the blade, and the disk. Flush riveting is achieved through the use of countersunk rivet holes. The outer surfaces are ground smooth.

For both types of construction, the pieces are typically purchased in the final heat-treated condition, with metallurgical and mechanical properties certified. They are completely machined and inspected, including a magnetic particle check, before joining. After assembly, the impeller typically undergoes balance, overspeed test, and additional final inspection, including magnetic particle and dimensional examination.

Cast impellers have also been used for some time. This technique is limited to designs that have high usage, thus justifying the typically high pattern costs. For this reason, cast impellers are not common in centrifugal process compressors, which are almost always custom designed for the application. The technique has been applied to some small impellers. However, there is obviously a practical limit to the narrowness of the flow channel.

Typically, the impellers can be made of any castable steel, including 400 series and 17-4 PH stainless steels. After the obligatory cleanup, they are heat-treated per the required specification. Bores and other surfaces are then machined as specified. Gas passage areas are essentially left untouched, aside from some possible hand-grinding or vibratory finish, if desired. Castings can be inspected or radiographed ultrasonically to verify soundness. The typical inspection process involves magnetic particle and dimensional checks before and after the balance and overspeed runs.

Welded impellers still account for the majority of impellers being designed and constructed. They are generally more rugged and will be more able to resist corrosion and erosion than riveted types. However, five-axis milling is making its mark and is often sought out for reasons of consistent quality and blade strength. Moreover, milled open impellers can be marginally more efficient than their various counterparts or competing configurations.

All materials for welded impellers, including the disks, blades, and covers, are supplied in the annealed condition, with appropriate material certifications. Pieces are preliminary-machined in preparation for welding. *Location welding*, or *tack welding*, is done by the inert gas-shielded metal-arc process (MIG). The completing welds are done by the same method used in a semiautomatic welding process (Fig. 12.109). The gas-shielded tungsten-arc (TIG) method is used at times for completing welds around blade ends.

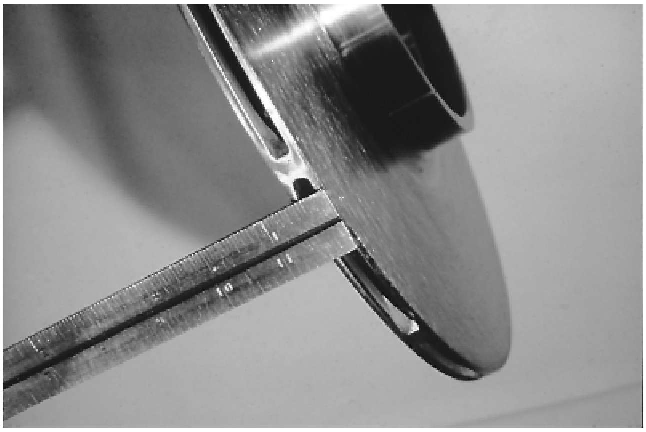

FIGURE 12.110 Narrow-width impeller. *(Dresser-Rand Company, Olean, N.Y.)*

Welding tables provide for proper preheat during the welding process. These tables are provided with heating elements in the table and cover to maintain material temperatures at approximately 600°F. The tables are mechanized to permit rotation of the workpiece under a stationary open flame, or torch.

Final mechanical properties are obtained by heat-treating (normalizing or quenching, with subsequent tempering) after welding. Typically, impellers then undergo final machining, dynamic balancing, and overspeed testing to at least 115% of maximum continuous speed, as specified in API 617.

The general manufacturing techniques used to produce the different types of welded impellers vary somewhat and will be looked at next. For a three-piece-construction impeller, the disk and cover are machined from forgings. The die-formed blades are then tack-welded to the cover with the use of locating fixtures. The final welding is a continuous fillet weld between the blade and cover. Subsequently, the blade cover assembly is joined to the disk by a continuous fillet weld between disk and blade.

An open impeller design consists of a disk and blades. The cover is eliminated. As discussed previously, this type of impeller is characterized by an inducer section that directs the gas flow into the eye of the impeller. The blades are either die formed or precision cast. The welding procedure is the same as for three-piece construction, with the final weld being a continuous fillet weld between the disk and blade. For two-piece construction, the blades are machined on either the disk or cover forging. The impeller is completed by a continuous fillet weld to the mating piece (disk or cover) around the entire blade interface.

The welding techniques described are limited to impellers with a flow channel width of more than $\frac{5}{8}$ in., to allow insertion of a torch. Increasing numbers of applications require the advantages of welded construction for impellers with channel widths of less than $\frac{5}{8}$ in. (Fig. 12.110). One method of doing this has been to weld through from the back side (Fig. 12.111). This type of impeller is manufactured from a disk forging and a cover forging, thus being of two-piece construction. Impeller blades, integral with the cover, are formed by removing metal from the inner face of the cover. A matching slot, corresponding to the blade contour, is machined in the disk at each blade location. After machining, the disk is located precisely over the cover with the blades aligned to the slots in the disk. The slot is then filled with a continuous multipass TIG weld (Fig. 12.112). An internal fillet is thus formed at the blade-to-disk junction. Using this technique, welded impellers with the

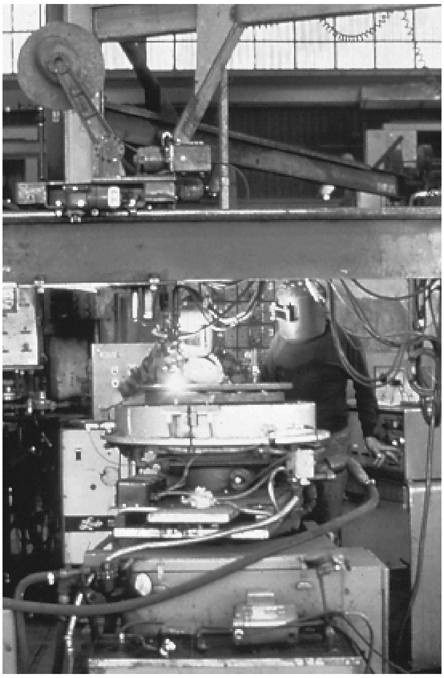

FIGURE 12.111 Slot welding a two-piece impeller. *(Dresser-Rand Company, Olean, N.Y.)*

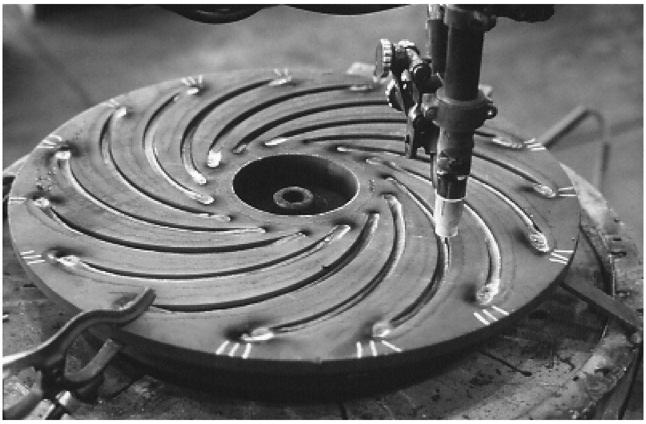

FIGURE 12.112 Slots in a disk being filled. *(Dresser-Rand Company, Olean, N.Y.)*

smallest practical channel width can be manufactured. Any blade contour may be designed without affecting the weldability of the impeller, thus minimizing compromises in aerodynamic design. The impellers (Fig. 12.113) are available in the same materials and range of properties as the fillet-welded impellers.

To ensure quality, the following general inspection procedures are typically carried out on welded impellers:

- Material certification reports are reviewed for compliance with specifications.
- Test bars for each forging are serialized and follow the impeller through all heat-treatment cycles.

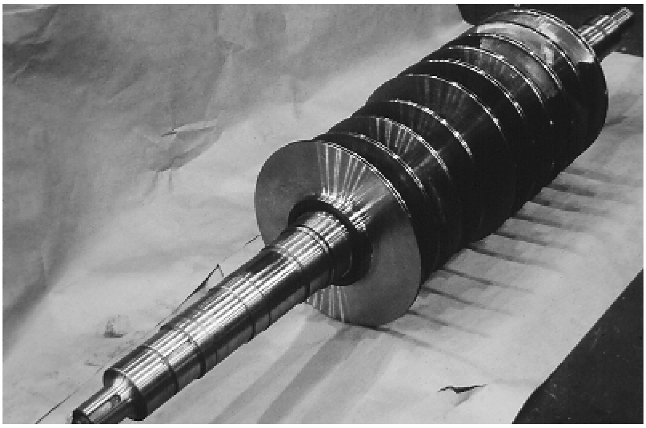

FIGURE 12.113 Finished impeller after slot welding. *(Dresser-Rand Company, Olean, N.Y.)*

- Magnetic particle inspection is conducted after each welding cycle, both before and after heat treatment. Final magnetic particle inspection takes place after the overspeed test.
- Dimensional checks are made after initial welding and after completion of the manufacturing and test process.
- Hardness and tensile tests are performed on the test bars to ensure specification compliance. Hardness checks are made of the impeller cover and disk to verify compliance with specifications and agreement with test bars.

12.11 ROTOR DYNAMIC CONSIDERATIONS

In addition to meeting the aerodynamic expectations, it is equally important that the compression equipment meet the rotor dynamic requirements and be able to operate in a satisfactory and stable manner. Most large equipment today is furnished with noncontacting vibration transducers installed near the bearings. These allow both user and manufacturer to measure rotor vibration amplitudes and frequencies. Maximum acceptable vibration levels at these locations at speed are generally defined in line with applicable API or other industry recommendations. One such guideline essentially allows $(12{,}000/\text{max. cont. speed})^{1/2}$. In addition, manufacturers have also generally established their own minimum margin requirements between operating speeds and critical speeds. These requirements basically follow those set forth in API 670. The majority of compressors operate with flexible rotors, running between their first and second critical speeds. They exhibit shaft vibration amplitudes as indicated by the GOOD range in Fig. 12.114.

The location of the critical speeds plays a large part in the design of a compressor. A manufacturer has to ensure that the compressor will be able to operate over the full speed range intended; this insurance comes from rigorous computer analysis of the critical speeds, unbalance sensitivities, and stability of a system. It is generally in the best interest of overall reliability to make the system as stiff as possible (i.e., to minimize the distance between the journal bearings).

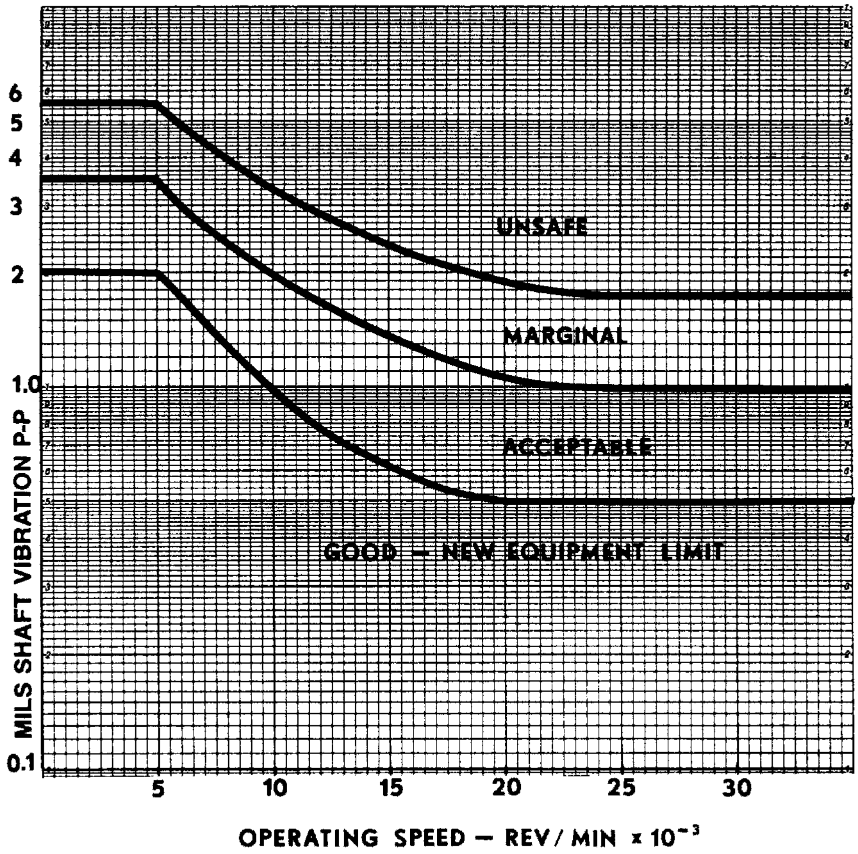

Notes:

1. Operation in the "unsafe" region may lead to near-term failure of the machinery.
2. When operating in the "marginal" region, it is advisable to implement continuous monitoring and to make plans for early problem correction.
3. Periodic monitoring is recommended when operating in the "acceptable" range. Observe trends for amplitude increases at relevant frequencies.
4. The above limits are based on Mr. Zierau's experience. They refer to the typical proximity probe installation close to and supported by the bearing housing and assume that the main vibration component is *1 × rpm frequency*. The seemingly high allowable vibration levels above 20,000 rpm reflect the experience of high-speed air compressors (up to 50,000 rpm) and jet-engine-type gas turbines, with their light rotors and light bearing loads.
5. Readings must be taken on machined surfaces, with runout less than 0.5 mil up to 12,000 rpm, and less than 0.25 mil above 12,000 rpm.
6. Judgment must be used, especially when experiencing frequencies in multiples of operating rpm on machines with standard bearing loads. Such machines cannot operate at the indicated limits for frequencies higher than 1 × rpm. In such cases, enter onto the graph the predominant frequency of vibration instead of the operating speed.

FIGURE 12.114 Turbomachinery shaft vibration chart. (From H. P. Bloch and F. K. Geitner, *Machinery Failure Analysis and Troubleshosssoting*, 3rd ed., Gulf Publishing Company, Houston, Tex., 1998.)

The effort to minimize bearing span manifests itself in various ways in compressor design. These include:

- Positioning the bearings as far inboard in the case end enclosures (heads) as possible
- Minimizing end seal lengths
- Using variable stage spacing

In the past, many casings were designed based on a fixed axial length per stage, usually determined by the largest impeller that the manufacturer anticipated would be used. When smaller impellers were used in these stages, wasted axial space resulted. With variable-stage spacing, each impeller gets only the room it requires. More impellers can thus be accommodated.

The location of the second critical speed can be greatly influenced by overhung weight, which is the weight outboard of the journal bearings at each end. This typically includes the thrust disk and coupling(s). Relocating the thrust-bearing inboard of the journal bearings on a drive-through unit increases the second critical speed. This permits a higher operating speed or increased bearing span, resulting in operating speeds farther removed from the first critical speed.

A typical rotor dynamic analysis starts with a definition of the rotor configuration. The shaft is divided into sections of a given diameter and length, and the impellers, thrust disk, balance piston, and coupling(s) are represented as weights or forces.

Lateral critical speed calculations are then made, with the aid of a computer. This analysis gives the approximate location of the rigid critical speeds, and with the input of different support or bearing stiffnesses, criticals are calculated as a function of stiffness. The resulting plot is known as a *critical speed map* (Fig. 12.115). The mode shapes determined by these calculations are of value in determining the location of the unbalance required for exciting a particular critical speed in the response analysis that follows.

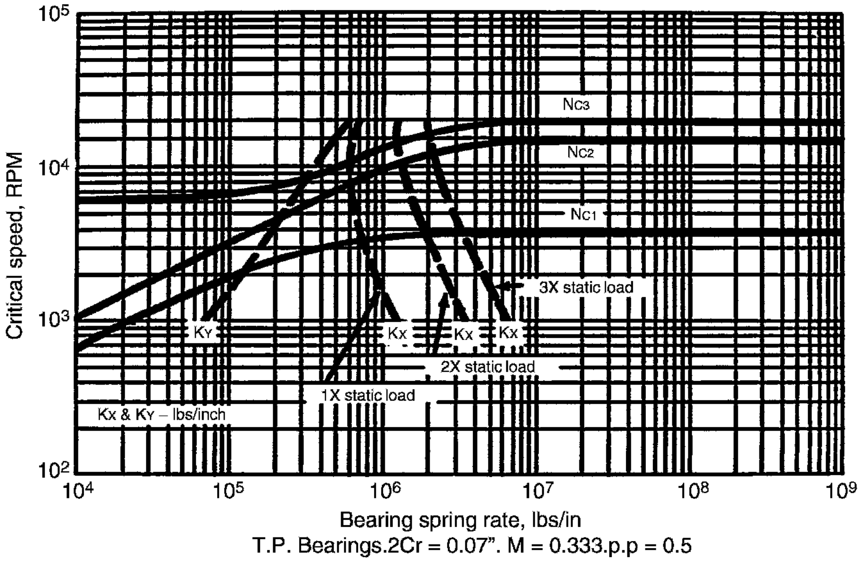

FIGURE 12.115 Critical speed map. *(Dresser-Rand Company, Olean, N.Y.)*

There also exist programs that compute the performance characteristics of the bearings, including oil flow, horsepower loss, oil temperatures, effective eccentricity, and load per pad, along with oil film stiffness and damping coefficients in the vertical and horizontal directions as a function of speed. Most often, these results are cross-plotted on the critical speed map, as shown in Fig. 12.115. The curve labeled K_y is the horizontal bearing stiffness and the curves labeled K_x are the vertical bearing stiffness. The K_x curves are for one, two, and three times the bearing static load. The two- and three-times curves represent 1*g* and 2*g* dynamic or unbalance loads added to the weight load. Although not shown, dynamic loads would similarly influence the K_y stiffness. The intersection of the bearing stiffness and rotor mode curves are the undamped critical speeds. It is seen that the horizontal and vertical critical speeds can be different and that dynamic or unbalance loads influence the critical speed results. Also, as bearing or support stiffness increases, the critical speeds approach the critical speeds of the rotor on rigid or simple support as a limit.

The next step makes use of a rotor response analysis program that calculates the unbalance response of a rotor in fluid film bearings. It is able to predict rotor synchronous vibration behavior at all speeds for a selected unbalance distribution. Bearing stiffness and damping characteristics are part of the input. The motion of the rotor is treated as two-dimensional. The output gives the major and minor axes of an ellipse formed by the locus of the shaft center. Dynamic bearing forces can also be determined for the bearings. Examples of typical results from such an analysis are shown in Figs. 12.116 (amplitude vs. speed) and 12.117 (bearing force vs. speed). This program has proven to be a most valuable tool for predicting the synchronous vibration behavior of rotating machinery.

The most recent analytical tool, developed during the mid-1970s, is rotor stability analysis. This technique has been used to increase the understanding of various rotor instability phenomena that became apparent in compressors designed for extreme-high-pressure applications.

The stability program integrates rotor geometry with support stiffness and damping to determine system-critical speeds, damped mode shapes, and an exponential representation

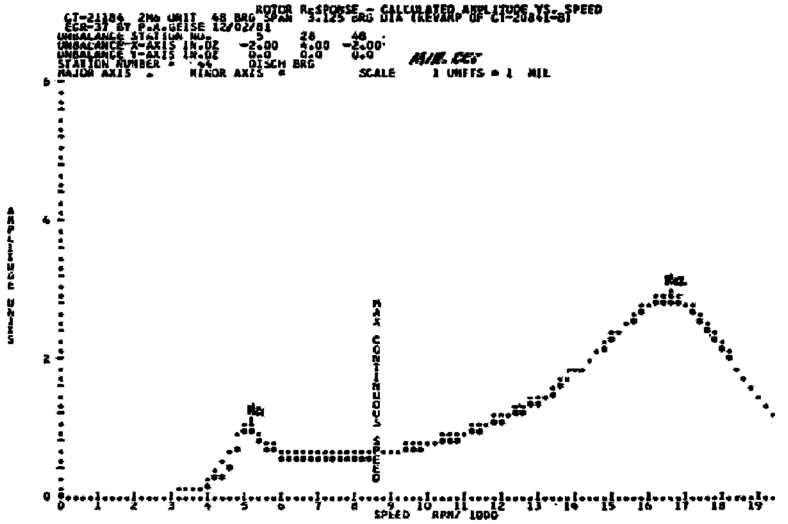

FIGURE 12.116 Amplitude vs. speed plot (unbalance response plot). *(Dresser-Rand Company, Olean, N.Y.)*

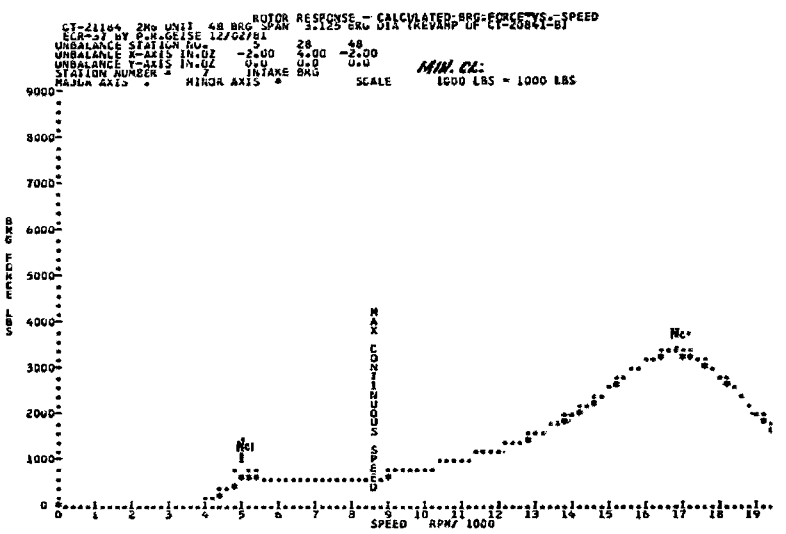

FIGURE 12.117 Bearing force vs. speed plot (unbalance response plot). *(Dresser-Rand Company, Olean, N.Y.)*

of system stability. It is complicated in that eight coefficients are used for each bearing: four stiffnesses, normal and cross-coupling, and four damping, normal and cross-coupling. These can be input for the seals if desired. In addition, the program can accept other input, such as aerodynamic effects, internal friction, and negative damping.

These analysis methods yield critical speeds and logarithmic decrements together with three-dimensional damped shaft mode shapes. The critical speed and logarithmic or *log* decrement output is plotted in the format illustrated in Fig. 12.118. It displays critical frequency in cycles per minute vs. shaft speed in revolutions per minute so that synchronous excitation will be a 45° line as shown. These curves represent the vertical and horizontal modes of the first and second critical frequencies, respectively. In essence, these curves indicate how the critical frequency varies with shaft speed, and the intersections with synchronous excitation are the critical speeds. Log decrement values offer a relative means in ranking the ability of a system to cope with undesirable excitation. The higher the value, the greater the excitation required to make the system unstable.

Torsional studies represent another type of analysis sometimes performed on a rotor system. The torsional natural frequencies are calculated by dividing the system into a number of mass moments of inertia separated by torsional spring constants for the various shaft sections. An example is given in Fig. 12.119. Results are obtained by use of a computer program.

For the majority of systems, only shaft rotational frequency is considered as potential excitation. A system is considered satisfactory if the torsional natural frequencies are 10% or more away. If closer than 10%, the system is tuned. An interference diagram is shown in Fig. 12.120. The sloped line represents excitation. Note how the natural frequencies are well removed from the operating range in this example.

Although steady-state torsional problems are rare, a potentially troublesome transient torsional problem exists in conjunction with synchronous motor drivers during startup. Widely different motor startup characteristics are possible, and their effect on the system must be analyzed. Computerized procedures that can accurately predict alternating and peak torque levels have been developed. System design integrity can thus be ascertained.

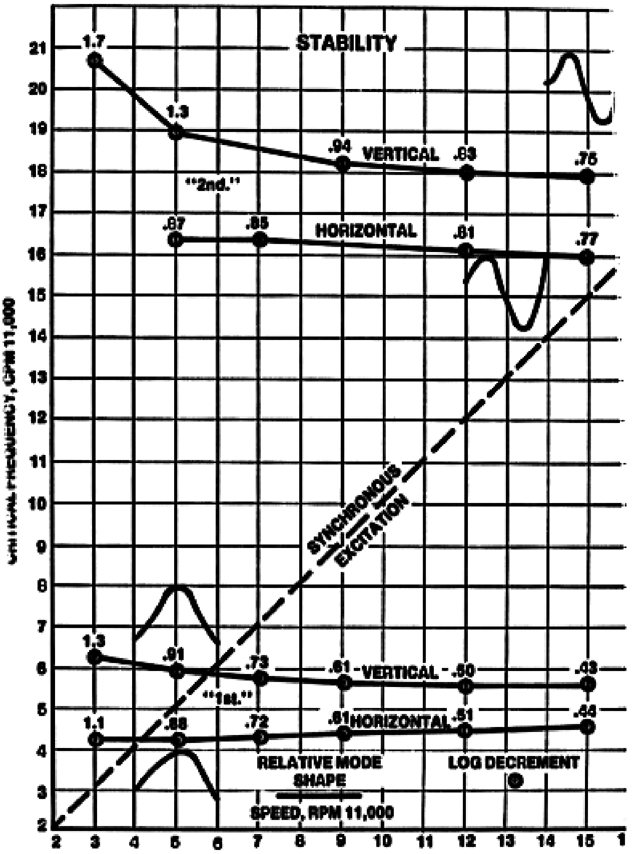

FIGURE 12.118 Rotor stability (logarithmic decrement) plot. *(Dresser-Rand Company, Olean, N.Y.)*

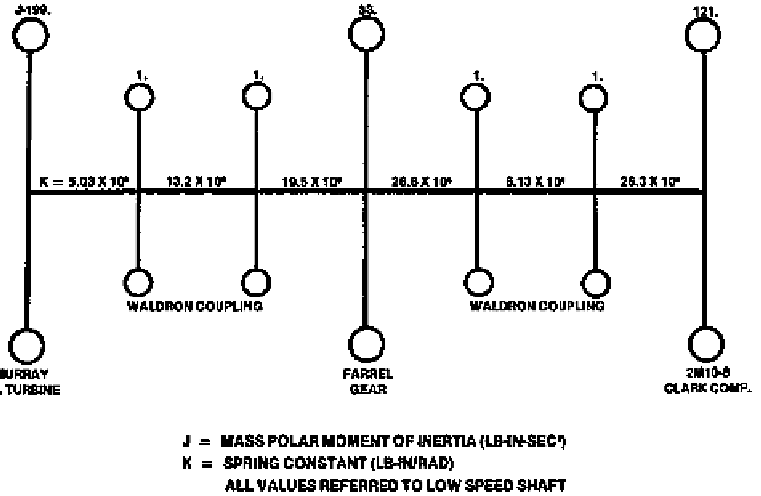

FIGURE 12.119 Torsional natural frequency plot. *(Dresser-Rand Company, Olean, N.Y.)*

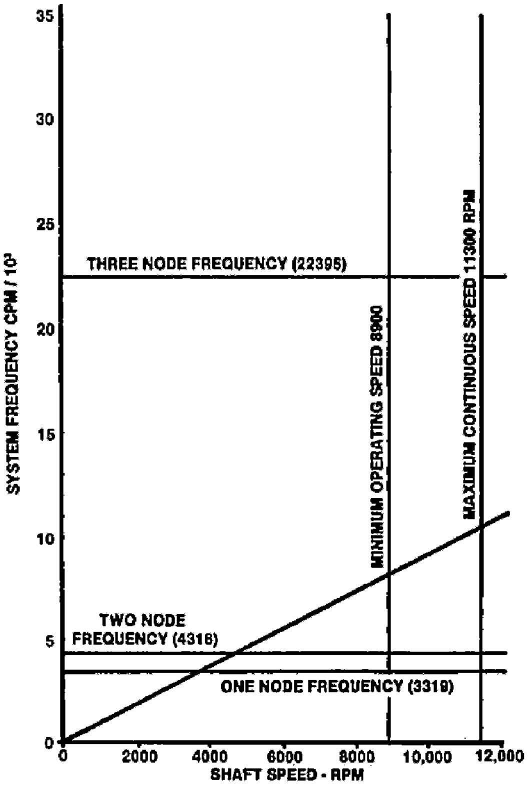

FIGURE 12.120 Interference diagram. *(Dresser-Rand Company, Olean, N.Y.)*

Steady-state torsional problems are somewhat more likely to occur in gear-driven compression systems. Here, an appropriate torsional analysis takes on added importance.

12.12 FOULING CONSIDERATIONS AND COATINGS*

Process compressors are required to run at or near peak efficiencies for long periods of time. It is on this basis that two solutions to the polymerization problem, flush liquid injection and the application of coatings, have been implemented.

The introduction of liquid into the gas stream is always process-dependent and is thus not considered within the scope of this book. However, modern coating technology should be reviewed within the context of centrifugal compressor design.

12.12.1 Polymerization and Fouling

The chemical mechanism that takes place to generate polymerization is not well understood as it applies to compressor fouling. However, what is known is that hydrocarbons inherent in the process gas, or formed during the compression process, can bond tenaciously to components and lead to significant performance loss (see Fig. 12.121). Deposits of this

---

* From R. Chow, B.McMordie, and R. Wiegand, Coatings limit compressor fouling, *Turbomachinery International*, Jan.–Feb. 1995. Adapted by permission of the publishers.

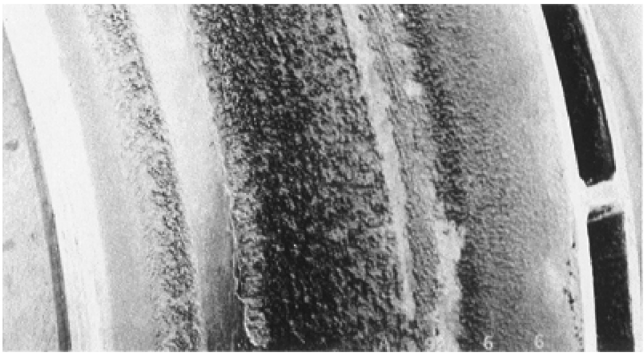

FIGURE 12.121 Centrifugal compressor impeller, showing fouling deposits. (*Turbomachinery International, Norwalk, Conn.*)

type have been found in compressors used for hydrocarbon processing, coke gas blowers, and other units where the gas contains sufficient amounts of hydrocarbons under the right conditions of pressure and temperature.

Factors that have been found empirically to be critical to the fouling process are:

- *Temperature.* Polymerization occurs above 194°F (90°C).
- *Pressure.* The extent of the fouling is proportional to pressure.
- *Surface finish.* The smoother the surface, the less apt the component is to foul.
- *Gas composition.* Fouling is proportional to the concentration of reactable hydrocarbon in the process (inlet) gas.

12.12.2 Fouling and Its Effect on Compressor Operation

Component fouling has many detrimental effects on compressor operation.

Unbalance One of the most obvious is the buildup of material on the rotor. This can lead to unbalance, which gradually builds until the unit exceeds its allowable vibration limit and has to be shut down to correct the problem. In addition, operation with significant rotor unbalance can lead to fatigue loading and a possible reduction in component life.

Abrasive Wear Deposits have also been known to reduce both the axial and radial clearances between the rotor and the stationary components. This clearance reduction has led to abrasive wear, which has severely damaged numerous impellers and labyrinth seals.

Unbalance and abbrasive wear are progressive, with the costs associated with correction showing up after longer periods of operation.

Loss of Efficiency When considering fouling that affects unit performance, the losses and associated costs are revealed very quickly, typically only months after the unit is started. This has been confirmed by actual operation. The case study that follows describes a 6% decrease in efficiency after only 17 months of operation. In addition, it was found elsewhere that the most intensive growth of the deposition layer occurred during the first 50 to 200 hours of operation. These examples reinforce the fact that fouling degradation occurs early and can cause significant losses, making it increasingly important to take corrective action from the start to assure optimum efficiency.

Fouling affects efficiency through three basic loss mechanisms:

1. Friction losses
2. Flow area reductions
3. Random changes of pressure distribution on the blade

These mechanisms affect both the stationary flow path and the rotating element. However, in the past, attempts to correct the fouling problem were limited to the diffuser and return channels, which were considered to be the most susceptible. The rotating element is less likely to foul due to the dynamic force applied to the deposits because of the dislodging effect of rotation. In addition, by design, the stationary flow paths have slightly rougher surface finishes than those of the rotating element. Today, however, fouling of both stationary and rotating flow path components needs to be addressed.

The Elliott Company has modeled the effect of fouling on compressor performance using their compressor performance prediction program. This work simulated the effect of deposits on stationary flow path surfaces on the performance of an Elliott 38M9 centrifugal compressor operating under the following conditions:

- Compressor speed = 6150 rpm
- Inlet pressure = 228 psia
- Inlet temperature = 142°F
- Gas containing a mixture of various hydrocarbons

The study evaluated the effects of diffuser passage width and surface finish on head and efficiency. It showed that losses of 10% or more could result from passage width restrictions of 10% or greater and surface finishes of 500 rpm or higher (Figs. 12.122 and 12.123). It should again be noted that compressor washing, using either water to lower gas temperature or a hydrocarbon solvent to dissolve the deposits, has been used to reduce the extent of fouling.

12.12.3 Coating Case Study

Novacor Chemicals' Ethylene 2 plant is a world-scale petrochemical plant located in Joffre, just east of Red Deer, Alberta, Canada. The main feedstock, ethane, is cracked to make ethylene and other hydrocarbon by-products. Approximately 1.8 billion pounds of ethylene is produced by Ethylene 2 annually.

Ethane is cracked in furnaces and then compressed by the cracked gas compressor string for finish processing and separation of products. The cracked gas compressor string consists of Elliott 88 M, 60 M, and 46 M compressors driven by an Elliott NV9 steam turbine (Fig. 12.124). Historical performance data show that the compressors foul during operation. The formation of polymers in the 46 M compressor is greatest, as this has the highest pressure and temperature in the compressor string.

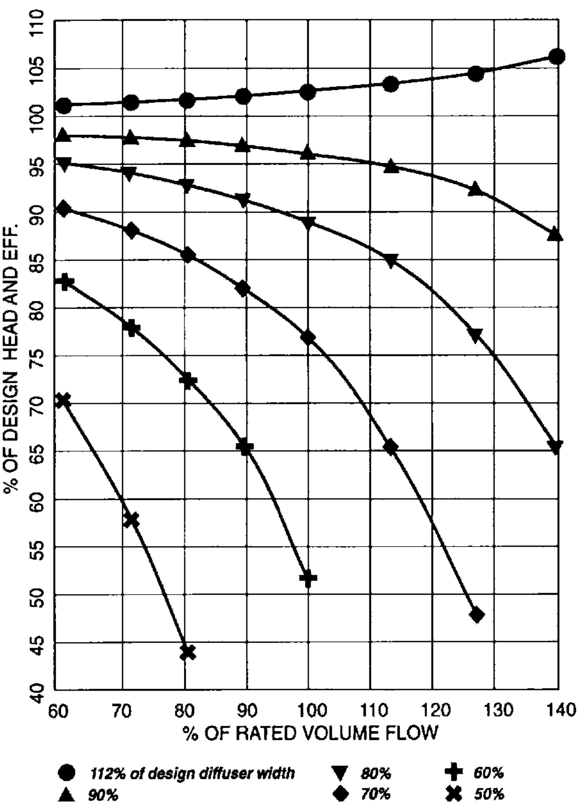

FIGURE 12.122 Effect of diffuser width change on polytropic head and efficiency. (*Turbomachinery International, Norwalk, Conn.*)

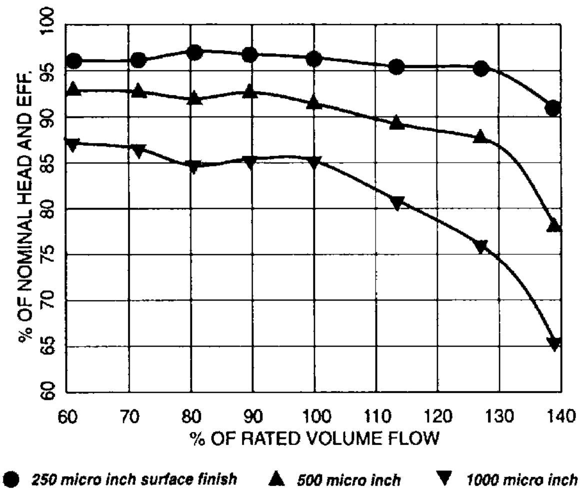

FIGURE 12.123 Effect of diffuser finish on the head and the efficiency for an 80% diffuser width. (*Turbomachinery International, Norwalk, Conn.*)

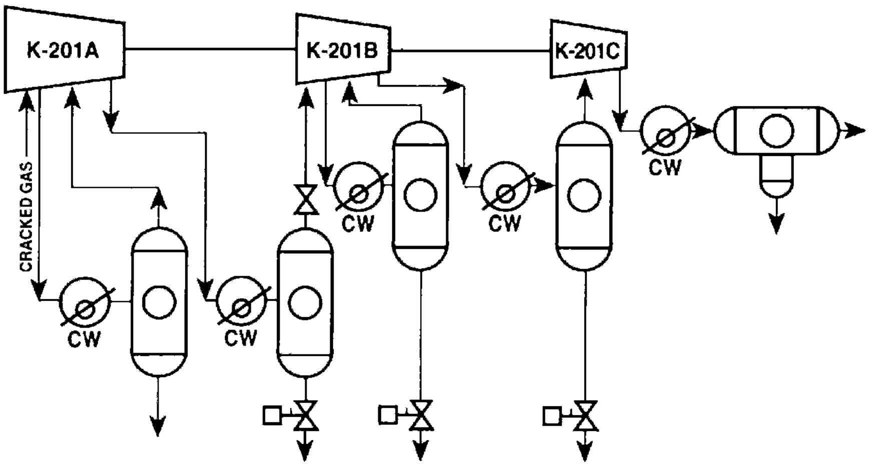

FIGURE 12.124 Compressor string at Novacor Chemicals: K-201A = Elliott 88 M, K-201B = Elliott 60 M, K-201C = Elliott 46 M. (*Turbomachinery International, Norwalk, Conn.*)

To increase reliability and improve the run time of the equipment, coating of the compressor parts was considered. A coating would have to provide three benefits:

1. A *nonstick surface*, so that fouling could not form on the surfaces and degrade performance
2. An *erosion barrier* to the current wash oil injection practice in the compressors
3. *Corrosion protection,* to maintain the finish on aerodynamic surfaces

A risk analysis of the coating showed minimal impact on the process and equipment should the coating not function as designed. The only concern was that unstacking the spare rotor was necessary to coat the compressor wheels. At the next shutdown of the plant, the rotor wheels were coated by Sermatech using the SermaLon coating system.

12.12.4 SermaLon Coating

The SermaLon coating system developed by Sermatech was designed for wet, corrosive environments. It combines the benefits and features of the three types of coatings generally used to combat corrosion of metal components: barrier coatings, inhibitive coatings, and sacrificial coatings.

The outermost layer of the coating system is a high-temperature resin film, which is a barrier against corrodants in the environment. Barrier coatings prevent corrosion by sealing the substrate from environmental effects. But once this seal is broken, corrosion proceeds unchecked at the point of the breech in the coating.

The intermediate layer of the SermaLon coating system is a durable inhibitive coating. Inhibitive coatings contain pigments (e.g., chromates or complex metalo-organic compounds) that prevent corrosion by modifying the chemistry of environmental corrodants contacting the coated surface. These reactions change the pH, reactivity, and even the molecular structure of the corrodants. Inhibitive coatings are very effective as long as the

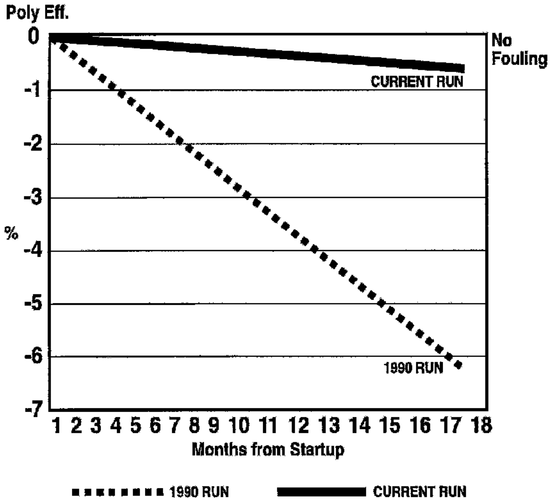

FIGURE 12.125 Fouling history of the compressor at Ethylene 2. (*Turbomachinery International, Norwalk, Conn.*)

film remains intact and inhibitive pigments remain reactive. When the coating is breeched, corrosion of the exposed substrate is slowed until active pigments are depleted.

The foundation of the coating system is a tightly adherent layer of a sacrificial aluminum-filled ceramic. Sacrificial or *galvanic* coatings prevent corrosion of structural hardware instead of the substrate. They are made of a more *active* metal, which when placed in contact with a less-active (more *noble*) metal will be consumed entirely by the environment before the more noble material begins to corrode.

12.12.5 Results

The performane of the compressor to date has shown that the efficiency has remained virtually constant. For comparison, there was a 6% reduction in efficiency during the previous run, without coatings, in the same amount of time (Fig. 12.125). The success in maintaining the performance of the compressor is attributed to the coating and washing system. However, it is impossible to quantify the effect of each alone. It is estimated that the payback for the coating of the rotor is two months.

13

ADVANCED SEALING AND BEARING SYSTEMS*

In the 1970s, a forward-looking Canadian company, Nova, initiated a program to identify, research, and implement technologically and economically sound means of eliminating the many problems associated with oil systems on their centrifugal compressors. The purpose of this program was to improve safety and reduce maintenance and operating costs.

In the years that followed, Nova worked closely with mechanical dry gas seal (dry seal) and magnetic bearing manufacturers on the development, application, and installation of these technologies for centrifugal compressors. By 1978, a fully functional dry seal had been installed successfully. By 1985, the first oil-free compressor using both dry seal and magnetic bearing technologies was operational.

Development of the technologies continues, with recent advancements in thrust-reducing seals and magnetic bearing control system enhancements. Other manufacturers have become active in the field, and by the late 1980s dry seal technology had advanced to the stage where the industry began actively discussing specification standards.

13.1 BACKGROUND

Internal studies conducted by Nova's Alberta Gas Transmission Division in the early 1970s indicated that a significant portion of the downtime on their 79 centrifugal compressors related to problems with the seal or lube oil systems. The problems ranged from failures in auxiliary systems, such as motors and pumps, to leaks and failures in pressure piping resulting from vibration.

[*] Originally developed and contributed (except as noted) by Stan Uptigrove, Paul Eakins, and T.J. Al-Himyary of Revolve Technologies, Calgary, Alberta, Canada. Revolve was spun out of Alberta, Canada–based Nova Corporation, and its technology is now owned by SKF.

A Practical Guide to Compressor Technology, Second Edition, By Heinz P. Bloch

In 1978, Nova and a seal vendor developed a dry seal that reliably replaced the conventional seal oil system in centrifugal compressors. Dry seal development with other vendors continued, with the recent application of alternative face materials, groove patterns, and thrust-reducing configurations—all with successful results.

In 1985, an active magnetic bearing system was installed in one of the centrifugal compressors that had been retrofitted earlier with dry seals. As of 1994, this compressor, an Ingersoll-Rand (IR) CDP-230 driven by a General Electric LM 1500 gas generator and an IR GT-51 power turbine rated at 10.7 MW (14,500 hp), had accumulated nine years of operation since the bearing retrofit. It also served as a test bed for several other pilot installations of new developments in this technology.

In 1988, Nova retrofitted magnetic bearings onto the power turbine of this package. Operating history since then indicates that this higher-temperature environment poses no limitations to magnetic bearing technology. This makes it possible to eliminate the lube oil systems commonly serving the gas compressor and the power turbine, a feature found frequently in aircraft derivative gas turbine compressor packages.

A system expansion undertaken by Nova in the late 1980s has seen the procurement of over 40 new compressors equipped with one or both of these technologies, along with the increasing involvement of equipment vendors in the development of these technologies. Other user companies, among them Alberta Natural Gas, Marathon Oil, Shell Canada, and Exxon Chemicals, have moved in the same direction.

13.2 DRY SEALS

13.2.1 Operating Principles

Dry seal design is based on the gas film technology used successfully in other applications, such as air bearings in high-precision machining and measurement equipment. The heart of the sealing mechanism is comprised of two seal rings (Fig. 13.1). The mating ring has a groove pattern etched into a hard face and rotates with the shaft. The primary ring has a softer face and is restrained from movement except along the axis of the shaft.

Springs are located to axially force the primary and mating ring faces toward one another. When the compressor is shut down and depressurized, the spring forces result in contact of the faces. As the compressor is pressurized, the balance of static pressure forces on the seal mechanism allows a minute volume of gas to leak past the faces.

When the compressor is running, the combination of process gas pressure (hydrostatic forces) and the pumping pressure provided by the spiral grooves (hydrodynamic forces) results in noncontact seal face equilibrium. Increased clearance reduces gas film pressure, and hydrostatic pressure behind the faces tends to reduce clearance. The noncontacting nature of the gas seal film indicates that there is virtually no mechanical wear.

Depending on the process application, the seal mechanism can be used by itself in a single (Fig. 13.2), double, or tandem arrangement. The tandem arrangement (Fig. 13.3) is most common in natural gas pipeline applications. Each stage is capable of sealing against full process gas pressure, up to approximately 10,350 kPa gauge (1500 psig).

In normal operation, the primary stage seals against full process gas pressure and the second stage is unloaded. The secondary stage sees process gas pressure only in the event of a failure of the first-stage seal. This provides backup for safe shutdown. For ease of installation, the entire seal assembly is encapsulated so that it can be installed and removed as a complete unit (Fig. 13.4).

FIGURE 13.1 Dry seal rings. *(Revolve Technologies, Calgary, Alberta, Canada)*

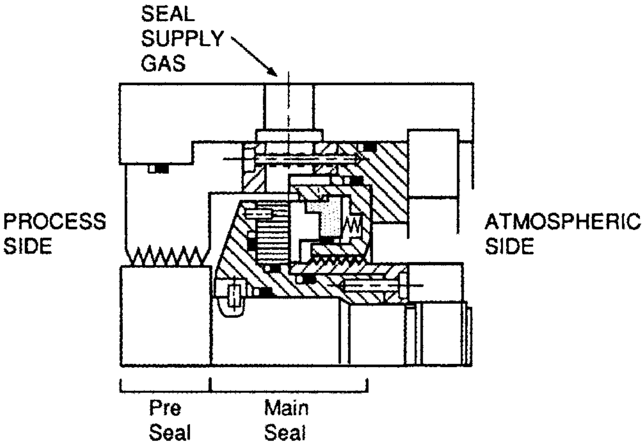

FIGURE 13.2 Single dry seal configuration. *(Revolve Technologies, Calgary, Alberta, Canada)*

A monitoring and control system ensures that the seals are provided with a clean gas supply to prevent potentially dirty process gas from entering the seal (Fig. 13.5). Although other sources can be used, seal gas supply is typically taken from the compressor discharge piping and filtered. A coalescing 0.1-μm filter is used in case liquids are present.

Seal gas is monitored through a small flowmeter and sent to the seal gas supply, where the majority reenters the process cavity across a labyrinth seal. Only the volume of leakage gas pumped by the grooves passes across the seal faces; then it drops across the smooth dam area of the mating ring until it reaches the pressure in the first-stage leakage port.

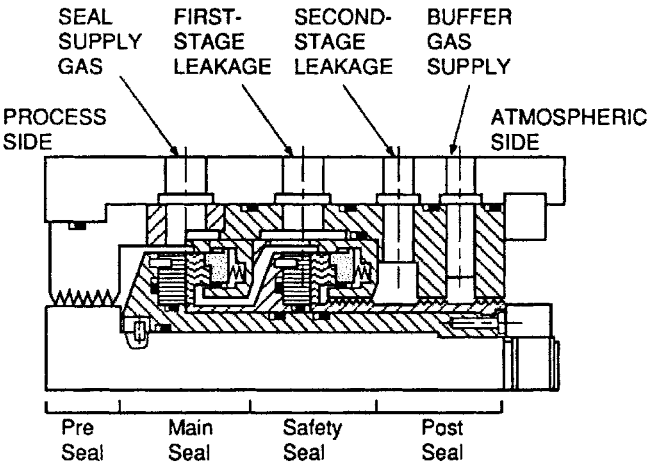

FIGURE 13.3 Tandem dry seal configuration. *(Revolve Technologies, Calgary, Alberta, Canada)*

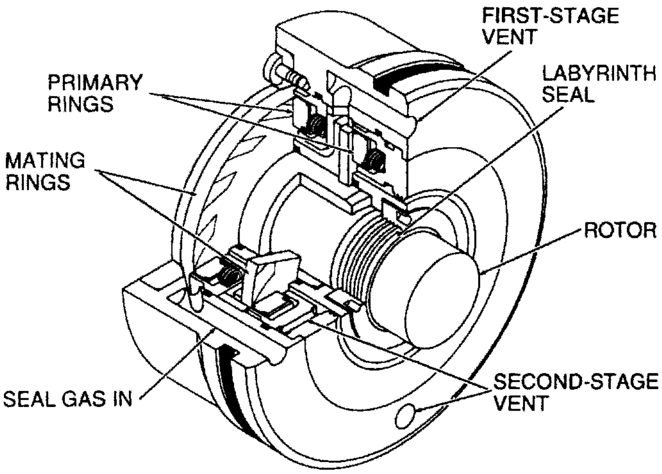

FIGURE 13.4 Dry seal cartridge. *(Revolve Technologies, Calgary, Alberta, Canada)*

Leakage volume is measured at this point because it provides a diagnostic measure of seal operation. An increase or decrease in leakage volume beyond predetermined levels results in an alarm or shutdown of the compressor. A second flowmeter gives a visual indication of leakage volume, enabling operators to gauge the cleanliness of the gas leaving the seal. Leakage volumes vary with size and speed but are typically below 80 L/min (3 scfm).

The seal can also be contaminated by oil from the adjacent bearing cavity. Nitrogen or instrument air is provided as a buffer to prevent oil contamination.

13.2.2 Operating Experience

Nova is one of the largest users of dry seals. From the initial pilot installation, the dry seal retrofit program has grown to include over 30 units, ranging in shaft size from 45 to 255 mm (1.75 to 10 in.), with pressures up to 10,880 kPa gauge (1600 psig) and speeds up to 27,060 rpm.

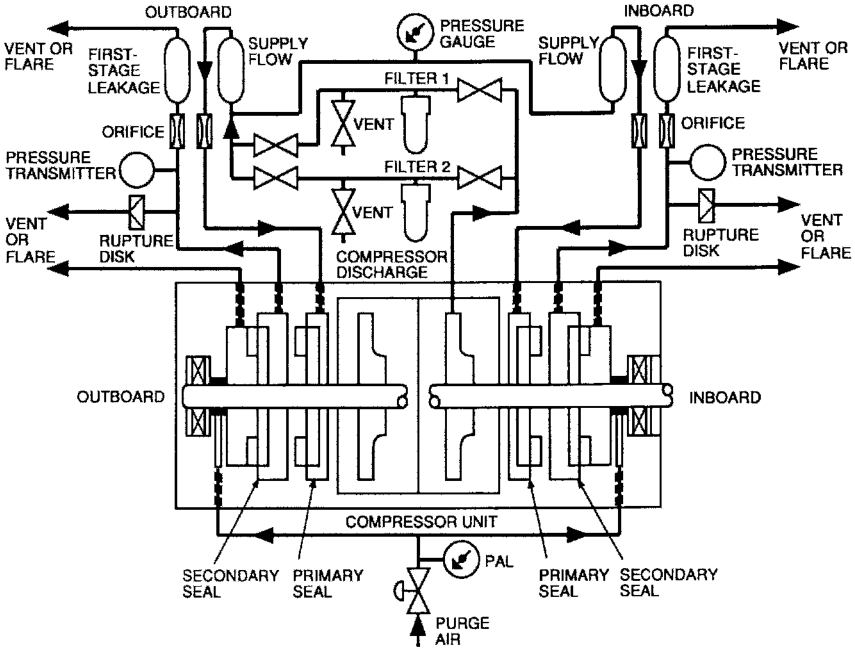

FIGURE 13.5 Dry seal monitor and control system. *(Revolve Technologies, Calgary, Alberta, Canada)*

The program was expanded to include the specification of dry seals on newly procured gas compressors. As of 2005, the total exceeded 100 units with dry seals. Nova's lead has been followed by numerous other companies, and dry gas seals should be considered for the majority of centrifugal compressors. With dry seals, gas compressor safety has increased, and operating and maintenance costs have decreased. Reliability is almost always better than that of oil systems. Dry seals are now an accepted design standard at many cost-conscious and reliability-minded user companies.

13.2.3 Problems and Solutions

Several technical problems were encountered over the course of the program. One problem that continues to occur intermittently is static pressurization of the compressor casing at the beginning of the startup cycle. Working with the seal vendors, users have minimized problems by changing the spring rate of the primary ring carrier springs and by improved quality control of dynamic O-ring and retainer.

In the past, seal gas contamination caused problems because of the extreme flatness tolerances required on the seal faces. Even minute particulates can damage the soft primary ring enough to disrupt seal film stability. Filtration system improvements, including a second coalescing filter upstream of the original, have resolved most of these problems. When a new compressor package is being commissioned, a separate source of seal gas, usually nitrogen, should be provided. This protects the seals from contamination from debris that may be present in recently constructed compressor systems or mainline pipe. Normally, such debris does not cause a problem beyond the first several hours of operation.

Another problem concerned the explosive decompression of O-rings. During operation at pipeline pressures of 4500 to 11,000 kPa gauge (650 to 1600 psig), gas becomes entrapped

FIGURE 13.6 Bidirectional dry seal faces. *(Revolve Technologies, Calgary, Alberta, Canada)*

in the elastomeric O-ring materials. Upon shutdown and compressor casing depressurization, this gas would blister or burst the O-rings as the gas attempted to escape. Using higher-density elastomers and changing the compressor control logic to depressurize only in the event of an emergency have largely corrected this problem.

13.2.4 Dry Seal Upgrade Developments

As early as 1986, Nova began working with a seal vendor on the design of a dual hard-face dry seal. Hard faces enable a face geometry to be devised that allows complete static separation of the faces, taking the noncontact concept one step further. Use of a hard silicon carbide primary ring provides this capability. It also enables dry seal technology to be used in applications as high as approximately 20,000 kPa gauge (2900 psig). User companies have been applying this type of seal since 1988 with very good results.

More recently, additional groove patterns have been used successfully. In 1991, the first bidirectional T-groove seals (Fig. 13.6) were installed. Unlike the spiral groove and other one-directional mating ring designs, the bidirectional seal can be installed on either end of the compressor, which reduces spares inventory requirements. Also, if the compressor rotates in reverse, the seal is not damaged. Operationally, this seal has proven to be as effective as spiral groove seals and offers substantially lower leakage (Fig. 13.7). Since most dry seals in natural gas pipeline applications vent their seal leakage to the atmosphere, this may be of interest in light of increasing attention to environmental emissions. As of 1994, Nova had over 30 compressors operating with bidirectional seals. By 2005 there were dozens more.

13.2.5 Dry Gas Seal Failures Avoided by Gas Conditioning*

Compressor seal statistics are important barometers of equipment reliability. Analysis of modern dry gas compressor seals received from the field for refurbishment validates that 90% of all seal failures result from a lack of clean and dry buffer gas. This high percentage

---

* Based on an article in *Hydrocarbon Processing*, courtesy of Joe Delrahim, John Crane Company, Morton Grove, Ill.

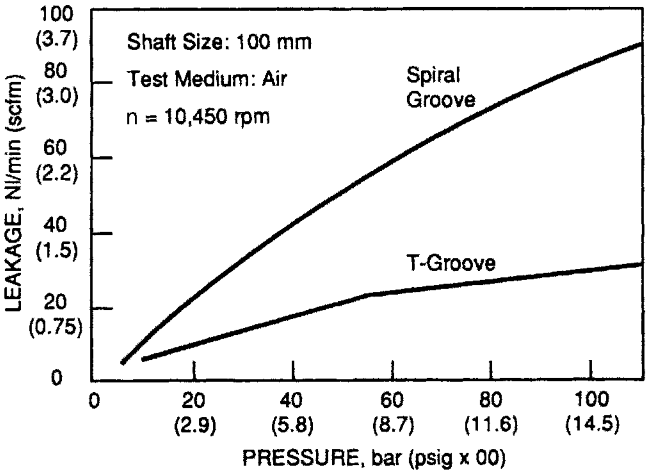

FIGURE 13.7 Groove shape and seal leakage rates. *(Revolve Technologies, Calgary, Alberta, Canada)*

is significant because most companies in the industry invest vast dollars and energy to monitor or record gas seal leakage flow, yet insufficient emphasis is generally placed on reliability assurance and prevention of problems in the first place. More often than not, seals fail because they are deprived of clean and dry buffer gas.

Experience shows that a continuous supply of clean and dry buffer gas is one of the most important requirements for trouble-free operation and long seal life. Unfortunately, this key requirement is often ignored throughout the various planning, commissioning, and operating processes. This shortcoming, particularly during the commissioning period, is almost guaranteed to result in multiple seal failures that cause operational loss and delays in plant startup.

As mentioned earlier, common control system designs for gas seals consist of filtration, regulation, and monitoring. However, although these control systems typically offer elaborate monitoring and regulation features, the filtration issue is often overlooked. In most cases, users and contractors initially choose standard filtration on virtually every application, regardless of gas composition and/or the presence of liquid or of condensation occurring in certain gas mixtures. One competent seal manufacturer's documented project histories show this shortcoming to be the cause of the majority of seal failures, particularly during the commissioning phase, but also during periods of normal operation.

Recognizing that most control systems feature inadequate, indeed elementary, filtration systems, the only obvious advantage of incorporating sophisticated monitoring devices is to indicate when a seal has failed or is about to fail. At best then, these monitoring systems serve to point to the cause of seal failures, yet do little, if anything, to prevent them.

Although in no way implying that dry gas seals are a bad choice for the overwhelming number of process compressors, getting to the heart of the problem should always begin with the proper analysis of mechanical failure. This analysis involves a review of gas composition, commissioning procedures, and control system design, as well as of the various interfaces between the seal, compressor, and seal control system. Further, it is essential to understand how the control system piping and instrument layout interact and function; this requires close examination of the associated flow schematic, which may (or may not) be similar to Fig. 13.5. Of equal importance is control-related and typically preestablished software, which must allow proper logic input to ensure the safe operation of the unit.

A commonly overlooked factor is determination of when condensation will result from a drop in pressure or temperature. For example, a Malaysian petroleum facility operated by a multinational oil producing and processing company experienced frequent seal failures. Upon investigation, personnel from maintenance and from control systems engineering, as well as other plant representatives, concluded that the malfunction was the result of condensate contamination. This condensate formed when buffer gas was being depressurized across the pressure regulator valve, which was located downstream of the filters. With this knowledge, the maintenance team decided to relocate the pressure regulator upstream of the filter. When they also decided to add a heater and insulated the entire line, the problem was solved permanently.

Based on this experience and on numerous requests from the field, engineering resources at John Crane Company in the early 2000s began to be dedicated to the development of gas conditioning units (GCUs). Designed with the intent of consistent delivery of clean, dry, properly pressurized gas to seals, well-engineered GCUs have greatly enhanced the reliability performance of dry gas seals by solving critically important gas supply issues. Unlike conventional gas panels that incorporate only coalescing filters, a modern GCU features a knock-out filter/coalescer vessel that removes solid particulates as well as free liquids and aerosols. A heater-controller also monitors and maintains gas temperature. Maintaining gas temperature above its dew point prevents condensation of aerosols in the process gas stream. Therefore, the collective features of successful GCUs must effectively manage liquids to ensure that the cleanest possible gas supply is always available.

In startup, slow-roll, and settling-out conditions, a thoroughly engineered GCU will maintain adequate gas flow using a seal gas pressure intensifier or similar device. Typically, a flow switch signals the intensifier control, which activates and deactivates the intensifier automatically as needed. The intensifier then provides sufficient seal gas flow to prevent unfiltered process gas from working its way back to the seal faces across the inboard labyrinth. Experienced machinery engineers and failure analysts know that clogging the seal face grooves will cause failures. With minimal customer interface connections and self-checking and self-regulating functions, modern GCUs meet the difficult sealing challenges faced by many industrial facilities.

Need for Training Let's face it: Another common source of problems is lack of training. For example, many maintenance technicians in plants with dry gas seals have never received essential training in seal operation and maintenance. Maintenance technicians familiar with conventional or "wet" seals are used to seeing flooded seal cavities with no consequences. In contrast, dry gas seals not only require no lubrication, but their support systems must be configured to keep liquids, including lube oil, away from seal faces.

A seal training program should not be triggered by mechanical failure, the delivery of new equipment, or a seal replacement occasion. These would also be the wrong times for operating and maintenance technicians to acquaint themselves with the compressor or seal operating manual. Rather, training programs should be arranged as part of supplier selection. The compressor and mechanical seal manufacturer, as well as the design engineering contractor, should offer training as part of their respective services. Also, it is essential to choose seal manufacturers capable of providing on-site technicians to help owners improve equipment reliability, mean time between change or repair, and overall plant productivity.

Case histories show that planning and training pay dividends. The staff of the PT Arun Natural Gas Liquefaction Plant in northern Sumatra, Indonesia, have experienced firsthand the benefits of component analysis and getting to the root of the problem. More than a decade ago, oil leakage into the process gas stream was adversely affecting heat exchanger performance and contaminated the liquefied natural gas (LNG).

The wet seals that PT Arun was using allowed seal oil to enter the process compressors, which disturbed the main heat exchangers used to liquefy feed gas that becomes LNG. PT Arun's engineering forces recognized that dry gas seals were the logical solution. Converting 10 compressor casings to dry gas seals at locations throughout the facility eliminated seal oil migration into the compressed process gas. At this facility, a number of dry gas seals have been in operation for more than a decade without problems. As part of a scheduled compressor inspection, a 10-year-old seal was found to show little wear and tear. This success was attributed to extensive planning and training of personnel prior to implementing the sealing solution.

Minimizing the Risk of Sealing Problems In summary, the key to minimizing seal failure is a thorough review of the components of the plant and their impact on the total system. In order of importance, the following factors should be considered in examining dry seal support systems for centrifugal compressors:

- *Gas composition.* Understanding the actual gas composition and true operating condition is essential, yet often overlooked. For example, it is necessary to understand when and where phase changes and condensation will result in the sealing fluid.
- *Commissioning procedures.* Is clean and dry buffer gas available? Is the seal protected from bearing oil? How is the compressor pressurized or depressurized? How is the machine brought up to operating speed? Are all personnel fully familiar with the compressor maintenance and operating manual? Is the full control system included and adequately described in these write-ups?
- *Control system design.* is clean and dry buffer gas available at all times? Key elements of the system design include buffer gas conditioning, filtration, regulation (flow vs. pressure), and monitoring. It is important not only to review the control system to ensure that problems don't arise, but also to gain an understanding of the system's design philosophy in order to gain an appreciation for the manner in which the logic is addressed. Further, it is crucial to review the buffer gas conditions. Is a heater required? What is the temperature setting for the heater? It is necessary to do some homework to find out the connecting piping structure, size, material, and type, to avoid liquid entrapment. Also, what components and systems are most suitable to withstand harsh outside environments?
- *Interface between the compressor, seals, and control system.* Review the startup and shutdown sequence, liquid removal if applicable, alarm settings, shutdown settings, and flow measurement units. Be sure to recognize signs of problems within the startup and shutdown points. Also, in terms of the logic and the interface, what control setting do you want? Remember that you cannot design one control system to fit every scenario.
- *Plant specifications, including tubing vs. piping, pipe sizing, logic system, and wiring diagrams.* Sometimes, the plant specification is totally different from a supplier's recommendation, but for good reason. For example, a plant may specify tubing instead of piping, or a different type of welding procedure; or, a supplier may recommend a shutdown on a specific setting, but the plant may opt for coordinated shutdown to avoid process upset.

13.3 MAGNETIC BEARINGS

13.3.1 Operating Principles

Magnetic bearings for gas compressor applications are used in both radial and axial configurations, performing the same tasks as their hydrodynamic counterparts. Each bearing consists of a rotor and stator, position sensors, and an electronic control system (Fig. 13.8).

The rotor of a radial magnetic bearing consists of a stack of circular laminations pressed onto a sleeve that can be fitted to the compressor shaft. Used to reduce eddy-current losses, these laminations are selected from a material with high magnetic permeability for higher magnetic flux conductance. The radial magnetic bearing stator is similar to that of an electric motor, with a stack of slotted laminations about which coils of wire are wound (Fig. 13.9). The stator is divided equally into four distinct electromagnetic quadrants, each with pairs of north and south poles. In horizontal rotor applications, quadrant centerlines are oriented at 45°

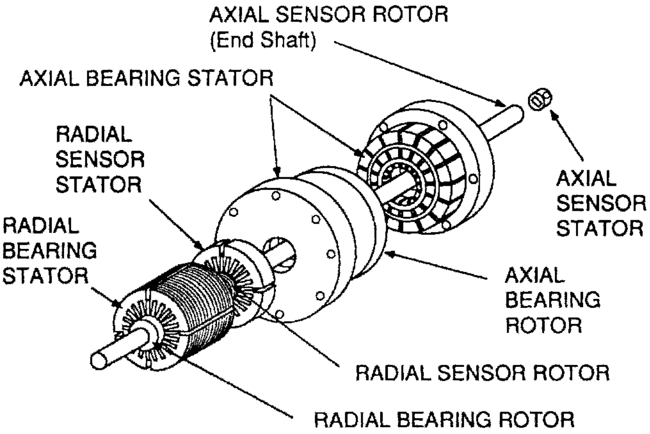

FIGURE 13.8 Magnetic bearing construction. *(Revolve Technologies, Calgary, Alberta, Canada)*

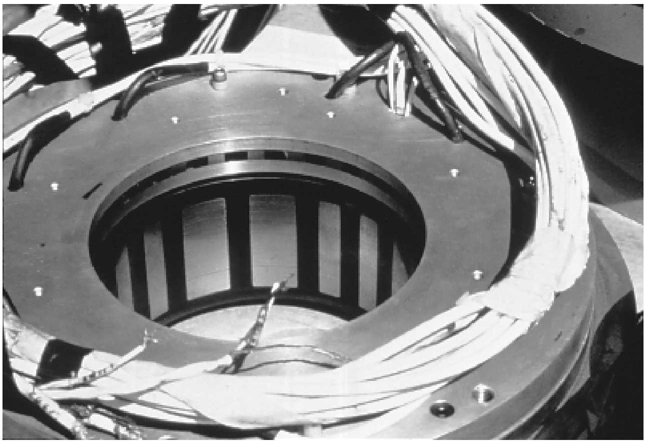

FIGURE 13.9 Radial magnetic bearing stator. *(Revolve Technologies, Calgary, Alberta, Canada)*

to the vertical, so that forces due to gravity are reacted by the upper two adjoining quadrants. This increases load capacity and stability.

The rotor of an axial magnetic bearing is a solid ferromagnetic disk secured to the compressor shaft. The axial bearing stator (Fig. 13.10) is made from solid steel wedges within which coils are wound in annular grooves to form electromagnetic windings. Laminations of highly permeable material are placed between the wedges to decrease eddy-current losses. By positioning a stator on both sides of the rotor disk, a double-acting thrust bearing is created.

The position sensors provide feedback to the control electronics on the exact position of the rotor. Among the well-proven sensor types, we find those that form an inductive bridge. As the air gap increases or decreases, the inductance varies. When the bearing rotor is centered, the position error signal is zero. A shift in the shaft location results in a corresponding change in inductance that alters the position error signal.

The position signal from the sensors is sent to the control electronics and compared to a reference signal that indicates where the compressor shaft should be. Any difference between these two signals generates an error signal. This error signal is processed by the control system. The output of the controls is used to vary the current supplied to the appropriate electromagnet via power amplifiers. The dc voltage for the amplifiers is stepped down for use in the control logic circuitry (Fig. 13.11) by dc–dc converters.

Also located in the control electronics is a monitoring and security system that can initiate alarms and shutdowns to protect the unit from damage. A battery backup system is provided to maintain operation in the event of electrical power failure.

The bearing rotor and stator surfaces are ground smooth to minimize mechanical runout and variation in forces. For this reason, it is important that these surfaces do not come into contact during operation or any other time. To prevent this, an auxiliary landing system is provided, consisting of rolling element bearings located in a removable bearing holder. The clearance between the shaft and auxiliary bearings is normally half the clearance between the magnet rotor and stator surfaces. When the system is deenergized (either in motion or at rest), the shaft coasts down on or remains at rest supported by the auxiliary bearings. Use of a removable sleeve fitted to the shaft, with predetermined radial and axial dimensions, provides a sacrificial means of maintaining the desired clearances. Auxiliary bearings are

FIGURE 13.10 Axial magnetic bearing stator. *(Revolve Technologies, Calgary, Alberta, Canada)*

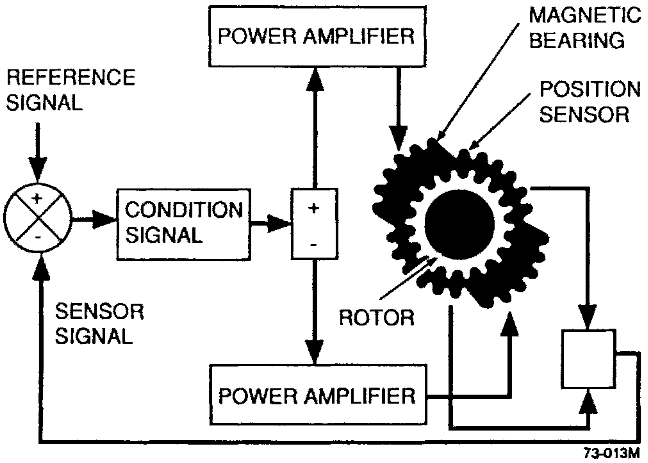

FIGURE 13.11 Control loop for magnetic bearings. *(Revolve Technologies, Calgary, Alberta, Canada)*

typically rated for three emergency coastdowns from full load and speed. Finally, purge air is supplied to the bearing cavities to meet electrical code requirements. Since instrument air is already available at virtually every compressor location, this requirement is satisfied easily.

Compressor startup begins with the supply of air to the bearing cavities, followed by static levitation of the shaft. The casing is then pressurized, and the unit valves that isolate the compressor from the piping system are opened. The driver start sequence then begins. Normal shutdowns involve closing of the unit valves upon detection of no compressor shaft rotation. The casing is left pressurized, but the shaft is delevitated after a predetermined period of time.

13.3.2 Operating Experience and Benefits

Magnetic bearings have been applied by a number of users, and their acceptance is clearly on the increase as run hours are accumulated. At the Alberta Gas Transmission Division of Nova, retrofit programs included three compressors that have the shaft supported by bearings on either side of the impeller (beam-type), one compressor that has the shaft supported by bearings on one side of the impeller (overhung-type), and one overhung power turbine. These installations include a range of shaft sizes from 100 to 175 mm (4 to 7 in.) at the journal diameter, weights from 320 to 1360 kg (700 to 3000 lb), and rotational speeds from 5000 to 11,500 rpm. Newly procured gas compressors were specified by Nova with magnetic bearings. As of 1994, more than 30 of these had been installed at that company. Other turbomachinery installations elsewhere exceeded a total of 200 machines.

The benefits of magnetic bearing systems include increased efficiency due to elimination of the parasitic shear losses associated with the oil system. Power consumed by the magnetic bearing system averages 3.5 kW (5 hp). This power represents losses in the bearing coil windings and control and amplifier electronics as the energy is transferred back and forth between the two. No other power is consumed. On a compressor or power turbine package with two magnetic bearing systems, the energy savings amount typically to just under 3% of package output power.

Another benefit is the increase in safety of the installation due to elimination of the oil system. Insurance company statistics indicate that the rotating equipment user industries, 80% of all equipment fires are oil-related.

The signals from the magnetic bearing system (current and position) provide a source of diagnostic information useful for machine condition and system operation monitoring. This is helpful in detecting negative trends and taking preventive action. Assignment of alarm and shutdown set points to these signals further improves the operating safety and risk of damage to a machine.

To date, conditions detected by magnetic bearing systems include improperly installed or damaged inlet and exit guide vanes, balance line blockage, and incorrectly sized balance pistons as well as buildup of debris on the rotating parts of the aero-assembly, causing unbalance. Many of these situations would remain hidden with hydrodynamic bearings, resulting in higher loads and shorter bearing life spans and, ultimately, would manifest themselves as bearing failures.

When evaluating the application of magnetic bearings, substantial credit may be given to significant reductions in weight and space. This may be of special importance in offshore installations using turboexpanders and canned motor centrifugal pumps. The latter would eliminate mechanical seals as well.

13.3.3 Problems and Solutions

Several technical problems encountered with magnetic bearings are more closely related to design and methods of manufacture than to the technology itself. One bearing rotor lamination failure caused damage to the radial bearings. This failure was traced to manufacturing procedures and material selection. After making appropriate modifications, there were no other failures associated with the bearing mechanical hardware itself.

Failures have occurred with commercially procured subcomponents in the control and power systems. These include problems with axial position sensors, dc–dc converters, and power amplifiers. After the vendor replaced the sensors and converters with improved designs, no failures occurred. Most amplifier problems are related to loose connections within the amplifier, and preventive tightening of connections corrects these.

Establishment of stable control loops spanning the range of disturbance frequencies encountered is achieved by means of physically changing electronic components on printed circuit boards. The time required to complete this activity cannot be predicted with great precision. Depending on operational constraints, this can be construed as a problem. Experienced companies that manufacture magnetic bearings, such as Revolve, have focused on this area for further development. The use of digital technology has made significant improvements possible.

13.4 DEVELOPMENT EFFORTS

Some of the areas where further development would improve industry acceptance of magnetic bearing technology include auxiliary landing systems, higher permeability of materials, sensor developments, standardized electronic hardware, and software tuning capabilities. The auxiliary landing systems used by Nova have typically included only rolling element bearings. However, these bearings are not specifically designed for this application and have only a limited life span in such demanding service. Alternative systems, developed without rolling elements, rely on the passive friction between the rotating element and the stationary element. Materials that have low coefficients of friction and that are sized to allow dissipation of the energy removed from the shaft in the form of heat have yielded encouraging results. To date, they have not been used on shafts within the heavier range of major compressors. Nevertheless, with careful attention applied throughout the design phase, such a landing system could be implemented successfully.

Materials with higher magnetic permeability would enable bearings to be made of smaller physical size. This has advantages not only in terms of overall physical size but also in minimizing the colocation distance between inductive sensors and the center of the load-bearing portion of the magnetic bearing. These considerations can point to certain rotor-dynamic constraints that make good designs more difficult to achieve.

The phenomenon of colocation involves physical separation of the point on the shaft where position is sensed and where the centerline of the reactive force is applied to the shaft. Depending on the rotor-dynamic characteristics of the shaft, the displacement of the shaft at the bearing and sensor locations may be opposite. A signal to correct the rotor position could actually cause the shaft to move farther away from the desired position rather than closer. As one of the major users of magnetic bearings, Nova has no evidence that this has been a problem in any of its magnetic bearing installations. The use of different types of sensors that are colocatable with the centerline of the load-bearing portion of the bearing is a recent development that will ensure that this does not become a cause for concern.

Standard electronic hardware would eliminate the need for spares specific to each installation. Currently, this is not the case with many of the systems in use, which are tuned by changing out hardware components on printed circuit boards.

Software-tuning capabilities would greatly reduce the time taken for hardware tuning of bearing systems. It would also make them more user-friendly and thereby effect greater industry acceptance of the technology. This feature involves the development of digital control systems that are responsive and robust enough to handle the envelope of loads imposed during compressor operation. Their introduction has been delayed by limitations in hardware speed, combined with the complexity of the necessary control algorithms.

A number of users, including Nova, have recently put into operation an enhanced digital magnetic bearing control system that not only incorporates standard electronic hardware and a more user-friendly interface but also takes better advantage of the diagnostic abilities of magnetic bearing technology.

13.4.1 Thrust-Reducing Seals

To take advantage of current dry seal and magnetic bearing technology, Revolve is focusing considerable attention on thrust-reducing seals for both overhung- and beam-type compressors. The first thrust-reducing seal for overhung compressors was installed in 1988, making possible the application of magnetic bearings in this type of compressor. Overhung compressors typically undergo much higher thrust loading upon startup than do beam-type compressors because their pressure forces are not balanced. Without the thrust-reducing seal, the size of the axial magnetic bearing required would have been prohibitive. The seal enabled reduction of the bearing to a size easily incorporated into the housing.

The compressor selected for this application, originally of radial inlet design, was retrofitted to an axial inlet configuration (Fig. 13.12). Basically, a tube encloses a volume projecting from the eye of the impeller, roughly equivalent to the cross section of the shaft. A dry seal located at the eye of the impeller is used to isolate this volume from the compressor process cavity (Fig. 13.13).

Thrust control begins on startup with the tube at atmospheric pressure. As head builds across the compressor and impeller, a net thrust results in the direction of the flow into the compressor, thereby loading the Z2 axial magnetic stator (Fig. 13.14). The increasing current signal is processed through an electropneumatic transducer that allows discharge pressure

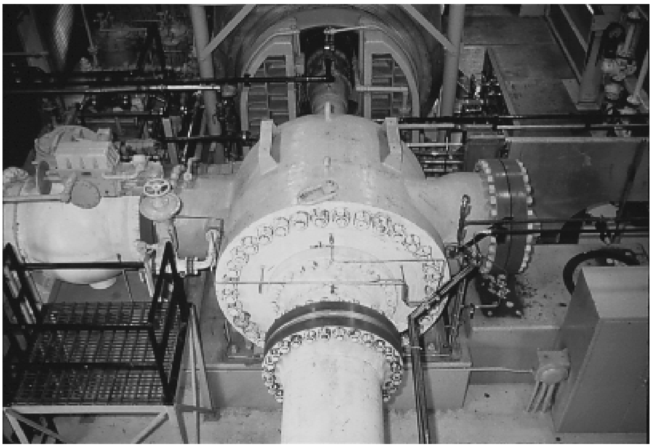

FIGURE 13.12 Axial inlet compressor being retrofitted with magnetic bearings. *(Revolve Technologies, Calgary, Alberta, Canada)*

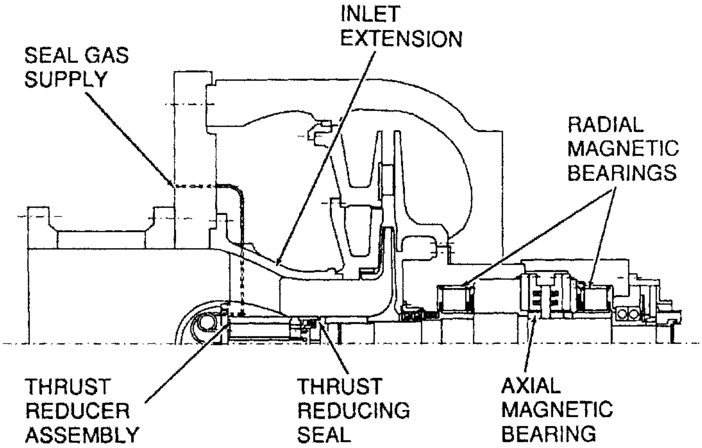

FIGURE 13.13 Axial inlet thrust reducer. *(Revolve Technologies, Calgary, Alberta, Canada)*

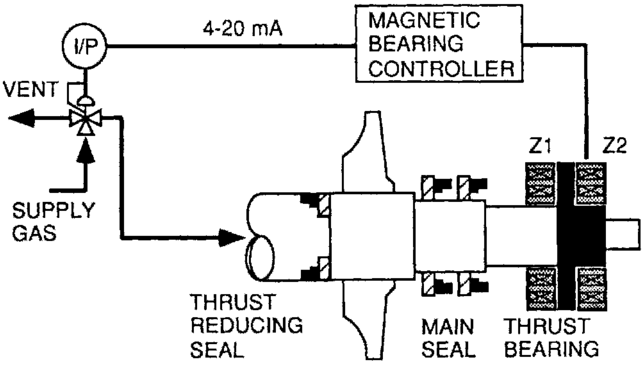

FIGURE 13.14 Control for an overhung thrust reducer. *(Revolve Technologies, Calgary, Alberta, Canada)*

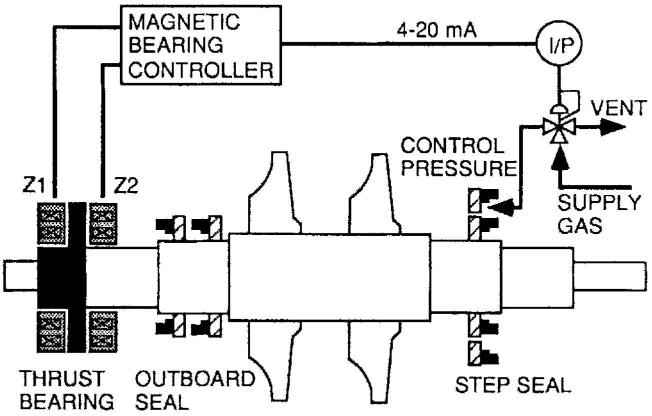

FIGURE 13.15 Control for a beam-type thrust reducer. *(Revolve Technologies, Calgary, Alberta, Canada)*

seal supply gas into the tube. This pressure increases, counteracting the thrust load on the shaft, and reduces axial bearing current until equilibrium is attained.

For beam-type compressors, a thrust-reducing seal was installed in 1991. This seal acts on the current signal from the active stator of the axial magnetic bearing (Fig. 13.15) in much the same way as does the system for overhung compressors. Seal stages of different diameter, combined with an active pressure regulator and discharge pressure seal supply gas, provide an envelope of variable axial load. This is used to counteract the net thrust on the shaft imposed by pressure differential across the impeller and gas momentum forces.

These loads are normally counteracted by a balance piston. As discussed in Section 12.5, a balance piston, or balance drum, is a cylinder of predetermined size fitted onto the shaft adjacent to the discharge side of the impeller. The pressure differential across the impeller and resulting net thrust is balanced by a reversal of the same pressures across this cylinder. This is done by fitting a labyrinth seal to the outside diameter of the cylinder and allowing a stream of gas from the discharge side of the impeller to flow across the seal and then through a *balance line* back to the suction side for recompression. Use of a thrust-unloading seal can minimize or completely eliminate the need for a balance piston leakage and thereby increase the overall efficiency of the compressor. Balance piston leakage can be as high as several percent of the flow through the compressor.

13.5 INTEGRATED DESIGNS

Magnetic bearing technology yields information previously unknown, such as the effect of internal aerodynamic design on bearing loads. The uncertainty associated with this design factor is one reason that magnetic bearing technology has not gained greater acceptance. By combining the operational knowledge gained to date with recent advances in numerical analysis hardware and software, a predictive model for bearing loads could be devised that would reduce or eliminate this uncertainty.

To date, the retrofit of these technologies has served to illustrate the practicality, robustness, and limitations of various configurations. This does not mean that the optimum has been reached for all factors affecting operational efficiency and serviceability. Thrust-reducing

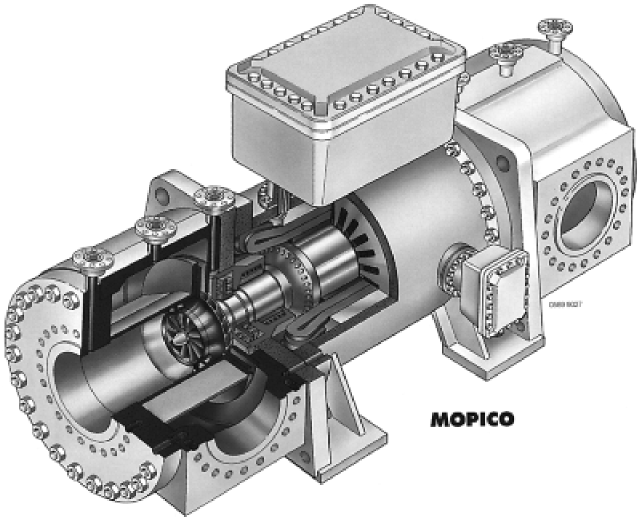

FIGURE 13.16 Sulzer Mopico motor pipeline compressor, incorporating magnetic bearings. *(Sulzer, Ltd., Winterthur, Switzerland)*

seals provide an excellent example. The value of magnetic bearing signals in active control loops governing other aspects of turbomachinery performance has been demonstrated with thrust-reducing seal applications. Of the many factors that influence turbomachinery design, Revolve and such large-scale users as Nova Corporation believe that these technologies can assist in attaining greater compressor efficiencies when incorporated at the conceptual stage.

Dry seal and magnetic bearing technologies offer significant advantages over the systems they replace. The vast majority of problems encountered have been solved and are not related to the technologies themselves. Recent advancements in magnetic bearing control technology and thrust-reducing seal applications take greater advantage of the benefits offered by these technologies. Where they have been incorporated into the design concept stage of turbomachinery development, they have proven to lead to interesting and advantageous designs.

Two of these advantageous designs are embodied in the Sulzer motor pipeline compressor (Mopico) and Sulzer-Acec high-speed oil-free intelligent motor (Hofim) compressors. The Mopico gas pipeline compressor features a high-speed two-pole squirrel-cage induction motor. Motor and compressor are housed in a hermetically sealed vertically split forged steel casing (Figs. 13.16 and 13.17). The center section contains the motor and bearings, and each of the end casing sections houses a compressor wheel, a fixed-vane diffusor, and inlet and discharge flanges.

Mopico compressors can be operated in series or parallel (Fig. 13.18). Magnetic radial bearings and a double-acting magnetic thrust bearing maintain the runner in position. The motor is cooled by gas metered from the high-pressure plenum of one of the compressor housings. Hence, the Mopico runs completely oil-free.

The speed and thus the discharge rate of the Mopico unit is controlled by a thyristorized variable-frequency drive. This drive was developed by Ross Hill Controls Corp. of Houston, Texas. It uses thyristors that can be switched out. These enable pulse-free run-up without current peaks and an operating speed range of 70 to about 105%.

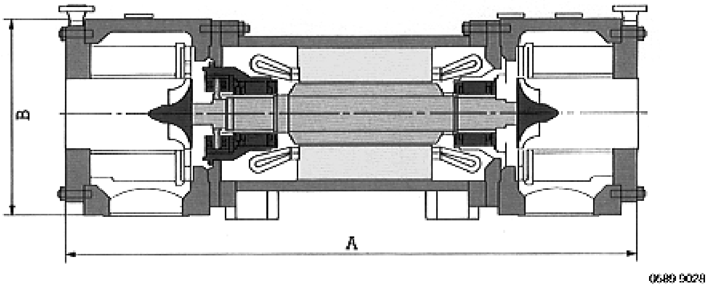

Dimensions and weights

Frame size	Power kW	A mm	B mm	Weight kg
RM28	2000	2500	900	9000
RM35	3500	2900	1000	11000
RM40	6000	3300	1200	13000

FIGURE 13.17 Dimensions, weight, and simplified cross section of a Mopico compressor. *(Sulzer, Ltd., Winterthur, Switzerland)*

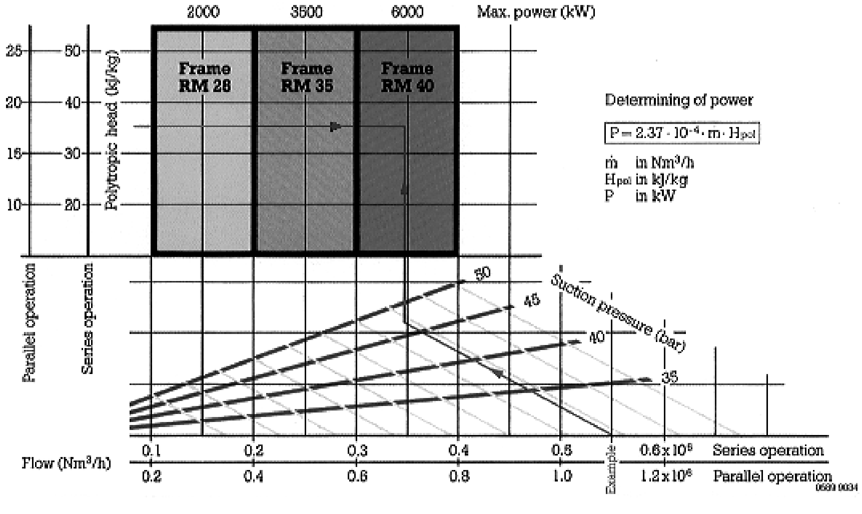

FIGURE 13.18 Application ranges for Mopico compressors. *(Sulzer, Ltd., Winterthur, Switzerland)*

Refer to Fig. 13.19 for an overall installation schematic and note that the following conditions can be complied with through the new combination of elements:

- Low installation, maintenance, and energy consumption costs
- Broad operating range at high economic performance
- Compatibility with existing compressors
- Unattended remote control

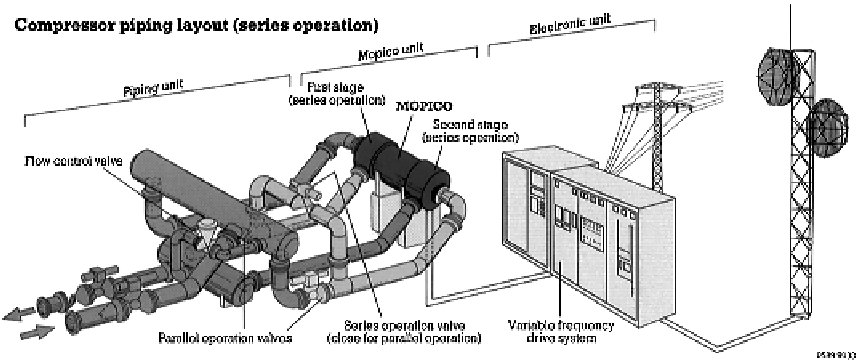

FIGURE 13.19 Installation schematic for a Mopico compressor. *(Sulzer, Ltd., Winterthur, Switzerland)*

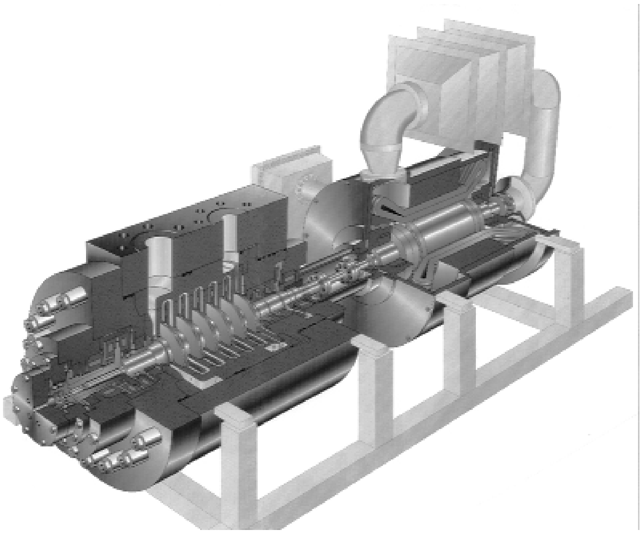

FIGURE 13.20 Hofim high-speed oil-free intelligent motor compressor. *(Sulzer, Ltd., Winterthur, Switzerland)*

- Emissionless and oil-free
- Possibility of outdoor installation

Based on cost per installed horsepower, the cost of the Mopico compressor is only about two-thirds that of a gas turbine unit and less than half that of a low-speed reciprocating compressor. It is some 10% less than that of a conventional centrifugal compressor with dry seals, magnetic bearings, and a direct-drive high-speed induction motor with variable-frequency drive.

On the other hand, a conventional centrifugal compressor with motor gear drive and variable inlet guide vanes is less expensive. This system is, however, unacceptable for pipeline application because of poor efficiency under low-pressure-ratio conditions.

Sulzer-Acec's Hofim is an equally promising new design concept. This high-speed oil-free intelligent motor compressor is shown in Fig. 13.20. It features separate motor and compressor directly coupled, with both machines supported on magnetic bearings. The prototype application is in a natural gas storage facility, for which the key parameters are:

Motor nominal speed	20,000 rpm
Motor nominal power	2000 kW
Compressor inlet pressure	5000 kPa
Compressor discharge pressure	15,500 kPa
Compressor speed range	70–102%
Compressor flow	38,000 $N \cdot m^3/h$

The motor is an asynchronous squirrel-cage induction machine driven by a solid-state variable-frequency drive. The compressor is a six-stage barrel machine of fully modular design. Dry gas seals are used to minimize internal and external leakage. An active balance system controls residual thrust of the entire unit to a level compatible with the capacity of the axial magnetic bearing. The unit was developed jointly by four companies in conjunction with the European Brite program.

13.6 FLUID-INDUCED INSTABILITY AND EXTERNALLY PRESSURIZED BEARINGS*

13.6.1 Instability Considerations

In the 1950–1990 period the Bently-Nevada Company played a role of unparalleled importance in understanding and monitoring machinery vibration. In the late 1990s and after the company became part of the General Electric Company, Donald Bently devoted more time to the development of externally pressurized bearings. Externally pressurized bearing technology solves an environmental problem with a simple, reliable, and highly efficient bearing that can actually improve the rotordynamic performance of many types of high- and low-speed machinery. Although used previously only on hydro turbines, this technology holds real potential for use in water-injected twin-screw compressors and possibly, certain types of centrifugal process gas compressors. This is why the reader needs to become acquainted with the concept.

13.6.2 Fluid-Induced Instability

Fluid-induced instability can occur whenever a fluid, either liquid or gas, is trapped in a gap between two concentric cylinders, one of which is rotating relative to the other. This situation exists when any part of a rotor is completely surrounded by fluid trapped between the rotor and the stator: for example, in fully lubricated (360° lubricated) fluid-film bearings, around impellers in pumps, or in seals. Fluid-induced instability typically manifests itself as large-amplitude, usually subsynchronous vibration of a rotor. This vibratory excursion can cause rotor-to-stator rubs on seals, bearings, impellers, or other rotor and stator parts. The vibration can also produce large-amplitude alternating stresses in the rotor, creating a fatigue environment that can result in a shaft crack. Fluid-induced instability is a potentially damaging operating condition that must be avoided.

During the 1980s, Don Bently and Agnes Muszynska showed that whirl and whip fluid-induced instabilities were actually manifestations of the same phenomenon, not separate

---

* Contributed by Don Bently and Carlo Luri, Bently Pressurized Bearing Company, www.bpb-co.com.

malfunctions, as previously believed. This groundbreaking work, modeling the two malfunctions in a single harmonized modern algorithm, was summarized in the April 1989 issue of the Bently-Nevada publication *Orbit* [1].

Fluid-induced instability can originate in bearings or seals, but occurs most often in fluid-film bearings. It appears suddenly and without warning as the rotor speed reaches a particular threshold speed, which the Bently Pressurized Bearing Company appropriately calls the *Bently–Muszynska threshold of instability.* Through rotor stability analysis, we can obtain a very useful expression for the threshold of instability, Ω_{th}:

$$\Omega_{\text{th}} = \frac{1}{\lambda}\sqrt{\frac{K}{M}} \tag{13.1}$$

where λ is the fluid circumferential *average* velocity ratio, a measure of fluid circulation around the rotor; K is the rotor system spring stiffness; and M is the rotor system mass.

There is an important point regarding this equation: If the rotor speed is less than Ω_{th}, the rotor system will be stable. Or to look at it another way, if Ω_{th} is above the operating speed, the rotor system will be stable. Thus, to ensure rotor stability, all we have to do is keep the threshold of instability above the highest anticipated machine operating speed.

Rotor dynamic stability analysis itself is a separate topic, best performed using a technique called *root locus analysis*. Pioneered by Walter Evans, a brilliant control systems engineer, root locus represents one of the most important contributions ever introduced to the field of control. It is covered in Evans's own text [2] as well as in numerous other modern texts [3–5].

Externally pressurized bearings counteract fluid-induced bearing instability. Also, pressurized water bearings are ideal for certain hydraulic turbines and hold great promise for water-injected screw compressors. Whereas oil whirl can often be handled by bearing stiffness modifications, the same fix may not work for its cousin, oil whip. Oil whip–related instabilities cannot generally be addressed by bearing stiffness modifications, but must be addressed by rotor stiffness changes instead. In this segment of the book, we relate Bently's approach to using externally pressurized bearings as midspan seals to effectively eliminate whip. With externally pressurized bearings, there is no longer any reason for a machine to suffer from either whirl or whip.

Controlling Lambda One way that the threshold of instability is commonly raised is to reduce λ. It can be seen from Eq. (13.1) that if we reduce λ, we will increase Ω_{th}. The fluid circumferential average velocity ratio λ is a measure of the amount of fluid circulation in the bearing or seal. Hence, it can be influenced by the geometry of the bearing or seal, the rate of end leakage out of the bearing or seal, the eccentricity ratio of the rotor in the bearing or seal, and the presence of any pre- or antiswirling that may exist in the fluid. Fluid-induced instability originating in fluid-film bearings is commonly controlled by bearing designs that break up circumferential flow. Examples of such bearings include tilting pad, lemon bore, elliptical, and pressure dam bearings. The value λ can also be reduced by antiswirl injection of fluid into the offending bearing or seal.

Controlling Stiffness Fluid-induced instability can also be eliminated by increasing the rotor system spring stiffness, K. Before we show how an externally pressurized bearing or seal can be used to control fluid-induced instability by increasing K, we need to discuss how the various sources of spring stiffness combine to produce the symptoms of whirl and whip.

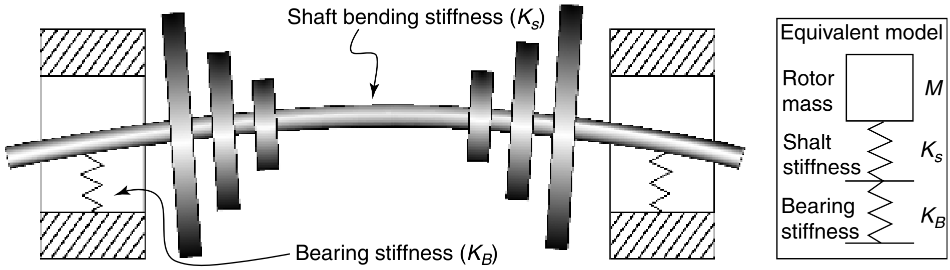

FIGURE 13.21 Series spring combination with mass.

Spring Model A flexible rotor can be thought of as a mass that is supported by a shaft spring, which in turn is supported by a bearing spring (Fig. 13.21). Thus, K actually consists of two springs in series, the shaft spring, K_S, and the bearing spring, K_B. For these two springs connected in series, the stiffness of the combination is given by these equivalent expressions:

$$K = \frac{1}{1/K_S + 1/K_B} = \frac{K_B}{1 + K_B/K_S} = \frac{K_S}{1 + K_S/K_B} \tag{13.2}$$

For any series combination of springs, the stiffness of the combination is always less than the stiffness of the weakest spring: The weak spring controls the combination stiffness. For example, assume that K_B is significantly smaller than K_S. Thus, K_S is much larger than K_B, and the term following the second equals sign can be used. As K_S becomes relatively large, K becomes approximately equal to K_B. For this case, the system stiffness, K, can never be higher than K_B; in practice, it will always be less. A similar argument can be used with the rightmost equation when K_B is relatively large compared to K_S; the system stiffness will always be lower than K_B.

13.6.3 Eccentricity and Stiffness

Let's assume that the source of the fluid-induced instability is a plain cylindrical, hydrodynamic bearing, an example of an *internally pressurized bearing.* Typically, when the journal is close to the center of the bearing (the eccentricity ratio is small), the bearing stiffness is much lower than the shaft stiffness. In that case, the ratio K_B/K_S is small, and the term following the second equals sign of Eq. (13.2) tells us that the combination stiffness is a little less than K_B. In other words, at low eccentricity ratios, the bearing stiffness is the weak stiffness and controls the combination stiffness.

On the other hand, when the journal is located relatively close to the bearing wall (the eccentricity ratio is near 1), the bearing stiffness is typically much higher than the rotor shaft stiffness. Because of this, the ratio K_S/K_B is small. Then the term following the third equals sign of Eq.(13.2) tells us that the combination stiffness is a little less than K_S. Thus, at high eccentricity ratios, the shaft stiffness is the weak stiffness and controls the combination stiffness.

Fluid-induced instability *whirl* begins with the rotor operating relatively close to the center of the bearing. The whirl vibration is usually associated with a rigid body mode of the rotor system (Fig. 13.22*a*). During whirl, the rotor system precesses at a natural frequency that is controlled by the softer bearing spring stiffness.

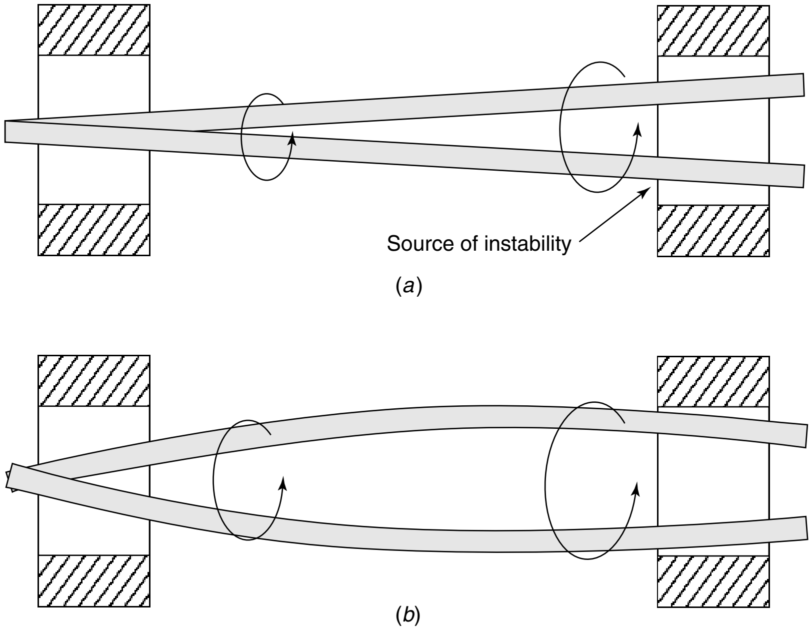

FIGURE 13.22 (*a*) Conical whirl mode shape; (*b*) bending whip mode shape.

Whip is an instability vibration that locks to a more or less constant frequency. The whip vibration is usually associated with a bending mode of the rotor system (Fig. 13.22*b*). In this situation, the journal operates at a high eccentricity ratio, and K_B is much higher than K_S. K_S is the weakest spring in the system and controls the natural frequency of the instability vibration.

To summarize, at low eccentricity ratios, the bearing stiffness controls the rotor system stiffness. Therefore, any changes in bearing stiffness will show up immediately as changes in the overall rotor system spring stiffness, K. On the other hand, at very high eccentricity ratios, the constant shaft stiffness is in control, and the overall rotor system spring stiffness will be approximately independent of changes in bearing stiffness.

13.6.4 Externally Pressurized Bearings and Seals

Conventional hydrodynamic bearings generate the rotor support force through the dynamic action of fluid drawn around by the rotation of the shaft journal. For that reason they are called internally pressurized bearings (Fig. 13.23). These bearings are normally designed to operate in a partially lubricated condition. They are vulnerable to fluid-induced instability problems because they can become fully lubricated if the shaft journal operates at a low eccentricity ratio, as can happen due to misalignment or an unanticipated high radial load.

Externally pressurized bearings operate in a fully lubricated condition by design. The spring stiffness of these bearings depends strongly on the pressure of the lubricating fluid supplied to the bearing. This pressure is generated by an external pump: hence, the name. By varying the pressure supplied to the bearing, it is possible to control the spring stiffness of the bearing, providing the possibility of variable stiffness control of a machine.

Seals can also act like bearings and have been responsible for triggering fluid-induced instabilities, even in machines supported by instability-resistant bearing designs, such as tilting

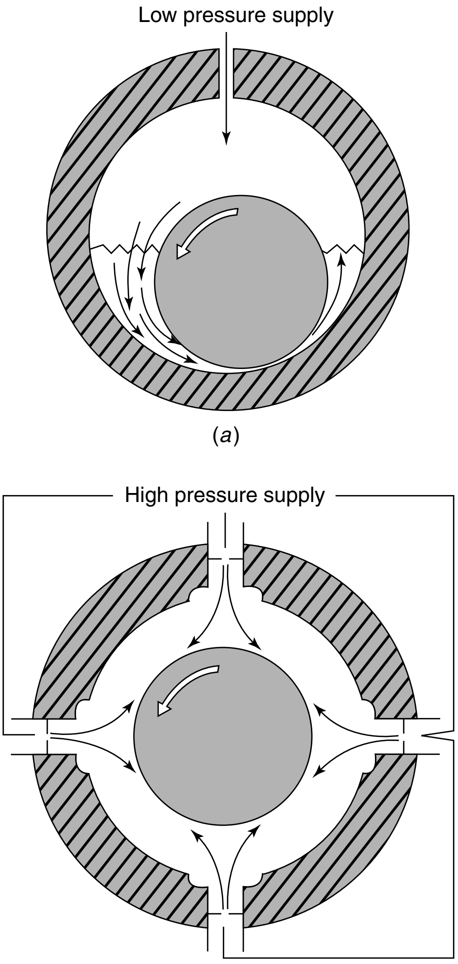

(*a*)

(*b*)

FIGURE 13.23 Cross sections of (*a*) hydrodynamic (internally pressurized) and (*b*) externally pressurized bearings.

pad bearings. Seals can also be externally pressurized with either gas or liquid, and they present the same possibilities for variable-stiffness operation.

Ironically, the use of external pressurization in bearings occurs worldwide, especially in Europe, as many large machines use jacking oil to lift the rotor during startup, before rotative speed can develop a self-sustaining oil wedge. Unfortunately, it is widely believed that external pressurization at operating speeds degrades, rather than enhances, rotor dynamic stability. For this reason, the *jacking oil* pressure is removed once the rotor reaches an appropriate rotative speed. As shown here, external pressurization of a properly designed bearing *enhances* stability and can *eliminate* whirl and whip. Thus, externally pressurized bearings and seals offer a new approach to the control of fluid-induced instability.

In *whirl*, the bearing stiffness is the weak stiffness of the system. We can increase the pressure of an externally pressurized bearing, increasing the bearing spring stiffness, K_B, and the system spring stiffness, K. The result is an increase in the threshold of instability, Ω_{th}. Thus, it is possible to design a rotor system using externally pressurized bearings that prevent fluid-induced instability whirl.

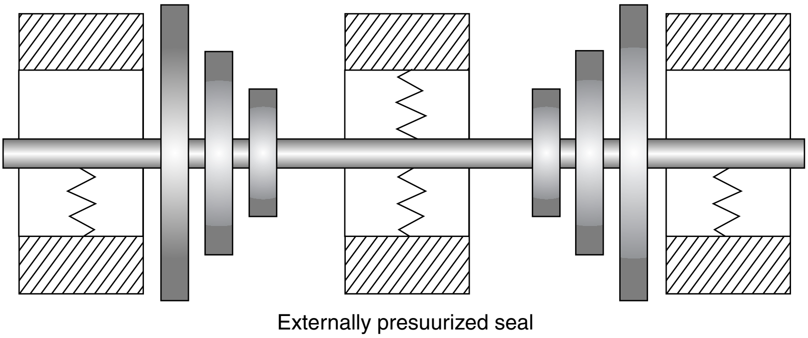

FIGURE 13.24 Side view of a rotor system with an additional spring at the midspan seal location.

In *whip*, the bearing stiffness is very high, and the shaft stiffness, K_S, is the weak spring in the system. In this situation, increasing the bearing pressure and stiffness *will have no effect* on the overall system spring stiffness, K. It is controlled by the shaft stiffness, which cannot be changed. However, we *can* add an additional spring to the system that acts *in parallel with* the shaft spring. This can be done by pressurizing a seal at or near the midspan of the rotor shaft (Fig. 13.24).

The total stiffness of two springs in parallel is simply the sum of the two stiffnesses. With an externally pressurized center seal with stiffness K_{seal}, Eq. (13.2) becomes

$$K = K_{\text{seal}} + \frac{1}{1/K_S + 1/K_B} = K_{\text{seal}} + \frac{K_S}{1 + K_S/K_B} \tag{13.3}$$

Thus, increasing K_{Seal} has the effect of increasing directly K and increasing the threshold of instability, Ω_{th}. Pressurizing the seal is equivalent to increasing the stiffness of the rotor shaft.

These two approaches to instability control follow the same basic principle: The stiffness of the weakest component is increased using externally pressurized bearing or seal technology. In whirl, the relatively weak bearing is stiffened; in whip, the relatively weak shaft is stiffened. Externally pressurized bearings and seals offer one additional technical advantage. The working fluid can be injected radially or tangentially. If fluid is injected tangentially against rotation (antiswirl injection), λ is reduced. This has a direct and positive effect on rotor system stability. Antiswirl injection is easy to design into an externally pressurized application.

By applying all of these approaches in the design of a machine, it is relatively easy to produce a machine that is immune to fluid-induced instability problems. This has been demonstrated both in the lab and in public venues by Bently Rotor Dynamics Research Corporation. Through the use of externally pressurized bearings and seals, both whirl and whip can be eliminated *without* introducing the disadvantages inherent in other commonly applied technologies or approaches, such as tilting pad bearings, intentional misalignment (including gravity), and sleeve bearing variations, such as tapered land, lemon bore, pressure dam, and others. These approaches introduce other problems (moving parts to wear out, greater mechanical losses, increased machine stress), and none are able to address whip instabilities. In addition, externally pressurized bearing and/seal technology provides advantages far beyond the elimination of whirl and whip and can replace other bearing types, such as magnetic and rolling element, overcoming their numerous disadvantages. It can be used to provide a variable-stiffness machine, easily adjusted in the field manually or using automatic controls it can be used with a variety of working fluids (gas or liquid), allowing "oil-free" operation, sometimes with the process gas itself; it allows greater use of vertical machine designs rather than primary reliance on horizontal designs, which use gravity as a stabilizing preload; and it can be used at very slow rotational speeds since it does not depend on rotation to develop a supporting fluid wedge. These observations allow us to consider practical applications next.

13.6.5 Practical Applications

Low-pressure oil-lubricated hydrodynamic bearings were specified 100 years ago as original equipment on Southern California Edison's hydro turbines. Although low-pressure oil bearings have been adequate for this and many other installations, the advent of stricter environmental regulations and the cost of safety, health, and environmental compliance make continued use of these bearings in any hydro turbine application a risky proposition. Recent improvements have allowed water-lubricated externally pressurized bearings to replace oil-lubricated hydrodynamic (internally pressurized) bearings in many applications. For the water power industry, the primary advantage of externally pressurized bearings is the option to use an environmentally benign fluid such as water for lubrication without loss of load-carrying capacity, efficiency, or reliability. A properly engineered externally pressurized bearing also results in better stability and control of the vibration response to dynamic forces acting on the rotor.

Hydrostatic lubrication applied to journal bearings can support load even with little or no relative motion between the rotating and stationary parts of the bearing because it uses external pressure to form the supporting layer of fluid. A modern example is high-pressure jacking oil systems (usually, Vickers pumps) used to reduce wear during the slow-speed startup phase of large turbines. Hydrostatic journal bearings are fully lubricated around 360° of the bearing surface and tend to operate at relatively low eccentricity (near the center of the bearing clearance).

As technology advanced and rotating speeds increased in the early twentieth century, many machines exhibited unstable behavior and high vibration. Experiments showed that flooding simple sleeve bearings with lubricant caused the bearings to exhibit instabilities. These fluid instabilities became known as whirl and whip phenomena. Whirl and whip instabilities are characterized by high subsynchronous vibrations commonly occurring at a frequency just below 50% of running speed.

Since fluid instability was associated with flooded bearings, it was erroneously assumed that a fully lubricated hydrostatic bearing would be inherently unstable. To improve stability, bearings were operated partially lubricated at low pressure. High-pressure hydrostatic lubrication was avoided for all but the slowest-speed applications. Over time, several features, such as the axial groove, elliptical, offset half, pressure dam, and tilt pad, were added to the plain hydrodynamic journal bearing to raise the instability threshold. These features helped but were never able to fully solve the problem of fluid instability.

13.6.6 Rotor Model, Dynamic Stiffness, and Fluid Instability

Rotor systems can be modeled as spring systems using *Hooke's law,* which states that the static displacement of a spring is directly proportional to the force applied ($F = Kd$). Dynamic rotating systems are a little more complex than simple static spring systems, where the stiffness is represented by a single spring constant (K). On a rotating shaft where the rotor mass is supported by fluid bearings, the radial motion can be represented by

$$r = \frac{\Sigma \mathrm{F}}{\mathrm{DS}} \tag{13.4}$$

where r = radial displacement or vibration vector
ΣF = sum of the force vectors
DS = dynamic stiffness vector

Because we are operating in a rotating system, we define the quantities in polar coordinates. Each term can be described by a vector with magnitude r and phase angle δ. If we trace the value of r over time, we obtain an orbit plot that represents the path that the shaft centerline takes through space. In practice, the orbit can be monitored using two orthogonally mounted proximity probes near the shaft surface. A Keyphasor signal gives us a once-per-turn reference point that can be superimposed on the orbit to give us important information about the phase angle of the vibration vector.

The sum of the force vectors includes all of the forces acting on the rotor system. These forces can be static (unchanging in direction and time) or dynamic (exhibiting changes in magnitude or direction with time). Common examples of forces on rotor systems are gravity (static force) and unbalance (dynamic force).

The dynamic stiffness is derived from *Newton's second law*: The sum of forces acting on a body equals the mass times the acceleration. By making certain assumptions (the rotor system parameters are isotropic, gyroscopic and fluidic inertial effects can be ignored, and linearity), we can create a simplified equation of motion based on a free-body diagram (Fig. 13.25). The free-body diagram shows a rotor with mass M rotating at a speed Ω in a direction X to Y. The displacement from equilibrium is represented by the term r, velocity by the term $\dot{r}$ and acceleration by the term $\ddot{r}$. The spring term F_S points back toward the equilibrium position, the damping term F_D acts opposite to the velocity vector and the tangential stiffness force F_T acts at 90° from the displacement vector, $\mathbf{r}$, in the direction of rotation. The perturbation

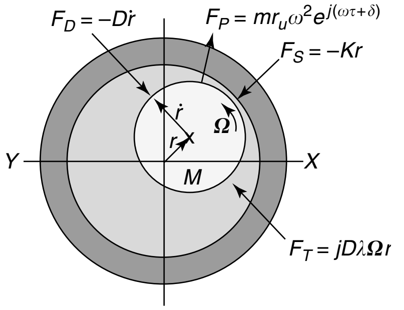

FIGURE 13.25 Free-body diagram for a simple rotor system.

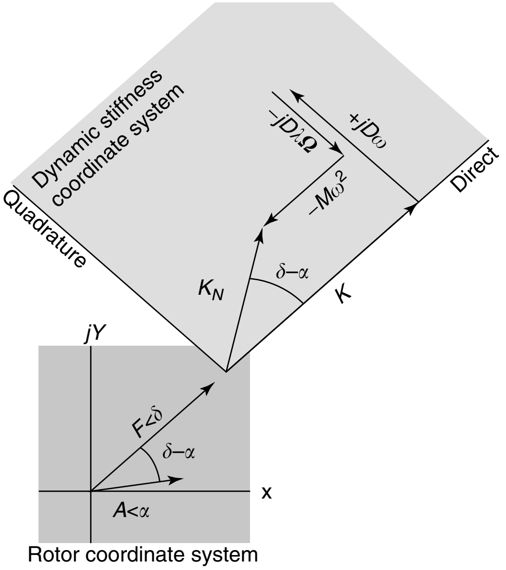

FIGURE 13.26 Representation of dynamic stiffness using vectors.

force F_P is shown acting at angular position δ at frequency ω. The term mr_u represents the unbalanced mass (m) operating at distance (r_u) from the center of the rotor. Newton's second law sets the sum of these forces equal to the mass M times the acceleration. Rearranging this equation to solve for dynamic stiffness results in the following:

$$\mathrm{DS} = K - M\omega^2 + jD\omega - jD\lambda\Omega \tag{13.5}$$

As shown in Fig. 13.26, dynamic stiffness can be viewed as the sum of four vectors. The four components of dynamic stiffness can be described in physical terms. The first term, K, is the simple spring constant. The positive value of K indicates that it acts opposite to the direction of applied force. The second term, $-M\omega^2$, is the mass stiffness that occurs because of the inertia of the rotor. The fact that this term is negative indicates that it has a destabilizing effect on the rotor system. Both of these terms are known as *direct terms* because they act parallel to the direction of applied force. The third and fourth terms used in this equation are known as *quadrature terms*. These terms are preceded by the symbol j to indicate that they act at 90° to the direction of applied force. The term $jD\omega$ is the fluid damping term. The fluid damping term is positive, indicating that it has a stabilizing effect on the rotor. The tangential stiffness term, $-jD\lambda\Omega$, acts opposite to the damping term and is potentially destabilizing. The tangential stiffness term is proportional to the fluid circumferential average angular velocity $\lambda\Omega$.

The tangential stiffness term introduces to our rotor model the term λ (lambda), which describes the fluid circulation around the circumference of the bearing journal. Whenever a viscous fluid is contained between two surfaces moving at different velocities, the fluid will be dragged into relative motion. Because of friction, the relative velocity of the fluid at the surfaces will be zero. Because the surfaces are moving at different rates, the fluid will develop a velocity profile similar to the one represented in Fig. 13.27.

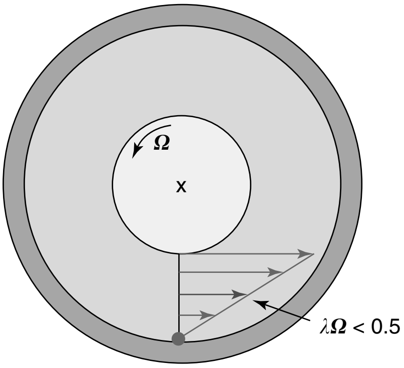

FIGURE 13.27 Average fluid angular velocity represented by λΩ.

Returning to the equation for radial position of our spring–mass–damper system,

$$r = \frac{\Sigma F}{\mathrm{DS}} \tag{13.4}$$

the maximum displacement will occur when the value of dynamic stiffness is small for any nonzero value of applied force. *Instability*, defined as the threshold where r becomes bounded only by the mechanical constraints of the system and nonlinear effects, occurs when the value of the dynamic stiffness in our model equals zero. Because the dynamic stiffness consists of both direct and quadrature terms, this condition is satisfied when $K = \mathrm{M}\omega^2$ and $\omega = \lambda\Omega$. Combining these two conditions results in the Bently–Muszynska formula for the threshold of instability:

$$\Omega_{\mathrm{th}} = \frac{1}{\lambda}\sqrt{\frac{K}{M}} \tag{13.6}$$

This simple equation provides an excellent starting point for comparing the stability of a variety of fluid bearing designs. As mentioned earlier, the Bently–Muszynska model predicts that the stiffer the bearing support and the lower the value of λ, the higher the threshold of instability or stability margin.

13.6.7 Root Locus Stability Analysis

The best way to evaluate the stability of rotor systems and bearing designs is to use the graphical technique known as the *root locus method*, which graphs the roots of the following characteristic equation of the rotor system:

$$M\ddot{r} + D\dot{r} + (K - jD\lambda\Omega)r = 0 \tag{13.7}$$

The solution of the characteristic equation takes the following exponential form:

$$r = Re^{st} \tag{13.8}$$

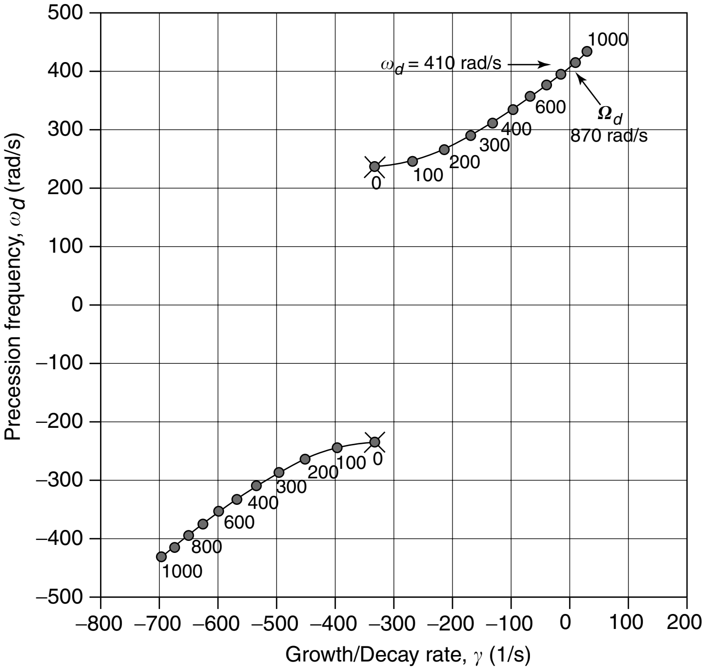

FIGURE 13.28 Root locus plot showing the forward and reverse precession roots.

Solving for s when R, λ, and Ω are nonzero, we obtain two complex roots:

$$S_1 = r_1 + j\omega_d \quad \text{and} \quad S_2 = r_2 - j\omega_d \tag{13.9}$$

Because the solution for r (displacement) has an exponential form, values will grow unbounded with time when γ is positive and decay when γ is negative. Negative γ roots indicate that the rotor system is stable and will return to an equilibrium position when disturbed. Positive γ indicates instability; no real machine can operate in the region of instability. When γ is equal to zero, r will remain constant. This represents behavior at the threshold of instability. Figure 13.28 shows a typical root locus plot over a range of operating speeds from 0 to 1000 rad/s. Based on this plot, the threshold of instability is predicted to be 870 rad/s. Root locus plots can be used to evaluate the effect on stability for a wide range of machine parameters, making it an extremely useful tool for rotordynamic analysis.

13.6.8 More About Externally Pressurized Bearings

In contrast with hydrodynamic bearings, which rely on the relative motion between the rotating journal and stationary bearing to create a pressure wedge to support the load of the shaft, externally pressurized bearings (EPBs) rely on an externally generated source of pressure. Therefore, they have several unique features and advantages that make them superior to low-pressure hydrodynamic journal bearings and even the latest modified geometry bearings, such as the lobed and tilt-pad bearings.

The distance to the bearing wall is measured by the eccentricity ratio (0 represents a centered journal, 1 a journal touching the bearing wall). As shown in Fig. 13.29, a hydrodynamic

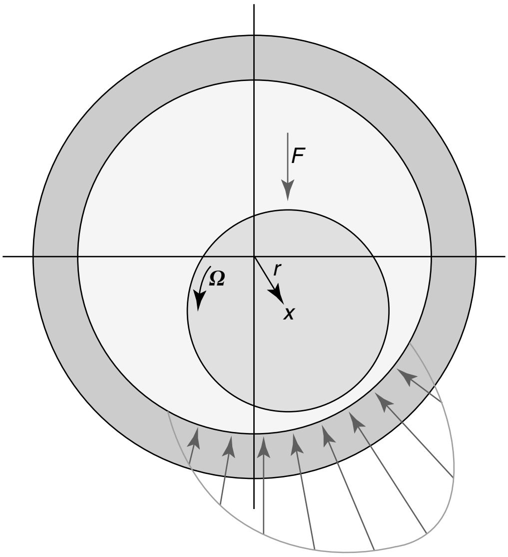

FIGURE 13.29 Pressure wedge supports the load of a hydrodynamic bearing operating at high eccentricity.

sleeve bearing must operate off center to create the pressure wedge that supports the bearing load. The stiffness of the hydrodynamic bearing is lowest when the eccentricity ratio is near zero. Misalignment during installation or changing radial loads can result in a hydrodynamic bearing that is forced to operate at low eccentricity ratio and low stiffness. Since we showed earlier that the threshold of instability and the vibration response are related to stiffness, a normally stable hydrodynamic bearing can have problems when operating at a low eccentricity ratio. A partially lubricated hydrodynamic bearing (which would have a low λ value) can become fully flooded at low eccentricity ratio, resulting in an increase in λ.

Because its stiffness derives from external pressure, an EPB can retain good stiffness and damping properties even at a low eccentricity ratio. The relationship between eccentricity ratio and bearing stiffness for several bearing types is shown in Fig. 13.30. Although both the EPB and the hydrodynamic bearings have good relative stiffness at high eccentricity, only the EPB retains its stiffness at zero eccentricity. A pure hydrostatic bearing operating at very slow speed has good stiffness at zero eccentricity but does not have the advantage of hydrodynamic lubrication at high eccentricity.

The superior stiffness value of an EPB makes it less prone to instability even when subject to misalignment, changing radial loads, or operation at low eccentricity. This feature makes the EPB ideal for installation on the vertical machines used in many large hydro installations. In vertical hydro turbines, the lack of gravity side load makes it possible for the hydrodynamic guide bearing journals to be forced to operate at low eccentricity. This is often the case during transient loading conditions that occur during startup or shutdown.

Figure 13.31 shows the typical pressure profile of a four-pocket EPB design. The pressure profile around the EPB differs from that of the low-pressure bearing because it acts around 360° of the circumference. The unique feature of the EPB is the pressure profile that acts along the longitudinal axis of the bearing. This axial pressure gradient drives flow out

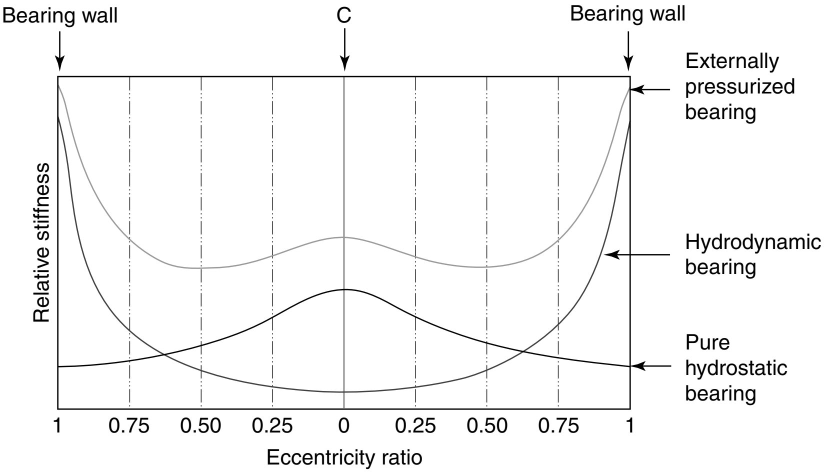

FIGURE 13.30 Relative stiffness as a function of the eccentricity ratio.

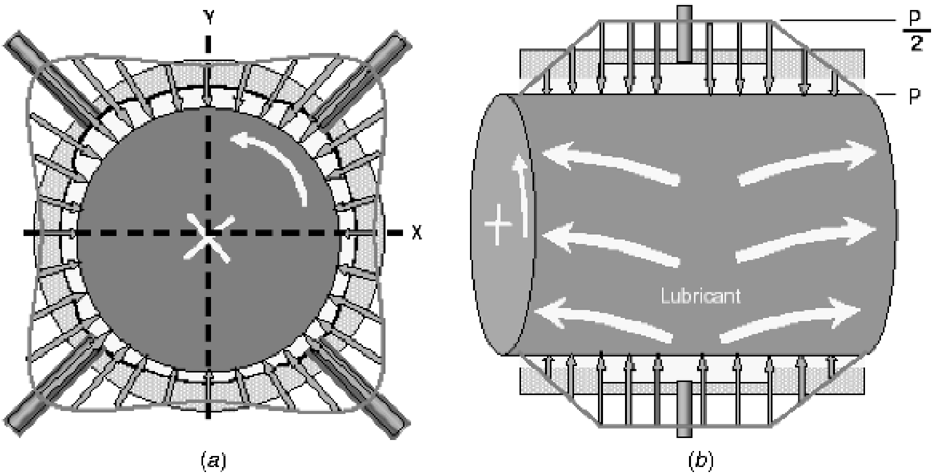

FIGURE 13.31 Pressure profile of a four-pocket externally pressurized bearing around the circumference (end view, *a*) and along the longitudinal axis *(b). p/2* is the supply pressure and *p is the ambient pressure at the exit or 0 psig.*

of the end boundaries of the bearing geometry, effectively reducing λ (the average circumferential velocity ratio).

External pressurization controls stiffness and λ, the two parameters that contribute directly to the stability of the bearing. Not only are these two parameters controllable during the bearing design process but they are also controllable by the operator online. The properties of the bearing can be changed after installation by changing the external supply pressure (stiffness and λ) or the supply temperature (damping).

Almost all types of hydrodynamic bearings in use today rely on petroleum-based lubricating oils. Physical properties of lubricating oils facilitate formation of the pressure wedge

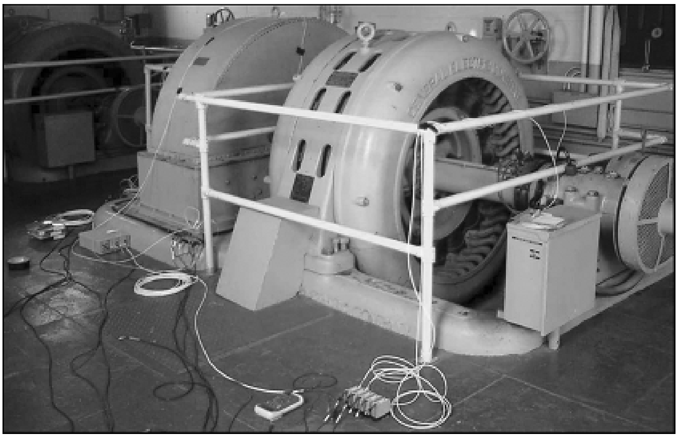

FIGURE 13.32 Pelton wheel (left) and generator (right) instrumented with temporary proximity probes for diagnostic analysis.

that supports the load in an internally pressurized bearing. Water has poorer lubricant properties and does not work well in hydrodynamic bearings.

An EPB can operate with conventional petroleum lubricants but can also operate with other incompressible fluids, such as water. Water can be used to support load in the EPB because the internal pressure profile is dependent on an external pressure source and not primarily on the relative motion between bearing and journal. The EPB makes it possible to choose a bearing fluid not solely on its lubricant properties but also for its compatibility with the process and the environment.

In hydropower applications, two convenient sources of pressurized water can be used to supply the EPB. If a clean water source with sufficient head is available from the penstock, it may be used to supply the EPB. Typically, filtration in the range 3 to 5 μm is necessary to protect the close tolerances of the EPB. The pressure necessary for EPB operation must be calculated by the bearing designer on a case-by-case basis. Typically, the pressure needed is in the range 150 to 1000 psi, or between 350 and 2300 ft of static head.

If a suitable source of water is not available from the environment, pressurized water can be produced by a closed-loop fluid delivery system. This system is composed of several components, typically a high-pressure pump, a high-pressure filtration unit, and a low-pressure pump and heat exchanger on a kidney loop to control the fluid temperature. Sensors are employed to monitor the fluid temperature, pressure, and flow. Controls and interlocks can be employed to ensure that the bearing is operating at the desired design conditions. A pressurized accumulator is generally employed to allow for controlled shutdown of the machine should the system for any reason experience a sudden loss of pressure.

13.6.9 Field Data Collection

To obtain baseline data for the hydrodynamic oil bearings, field data were collected from a hydro turbine at Southern California Edison's Lytle Creek generating facility. A typical machine train is composed of two major components: a Pelton waterwheel and a General Electric three-phase generator (Fig. 13.32). The generator and Pelton wheel are mounted on a common horizontal shaft supported by three bearings. Bearing 1 is located outboard of the Pelton wheel, bearing 2 is located between the Pelton wheel and the generator, and bearing 3 is located outboard of the generator.

The bearings appear to be those supplied with the original equipment. They utilized soft metal babbitt faces with diagonal grooves to help distribute the oil. Soft metal is used to avoid damaging the shaft on startup and shutdown. A leather slinger was employed on the shaft to contain the oil in the bearing pedestal. Based on nameplate information, it appears that the Pelton wheel and generator were manufactured in 1909.

A common occurrence on these types of machines is oil leakage from the bearing pedestals. This problem is prevalent at bearing 2, which is in close proximity to the Pelton wheel (Fig. 13.33). The housing of the Pelton wheel operates under slight vacuum, causing oil to be sucked into the water discharge. Bearing 2 also carries most of the load of the machine. For these reasons, it was decided to replace the hydrodynamic oil bearing in the middle of the machine with an externally pressurized water bearing.

Because of the historical nature of these machines, Southern California Edison requested that no external modifications be made to the bearing pedestals. The EPB retrofit, which consisted of new bearings and "backers", was designed to fit inside the original pedestal, with small penetrations for pressurized water delivery and return.

The properties of the original oil bearing are as follows:

• Length	18 in.
• Diameter	6 in.
• Bearing construction	Babbitt-lined steel with diagonal oil grooves

The field data collected from this machine revealed no surprises. The machine appeared to be well behaved and exhibited rotor dynamic data consistent with a heavy, slow-speed horizontal machine. Proximity probes mounted near the bearing housings and a once-per-turn

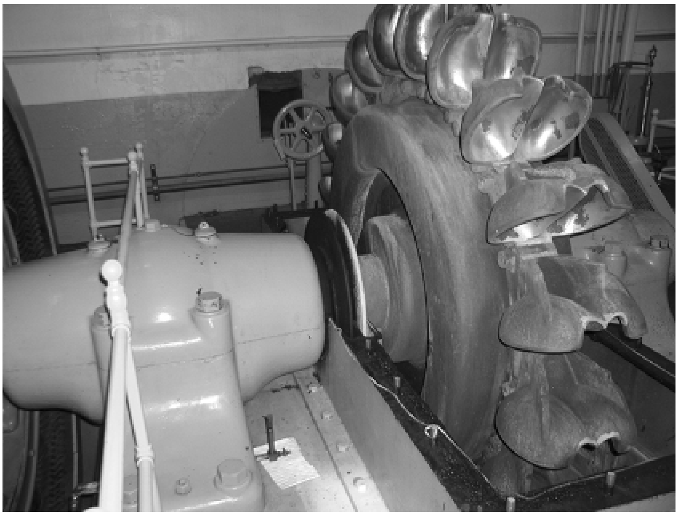

FIGURE 13.33 Center pedestal (bearing 2) in close proximity to the Pelton wheel (right).

Keyphasor signal were used to generate the orbit plot shown in Fig. 13.34. This plot shows the filtered 1X (synchronous) vibration, a nearly circular orbit with 0.002 in. (2-mil) peak-to-peak vibration. Field data from bearing 2 was difficult to interpret, due to axial movement over a taper in the shaft at the probe locations. Field data from bearing 1 were reported as representative of the shaft vibration.

The data plot shown in Fig. 13.35 is a transient data plot showing the average shaft centerline position from startup to operating speed. This reveals a moderate rise in the shaft centerline from −1.5 mil (−0.0015 in.) to + 0.5 mil (0.0005 in.) over a speed range consistent with hydrodynamic bearing performance.

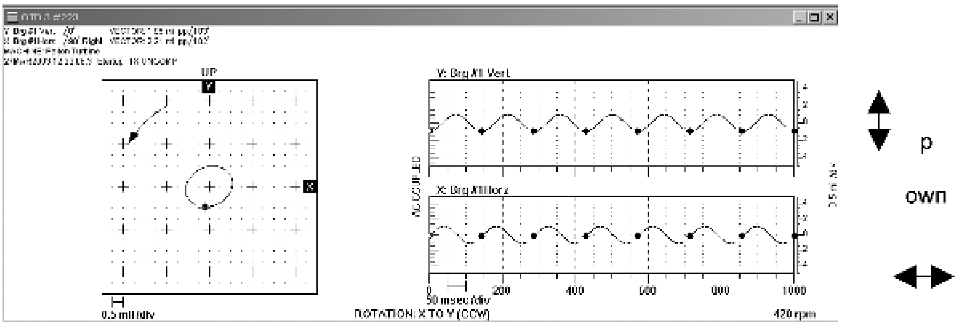

FIGURE 13.34 1X orbit plot from bearing 1 *(outboard of Pelton wheel).*

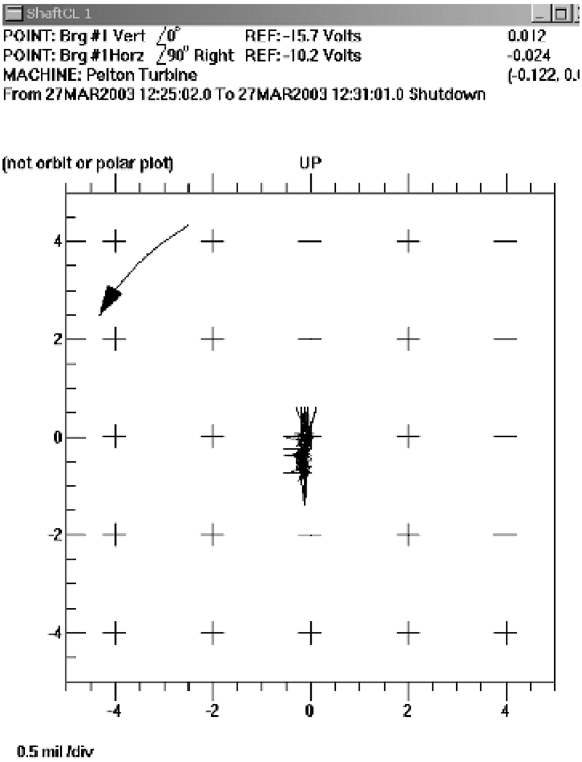
ShaftCL 1

POINT: Brg #1 Vert ∠0° REF: -15.7 Volts 0.012
POINT: Brg #1 Horz ∠90° Right REF: -10.2 Volts -0.024
MACHINE: Pelton Turbine (-0.122, 0.
From 27MAR2003 12:25:02.0 To 27MAR2003 12:31:01.0 Shutdown

FIGURE 13.35 Average shaft centerline position of the original oil bearing.

13.6.10 Test Stand Data

To validate the pressurized water bearing design, a nearly full-scale model of the turbine generator machine train was constructed in Minden, Nevada (Fig. 13.36). The original number 2 bearing pedestal from Southern California Edison's Mill Creek site was used to support a pressurized water bearing and replacement backer. The simulated machine train uses two rotating wheels, with a weight of 3300 lb each, to model the turbine and generator. The total rotating weight with shaft is close to 8000 lb. The shaft is driven by a variable-speed electric motor at 450 rpm. Two roller bearings are used on either side of the wheels to simulate bearings 1 and 3.

The test stand pressurized water bearing was designed to carry slightly more than half the total load. Pressurized water is generated by a closed-loop fluid delivery system that supplies 15-gpm flow at 700 psi. The properties of the pressurized water bearing are as follows:

• Length	14 in.
• Diameter	6 in.
• Bearing construction	Bronze

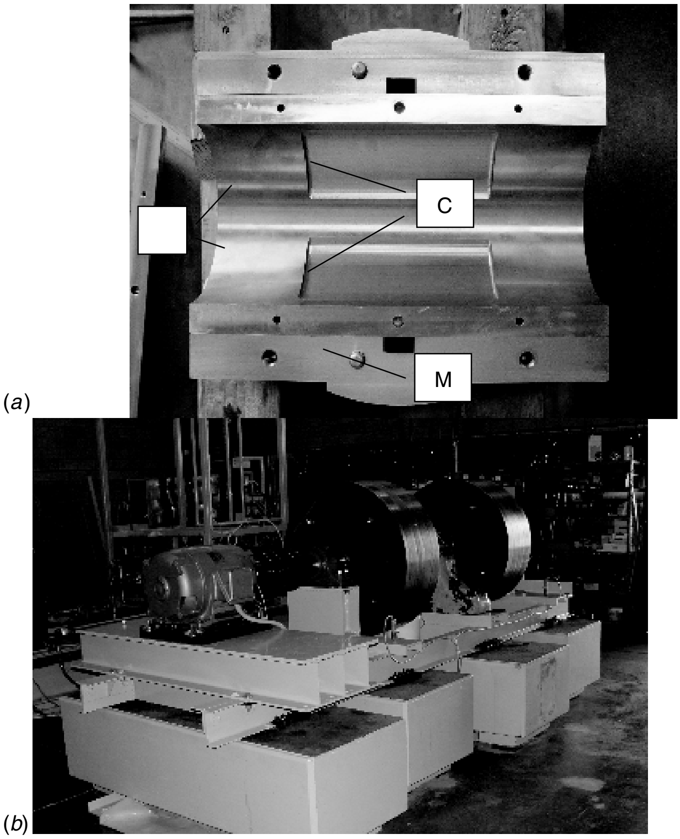

FIGURE 13.36 (*a*) Upper half of the pressurized water bearing (the lower half is similar). Note the hydrostatic pockets, orifice locations, and pressurized water manifold. (*b*) Bearing test stand in Minden, Nev.

Data collected from the test stand are shown in Figs. 13.37 and 13.38. The 1X filtered orbit shows a very small peak-to-peak vibration of about 1 mil (0.001 in. or 0.025 mm). About 4 lb (1.8 kg) of unbalance mass was added to the drive-end wheel diameter to obtain this vibration amplitude. Vibration without the unbalance mass (not shown) was almost undetectable. These data were used to calculate the stiffness value for the pressurized water bearing. The stiffness was estimated at 900,000 lb_f/in., significantly higher than the value of the original hydrodynamic oil bearing.

Similarly, the shaft centerline plots show very little change in position of the shaft centerline (shaft eccentricity) from startup through running speed. Analysis of the full-spectrum vibration plots (not shown) verifies that no abnormal subsynchronous vibrations are present in the operating data. The data collected confirm that an EPB can operate near zero eccentricity with excellent stiffness and no sign of fluid instability.

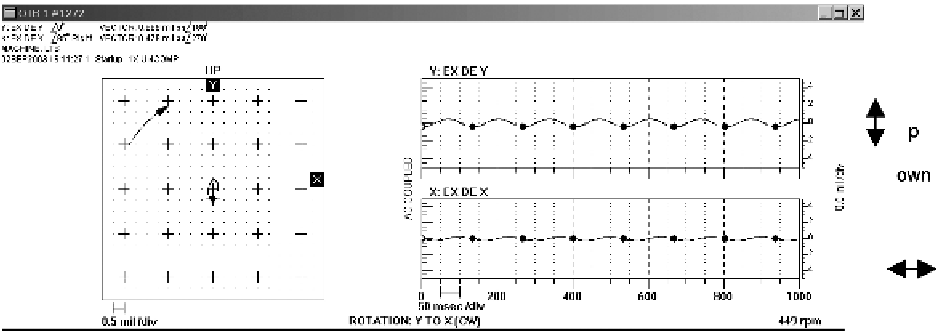

FIGURE 13.37 Shaft orbit at the drive-end (DE) side of the bearing 2 pedestal.

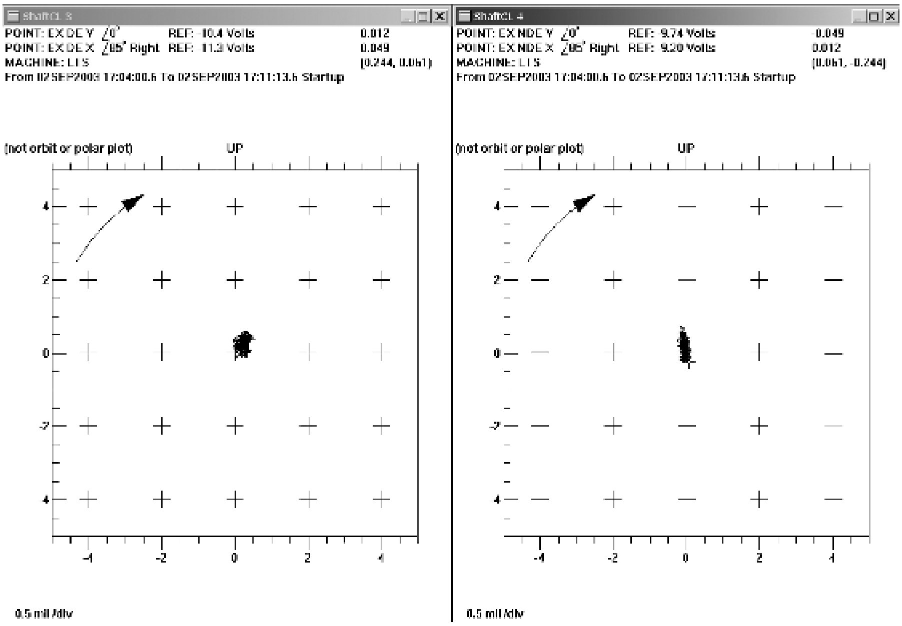
ShaftCL 3

POINT: EX DE Y ∠0° REF: -10.4 Volts 0.012
POINT: EX DE X ∠85° Right REF: -11.3 Volts 0.049
MACHINE: LTS (0.244, 0.061)
From 02SEP2003 17:04:00.6 To 02SEP2003 17:11:13.6 Startup

ShaftCL 4

POINT: EX NDE Y ∠0° REF: 9.74 Volts -0.049
POINT: EX NDE X ∠85° Right REF: 9.20 Volts 0.012
MACHINE: LTS (0.061, -0.244)
From 02SEP2003 17:04:00.6 To 02SEP2003 17:11:13.6 Startup

FIGURE 13.38 Shaft average centerline plot of test stand bearing 2.

13.6.11 Conclusions

Externally pressurized bearings solve the age-old problem of fluid bearing instability. Century-old principles of hydrostatic bearing lubrication are applied in a manner that enhances bearing stiffness and reduces λ. In doing so, the externally pressurized bearing can positively influence the two bearing factors that have the greatest impact on the stability of rotating machinery.

By solving the problem of fluid instability, machine designers and operators can apply the technology in numerous new and existing rotating machinery applications. It is thus evident that reliability-focused and environment-conscious users are in a position to take advantage of the numerous benefits the product has to offer. Among these benefits are the following possibilities:

- Using traditional hydrocarbon oils or alternative fluids such as water for bearing lubrication
- Excellent efficiency due to low frictional losses and stable operation, with very little average shaft centerline movement over the operating speed of the machine
- Low maintenance and excellent reliability by eliminating bearing wear on startup and shutdown

Although this overview highlights the application of the externally pressurized water bearing in a radial load application, the technology works equally well on vertical machines. It can be applied successfully to thrust bearings, resulting in similar benefits and advantages. This application of the technology would be ideal in the many vertical-configuration Francis turbines used worldwide. Many potential applications of pressurized bearing technology can be found in the power, petrochemical, and industrial machinery markets. The simple principles described in this section can be applied universally to high-speed gas turbines using compressed gas bearings or low-speed hydro turbines utilizing pressurized water or more traditional oil-lubricated bearing systems. We see a real possibility that water-injected twin-screw compressors will find increasing use in industry.

REFERENCES

1. Agnes Muszynka, and Donald E. Bently, Fluid-generated instabilities of rotors, *Orbit*, Vol. 10, No. 1, Apr. 1989, pp. 6–14.
2. W.R. Evans, *Control-System Dynamics*, McGraw-Hill, New York, 1954.
3. J. Grant, Root locus analysis: an excellent tool for rotating machine design and analysis, *Orbit,* Vol. 20, No. 2, 2nd/3rd quarters 1999, pp. 21–22.
4. K. Ogata, *Modern Control Engineering*, 3rd ed., Prentice Hall, Upper Saddle River, N.J., 1997.
5. N. Nise, *Control Systems Engineering with MaTLAB*, 3rd ed., Wiley, New York, 2000.

SUGGESTED READING

1. Bassani, R., and B. Piccigallo, *Hydrostatic Lubrication*, Elsevier Science, New York, 1992.
2. Bently, Donald E., and Charles T. Hatch, Root locus and the analysis of rotor stability problems, *Orbit*, Vol.14, No. 4, Dec. 1993.

3. Bently, Donald E., and Charles T. Hatch, *Fundamentals of Rotating Machinery Diagnostics*, Bently Pressurized Bearing Press, Minden, Nov., 2002.
4. Bently, Donald E., Dean W. Mathis, and G. Richard Thomas, Externally pressurized bearing: a tool for rotordynamic machinery management, *Proceedings of the ISROMAC10 Conference*, Mar. 2004, Honolulu, HI.
5. Bently, Donald E., and Agnes Muszynska, Why have hydrostatic bearings been avoided as a stabilizing element for rotating machines? *Proceedings of the Symposium on Instability in Rotating Machinery*, Carson City, Nev., June 1985, NASA Conference Publication 2409, 1985.
6. Bently, Donald E., and Agnes Muszynska, Role of circumferential flow in the stability of fluid-handling machines, rotors, *Proceedings of the Texas A&M 5th Workshop on Rotordynamics Instability Problems in High Performance Turbomachinery*, May 16–18, 1988, College Station, Tex., pp. 415–430.
7. Cameron, Alastair; *Basic Lubrication Theory*, 3rd ed., Wiley, New York, 1981, p. 177.
8. Cannon Robert H., Jr., *Dynamics of Physical Systems*, McGraw-Hill, New York, 1967.
9. Evans, Walter R., *Control-System Dynamics*, McGraw-Hill, New York, 1954.
10. Fuller, Dudley D., *Theory and Practice of Lubrication for Engineers*, 2nd ed., Wiley, New York, 1984, p. 73.
11. Harrison, W. J., The hydrodynamical theory of lubrication of a cylindrical bearing under variable load and of a pivot bearing, *Transactions of the Cambridge Philosophical Society*, Vol. 22, Apr. 24, 1919, pp. 373–388.
12. Institution of Mechanical Engineers, Externally pressurized bearings, *Proceedings of the Institution of Mechanical Engineers*, a joint conference arranged by the Tribology Group of the Institution of Mechanical Engineers and the Institution of Production Engineers, Nov. 17–18, 1971, IME, London, 1972.
13. Rowe, W. B., *Hydrostatic and Hybrid Bearing Design*, Butterworth, Woburn, Mass., 1983.
14. Thomas, G. Richard, a brief review of fluid film bearing lubrication principles, presented at the Vibration Institute Seminar, Feb. 2004.

14

COUPLINGS, TORQUE TRANSMISSION, AND TORQUE SENSING

14.1 COUPLING OVERVIEW*

High-reliability and low-maintenance requirements are almost always among the key demands of process machinery users. This explains why coupling selection deserves considerable attention. Major requirements for high-performance couplings are high-torque and high-speed capacity, low weight and small envelope size, low overhung moment, and low residual unbalance. The coupling must be capable of transmitting the system design torque at maximum continuous speed for extended periods. It must be able to handle speed and load transients at defined misalignment conditions with minimum reactions on the drive system.

There are several major factors that in combination, determine the continuous duty rating of a coupling:

- High speeds may limit the coupling diameter. This in turn sets the tooth pitch diameter and tooth loading of gear couplings (Fig. 14.1) or bolt pitch diameter of nonlubricated couplings (Figs. 14.2 through 14.4).
- The torque that can be transmitted by gear couplings of a given pitch diameter and tooth length is a function of allowable contact pressure and the relative sliding velocity between hub and sleeve teeth.
- The torque that can be transmitted by metal disk or diaphragm-type high-performance couplings is a function of allowable stresses in the flexing members.

---

* Based on application summaries provided by Michael Calistrat & Associates, Missouri City, Tex.; product information courtesy of Lucas Aerospace Company, Utica, N.Y., and the various contributors listed as sources of illustrations.

A Practical Guide to Compressor Technology, Second Edition, By Heinz P. Bloch

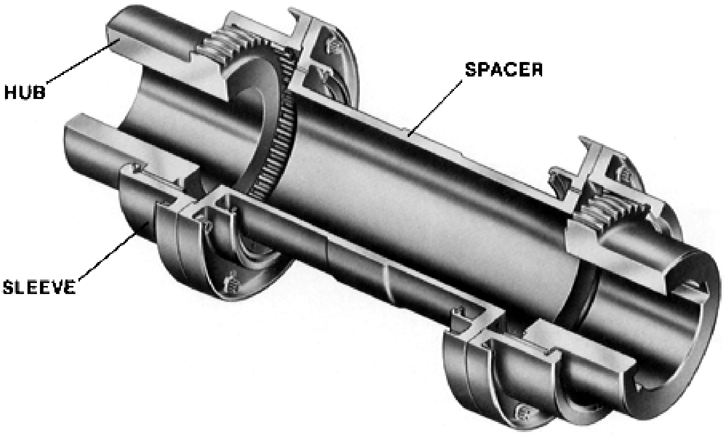

FIGURE 14.1 Gear coupling requires lubrication. *(Zurn Industries, Erie, Pa.)*

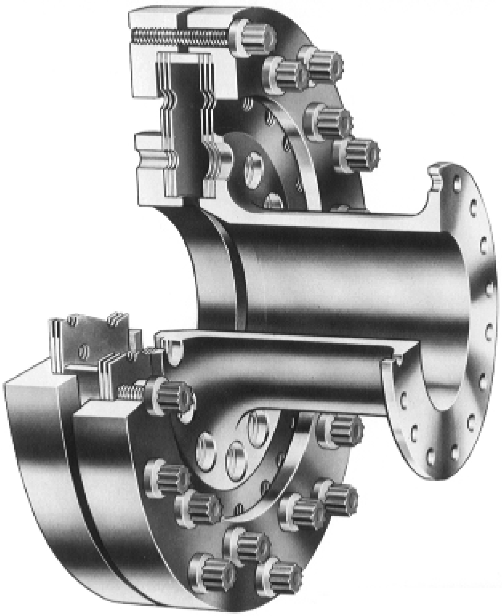

FIGURE 14.2 Nonlubricated Flexxor coupling. *(Coupling Corporation of America, Jacobus, Pa.)*

- Running misalignment determines the relative sliding velocity between the gear teeth for a given pitch diameter and speed of rotation. Similarly, running misalignment affects the stress levels in flexing members of nonlubricated couplings.
- Tooth hardness determines the allowable contact pressure. Heat-treated alloy steel is suitable for many applications, but increased surface endurance may be obtained by suitable hardening procedures, regardless of coupling type.

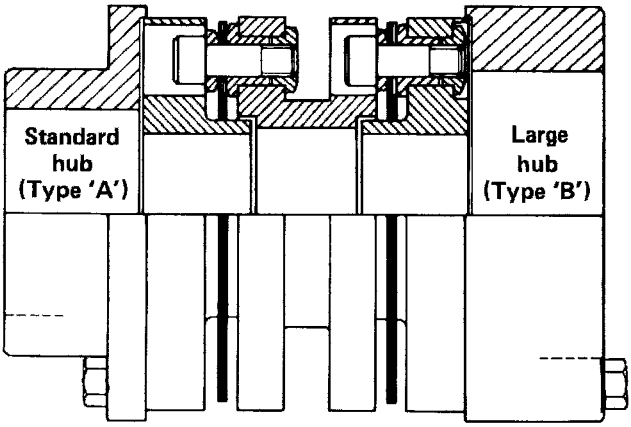

FIGURE 14.3 Disk pack coupling. *(Flexibox, Inc., Houston, Tex.)*

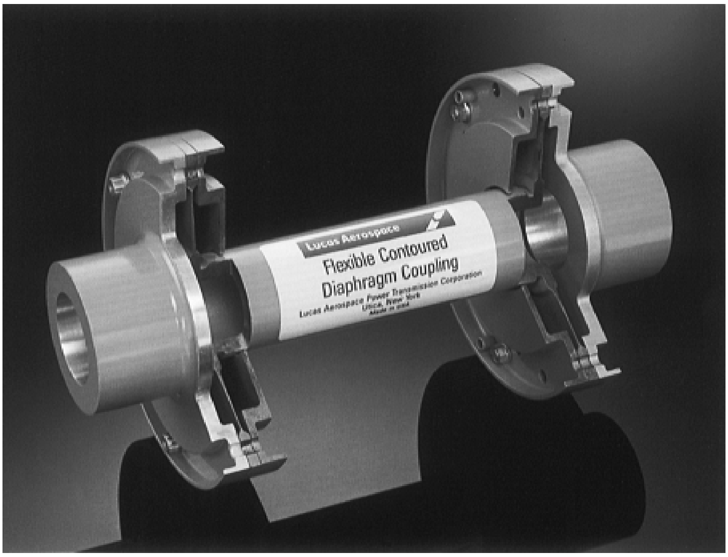

FIGURE 14.4 Flexible contoured diaphragm coupling. *(Lucas Aerospace Company, Utica, N.Y.)*

14.1.1 Low Overhung Moment

The effect of coupling overhung moment is felt not only in machine bearing loads but in shaft vibrations. The advantage of a reduction in overhung moment is not only to reduce bearing loads but to minimize shaft deflection, which results in a reduction in the amplitude of vibration. The reduction in coupling overhung moment produces an upward shift in shaft critical speeds. This change in natural frequencies results in an increase in the *spread* between natural frequencies. For many applications, reduced overhung moment is an absolute necessity to enable the system to operate satisfactorily at the operating speed required.

Low overhung moment is generally achieved with a conventional gear coupling configuration, which consists of gear meshes between a shaft-mounted hub and sleeve-spacer assemblies (Fig. 14.1).

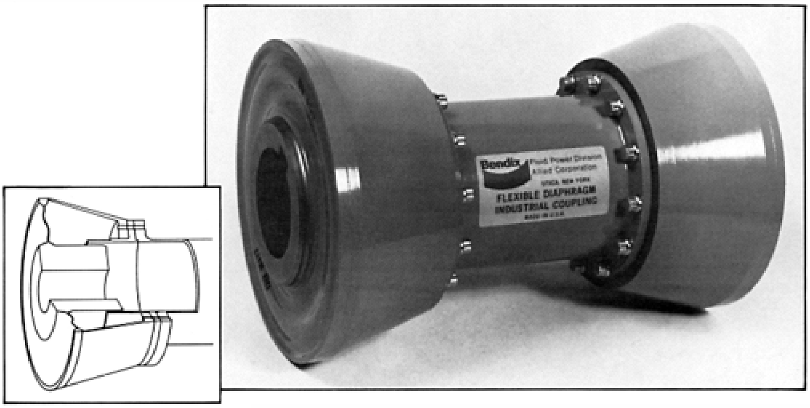

FIGURE 14.5 Low-moment-type diaphragm coupling. *(Lucas Aerospace Company, Utica, N.Y.)*

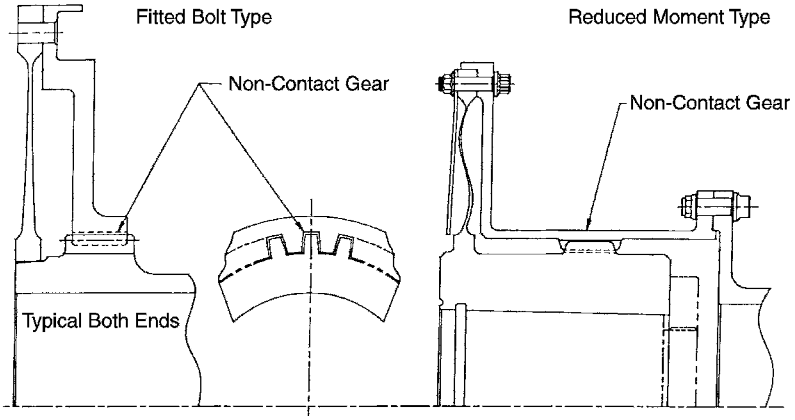

FIGURE 14.6 Contoured diaphragm safety backup coupling. *(Lucas Aerospace Company, Utica, N.Y.)*

Diaphragm couplings can achieve similar results with geometries, as illustrated in Fig. 14.5. In either case, the heavy coupling sections are placed as far back as possible so that the resultant gravity force due to the weight and center of gravity of the hub and the distributed weight of the sleeve–spacer–sleeve assembly applied at the centerline of the hub teeth is the least distance from the centerline of the machine bearings.

The diaphragm safety, or noncontacting gear type of coupling configuration (Fig. 14.6) usually consists of a spool or distance piece extension having internal gear teeth spaced between the teeth machined on the periphery of shaft-mounted coupling hubs.

The disadvantage of the concentration of the weight of the spool piece at points between the connected shaft ends can often be offset by using shorter extensions of the shaft from the machine bearing and by using a smaller and lighter-weight coupling because of the inherent large bore capacities of rigid hubs.

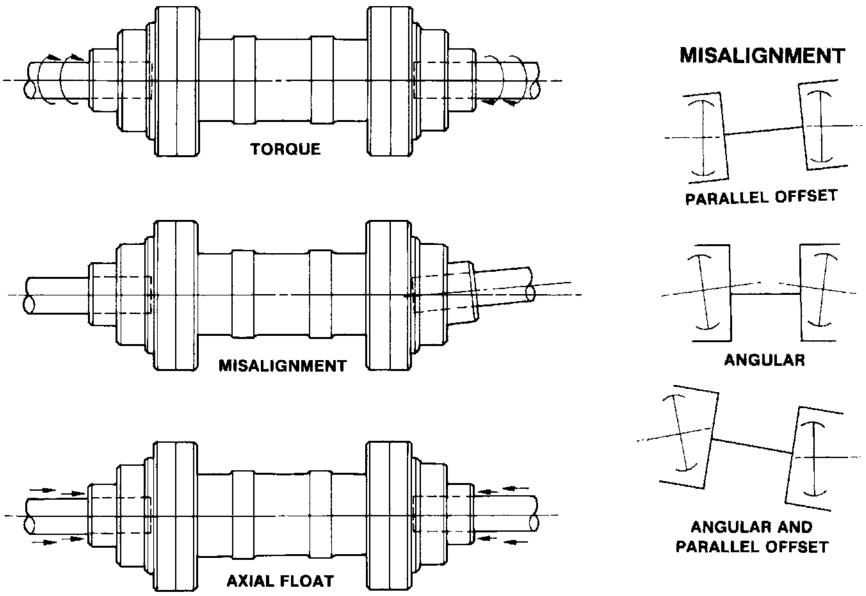

FIGURE 14.7 Functions of a coupling. *(Zurn Industries, Erie, Pa.)*

14.1.2 Low Residual Unbalance Desired

A gear-type high-performance coupling consists of a number of components fastened and hinged together by the tooth meshes. The minimum number of components for a double-engagement coupling is three. Angular and offset misalignment can thus be accommodated (Fig. 14.7). Three-piece couplings include the continuous sleeve, or flangeless coupling, and the marine, or spool, configuration. Five components—two hubs, two sleeves, and a spacer—are used in most other configurations.

In diaphragm couplings (Figs. 14.4 through 14.6) torque is transmitted from the driving shaft hub to the diaphragm rim through the body-fitted bolts and then through the contoured profile to the rigid diaphragm hub electron beam welded to the spacer tube. From here, the torque passes to the opposite diaphragm hub and through the contoured profile to the integral rim and again through the rim body-fitted bolts to the driven hub and output shaft.

Contributing factors to the total residual unbalance of a coupling are:

- *Balance correction tolerance*
- *Balance machine accuracy:* machine sensitivity and driver error
- *Arbor assembly unbalance:* mandrel and bushing unbalance
- *Mounting surface runout:* mandrel runout, bushing-to-mandrel clearance, bushing bore-to-mounting surface runout, and arbor bushing-to-hub bore (or sleeve rabbet) diametral clearance
- *Pilot surface runout:* hub bore-to-hub body pilot OD in cases where metal must be removed from the pilot OD after balancing to provide assembly clearance
- *Pilot surface diametral clearance:* hub-to-sleeve pilot clearance and sleeve-to-spacer diametral clearance
- *Hardware unbalance:* bolts, nuts, retaining rings, etc.

The implication of the aforementioned is that the straightness, concentricities, minimum clearances, and dynamic balance of the tooling are more important than the final correction tolerance in achieving an actual minimum of residual unbalance.

14.1.3 Long Life and Maintainability

The main mode of failure of a gear coupling is, in most cases, wear or fatigue of the tooth surfaces, due to a lack of lubrication, incorrect and water-contaminated lubricant, or excessive surface stress.

Assuming correct lubrication, long life of a gear coupling is attained by proper surface treatment of the teeth. General practice is to make the gear elements of high-performance couplings from chrome–molybdenum steel, or chrome–molybdenum–nickel steel that is heat treated to a core hardness of about 300 BHN.

Diaphragm and disk pack couplings are subjected to potential distress primarily when sensitive surfaces are nicked or scratched, or whenever the flexing metal parts are either pulled apart or pushed together because of hub installation errors, unexpected thermal growth, or movement of coupled shafts.

The principal advantage of nonlubricated metal disk and diaphragm-type high-performance couplings is derived from the fact that neither requires lubrication. Gear couplings, on the other hand, will suffer quickly whenever proper lubrication guidelines are violated. As already mentioned, gear-type couplings require lubrication because of the relative sliding motion between the teeth of the hub and sleeve. This sliding motion is alternating and is characterized by small amplitudes and relatively high frequencies. For example, a gear coupling on a 3-in. shaft turning at 10,000 rpm with an angular misalignment of 2 min has an alternating motion with a frequency of 167 cycles/s and a peak-to-peak amplitude of 1.7 thousandths of an inch.

Even with optimum lubrication, such a condition would probably cause fretting corrosion. Fortunately, the load on each tooth is not constant but varies twice per revolution from maximum to minimum. The ratio between the maximum and minimum force on the tooth is a function of misalignment and tooth geometry; above certain conditions the minimum becomes zero, and this means that temporarily there is actual separation between the teeth. On the other hand, as the misalignment decreases, the force on the tooth tends to remain constant, but the amplitude of the oscillation decreases also.

For use in oil-lubricated couplings, antirust and antifoaming additives and antioxidants are not beneficial. On the contrary, in the case of continuous oil flow lubrication, such additives are often retained within the coupling, causing serious problems. EP additives are not detrimental, but laboratory tests could not prove that they are advantageous in high-performance couplings. It should be noted that these couplings are designed to work under relatively low contact pressures (less than 4000 psi), and extreme pressures could be developed only during the break-in period. For this reason only, EP additives are recommended when lubricating gear couplings.

Very few high-performance couplings are grease lubricated. There are two main reasons for this: the fact that grease-lubricated couplings must be serviced more often than continuously lubricated couplings, and the fact that most of the greases available today are not resistant to centrifugal forces (and high-speed couplings certainly develop very high centrifugal forces). The 3-in. shaft coupling turning at 10,000 rpm would develop a centrifugal force equivalent to 8400 g. It is worth noting that industrial centrifuges cannot develop more than 10,000 g.

Under such high forces, greases tend to separate into their oil and soap constituents. Unfortunately, the soaps are heavier than oils, so that the teeth of the gear coupling at the larger diameter are contacting grease that has an excessive percentage of soap.

14.1.4 Continuous Lubrication Not a Cure-All

Turbomachinery installations that still apply gear couplings are likely to depend on continuous lubrication from the main oil system. The viscosity of this oil is no doubt chosen to satisfy compressor and driver bearing requirements; it is probably too light for optimized lubrication of gear couplings. Perhaps even more damaging is the fact that much of the wear product or water contamination carried by the lube oil ends up being centrifuged out in the coupling. Consider the following.

A coupling requiring an oil flow of 3 gal/min will have a total oil circulation of 1,576,800 gal/yr. If we assume a nearly perfect oil purity of only 2 parts of dirt per million and if the coupling centrifuge effect separates all of this dirt, then in one year the coupling would accumulate 3 gal, or approximately 12 L of sludge!

From the foregoing, we may conclude that

- Grease-packed couplings are acceptable for high-speed machinery only if frequent maintenance downtime can be tolerated.
- Continuously oil-lubricated couplings should be designed so that sludge is not allowed to accumulate in oil retention dams and similar discontinuities.
- The lube oil supply must be virtually free of solid contaminants and, especially, free of water. (Refer to Section 15.2 for a discussion of state-of-the-art water removal methods.)
- The user should give serious consideration to nonlubricated turbomachinery couplings.

14.1.5 Contoured Diaphragm Coupling

The design of a well-proven high-speed high-power nonlubricated coupling is centered principally about the contoured diaphragm (Figs. 14.4 through 14.6). It is this special hyperbolic contouring of the diaphragm that permits the accommodation of torque, speed, axial deflection, and simultaneous angular misalignment while maintaining uniform shear and low tensile stress. Two diaphragm profiles are employed. A straight profile is used on some models (Fig. 14.6, left side). A wavy profile that has the same hyperbolic contour and allows radial freedom of the inner hub and outer rim is used on other models (Fig. 14.6, right side).

As shown in Fig. 14.8, the diaphragm bending stress, resulting from angular and parallel misalignment, is a fully reversing cyclic fatigue stress. This stress occurs at the rate of one cycle per revolution. The diaphragm is designed to distribute this stress across the area of its profile. In addition, the transition from optimal fatigue stress in the profile to outer rim and inner hub should be controlled by generous radii.

Figure 14.9 represents a plot of fatigue data generated by actual life-cycle testing of diaphragms. Fatigue life of the diaphragm material AMS 6414 (vacuum melted 4340) is 70,000 psi at 10^7 cycles. Conservative design criteria restrict imposed bending stress to a maximum of only 35,000 psi.

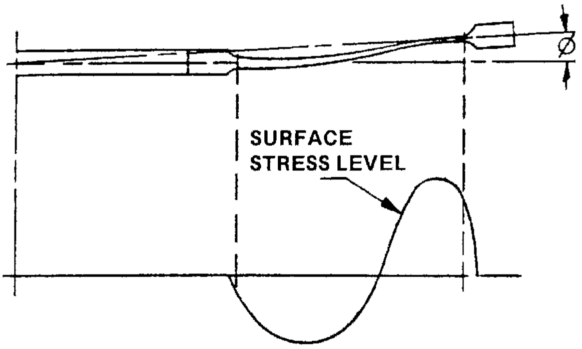

FIGURE 14.8 Diaphragm bending stress is a fully reversing cyclic fatigue stress. *(Lucas Aerospace Company, Utica, N.Y.)*

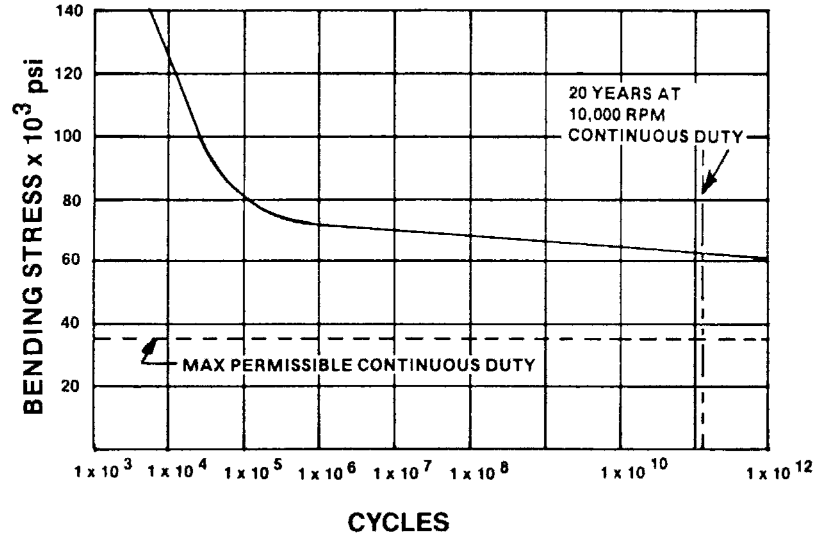

FIGURE 14.9 Fatigue life curve depicting life-cycle testing of contoured diaphragms. *(Lucas Aerospace Company, Utica, N.Y.)*

A modified Goodman diagram is shown in Fig. 14.10. The combined mean stress (steady-state axial or torsional) and combined alternating stress (cyclic axial or torsional and bending) for a given operating condition are plotted on the constant life (modified Goodman) fatigue diagram. Manufacturers such as Lucas Aerospace require that all continuous and short-term operations must have the plotted operating point fall within the area under the dashed curve. Any point within this area has a minimum cyclic factor of safety of 2.0.

For corrosion protection each flex unit is coated with multiple layers of Sermetel W, which is an inorganically (chemically) bonded aluminum coating offering a sacrificial method of corrosion protection. In this manner anytime an area of base material does become exposed to a hostile atmosphere, the Sermetel coating which is more chemically reactive than steel will be the only surface to corrode. This is referred to as *anodic corrosion protection*, which is highly successful.

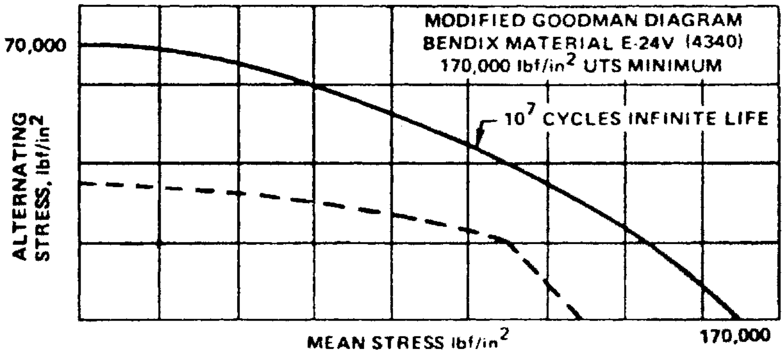

FIGURE 14.10 Modified Goodman diagram for high-performance contoured diaphragm couplings. *(Lucas Aerospace Company, Utica, N.Y.)*

Covering this layer are several coats of chemically resistant epoxy paints. Not only does the epoxy provide protection from direct contact with corrosives, but it also is very tough and helps guard the diaphragm from damage due to abrasion.

14.2 COUPLING RETROFITS AND UPGRADES*

Gear coupling replacements are desirable on many older machines. A common approach is to replicate the geometry of the gear coupling so that (1) an advantageous dry coupling fits the original space without major guard modifications, and (2) the mass–elastic characteristics comprising weight, center of gravity, overhung moment, WR^2, and torsional stiffness are replicated to avoid changes in torsional or lateral critical speeds. This approach assumes that adequate margins exist—with the original coupling in place—between running speed and lateral, torsional, or axial resonant frequencies. Rotor dynamics analysis should always be considered as a means to ensure an informed choice of coupling when retrofitting couplings on high-speed machinery.

Since connected machines function as spring systems in series, the potential exists for torsional resonance. Couplings, being the more accessible components within the system, are often modified to "tune" the overall system such that potentially dangerous torsional vibrations are attenuated. Both the flex-element configuration and, more commonly, the coupling spacer section can be redesigned to produce significant changes in total torsional stiffness. The spacer sections illustrated in Fig. 14.11 are common hybrids. Figure 14.11*a* represents a typical spacer section designed either to increase torsional stiffness or, alternatively, to increase lateral stiffness and increase whirling speed on long spans (typically, cooling tower fan drives). Figure 14.11*b* shows a quill-shaft spacer section designed to minimize torsional stiffness.

The disk coupling carries torque load as a tensile stress in the tangential link. Diaphragm couplings carry torque as a shear stress between outer and inner diameters. Steel is typically twice as strong in tension as in shear which means that for a given torque capability, the disk coupling is typically the lowest overall major diameter. In terms of flexibility, the

---

* Contributed by Michael Saunders and David Matt, of FlexElement Texas, Inc., Houston, Tex.

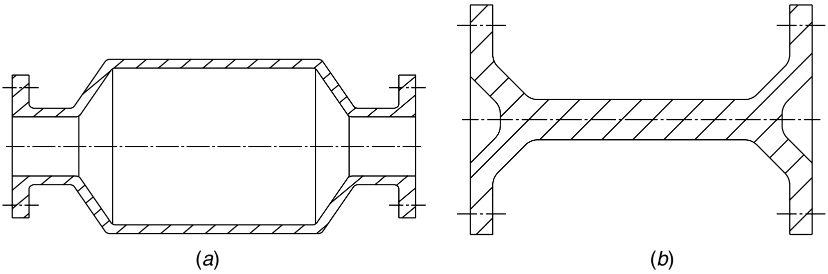

(*a*) (*b*)

FIGURE 14.11 Coupling spacer sections designed for different radial and torsional response characteristics. (*FlexElement Texas, Inc., Houston, Tex.*)

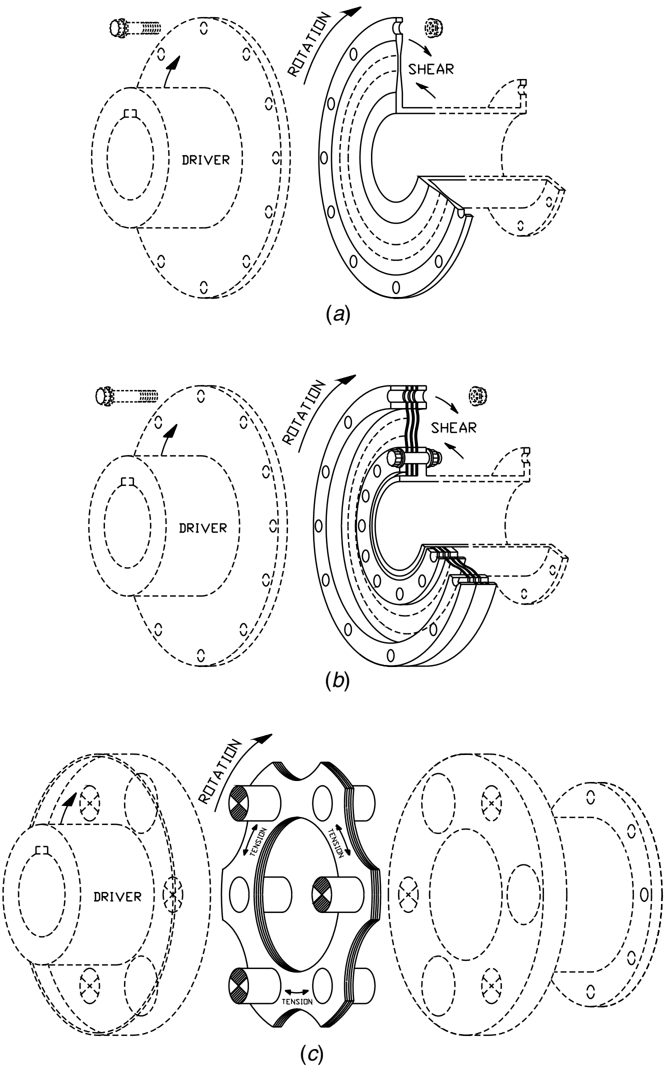

FIGURE 14.12 (*a*) Single diaphragms; (*b*) multiple diaphragms; (*c*) coupling FlexElements designed for specific retrofit applications.

disk coupling is stiff in the directions in which it needs to be stiff (torsionally and radially) and soft in the directions in which it needs to be soft (angularly and axially).This combination of favorable mass–elastic characteristics suggests that its overall rate of acceptance and range of application will continue to increase.

A comparison of coupling flexible elements designed for special retrofit applications is illustrated in Fig. 14.12. Clearly, the configuration or geometry and sometimes even the material selection of coupling components will have to accommodate certain rotordynamic parameters. Retrofit applications deserve close attention and cannot be left to chance.

14.3 PERFORMANCE OPTIMIZATION THROUGH TORQUE MONITORING*

Fouling deposits on blading or nozzles cause performance deterioration of steam and gas turbines. In steam turbines, evidence of these deposits is frequently not discovered until the steam flow increases to a point where no additional steam can be passed through the unit. The turbine can no longer carry an assigned load under these conditions. In gas turbine air compressors, fouling deposits reduce the amount of air available for efficient combustion. Excessive fuel consumption or reduced load-carrying capacity may result. Similarly, process gas compressors often polymerize. The resulting flow impediment can seriously influence process operation and mechanical performance. Online torque measurement systems provide an easy method of measuring produced power. Comparing fuel consumption, load conditions, and torque enables you to decide whether further steps need to be taken.

Turbomachinery performance can be restored by judicious application of onstream cleaning methods. Abrasion cleaning and solvent cleaning (water washing) are the two principal approaches. Literature, which can be obtained from original-equipment manufacturers, provides ample details of suitable procedures and their relative merit. The problem, to date, has been to figure out conveniently and accurately when to initiate an onstream cleaning process.

In purely economic terms, onstream cleaning should begin when the cumulative cost of power lost because of fouling since the last cleaning cycle equals the cost of the cleaning procedure. This is where the online torque measuring system comes into play. Installed to monitor torque at the coupling, the device also shows related speed and power. Peak torque, speed, and power values are also provided. The indicator can be connected to a computerized monitoring system, strip chart recorders, or tied to a process control computer or programmable logic controller. This additional equipment allows accessing of and correlation with steam or fuel flowmeters and heat rate tables.

Axial compressor fouling continues to be a common and persistent cause of reduced gas turbine efficiency. A 1% reduction in axial compressor efficiency accounts for approximately a 1½% increase in heat rate for a given power output. Even compressor stations not subjected to industrial pollutants or salty atmospheres are frequently prone to fouling. Torque measurements provide an early indicator of changes in efficiency.

Performance deterioration of gas turbines can be detected by combining turbine fuel flow rate with power output. Monitoring systems should incorporate readouts of power. In a

---

* Developed and contributed by Bently-Nevada, Minden, Nev. Additional information provided by Torquetronics, Inc., Allegany, N.Y., and by Indikon/Metravib Instruments, Inc., Cambridge, Mass.

computer system, this value can easily be compared to produced power per specific rate of fuel consumed.

Turbine manufacturers provide test stand–verified performance curves. These data are helpful in determining the degree of performance deterioration by comparing actual (fouled) condition and ideal (clean) condition specific fuel consumption rates. For efficiency optimization an operation should monitor the average fuel wastage, or average turbine efficiency, at regular time intervals.

Continuous torque sensing devices can provide valuable information in other areas as well. With torque limitations on one or both of the coupled shafts, a torque indicator can serve as a constraint control. Torque sensing can allow process optimization for computer-controlled compressors where several levels of refrigeration are available. Some turbocompressors can be configured to get desired flow and head by such methods as varying speed, varying stator blade angle, and varying guide vane angle. On large axial compressors, a combination of stator blade adjustment and speed variation of about 10 to 15% improves the part load efficiency of the compressor and increases the stable operating range. When given sufficient attention, appreciable differences in energy consumption may result, and savings of power may be realized by using torque data.

Increased energy input to the driver due to performance decay of the driver or driven equipment can be detected effectively by torque measurements. The case of a gas turbine driving a centrifugal compressor best illustrates how the issue can be resolved by measuring torque. High driver fuel consumption and high-coupling power shows that the driven machine is more highly loaded, mechanically deficient, or internally fouled. Using the dynamic torque signals and diagnostic and analytical instrumentation, procedures are available to figure out which of these three possible causes is most probable. For example, high driver fuel consumption and normal coupling power would show that the most probable cause of the efficiency decay is turbine fouling. Torque measurements and subsequent action can thus reduce energy waste in compressors incorporating antisurge controls. Equally important: Torque sensing may pinpoint causes of failure.

Although many methods exist for determining how a component failed, torque measurements may show what caused it to fail and provides clues as to how to avoid repeat failures. Looking at broken pieces can tell you how something failed. Comprehensive maintenance records can help you predict when something will fail again. Yet these methods do little to identify the cause of failure or prevent failure recurrences.

It can be difficult to figure out the cause of failure with insufficient accurate information on system loading during machine operation. Is it a running overload problem? Is it a resonance-related frequency or vibration-related problem? These and other questions can be answered by measuring torque on a running system. The data should reveal both the steady state and dynamic torque.

Bently-Nevada's TorXimitor torque-sensing system is depicted in Figs. 14.13 and 14.14. It consists of two parts: a stationary component that surrounds, but does not make contact with, a rotating system. The rotating system contains strain gauges and electronic circuitry installed on the coupling spacer or spool piece. Transformer-coupled strain gauge sensing is also employed in MCRT torque meters (www.himmelstein.com). The stationary component is installed on a mounting plate that is attached to a pedestal on the machine baseplate or equipment platform.

A similar approach is embodied in Torquetronics meters. The Torquetronics system measures torque as the shaft twists between a pair of toothed flanges made integral with a coupling spacer. A pair of phase-displaced sinusoidal signals are generated by multiple

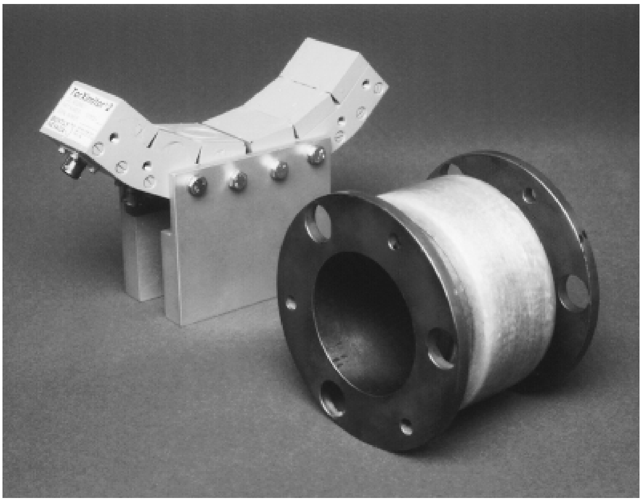

FIGURE 14.13 TorXimitor torque-sensing device. *(Bently-Nevada Corporation, Minden, Nev.)*

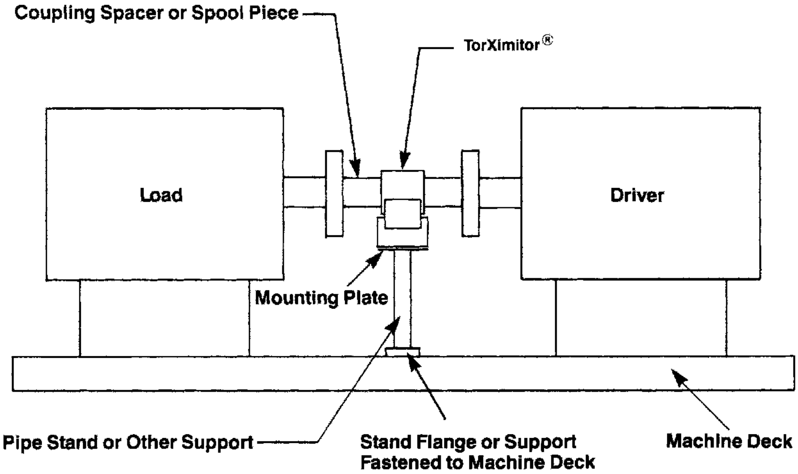

FIGURE 14.14 Schematic representation of TorXimitor torque-sensing device. (*Bently-Nevada Corporation, Minden, Nev.*)

pickups in the form of internally toothed rings surrounding fully encapsulated circumferential coils that are energized to provide a low-level toroidal flux path. Clearly, the torque required to twist the shaft through one tooth pitch must correspond to exactly 100% phase displacement.

The toothed pickup rings are permanently fixed to each end of a rigid stator tube that is supported clear of the rotating shaft from the coupled machines and often replaces the existing coupling guard. Refer to Figs. 14.15 and 14.16. The readout unit, which is a specialized digital phase meter, measures speed and the phase displacement of the two signals and converts them to torque, speed, and power in engineering units. The integrity of the

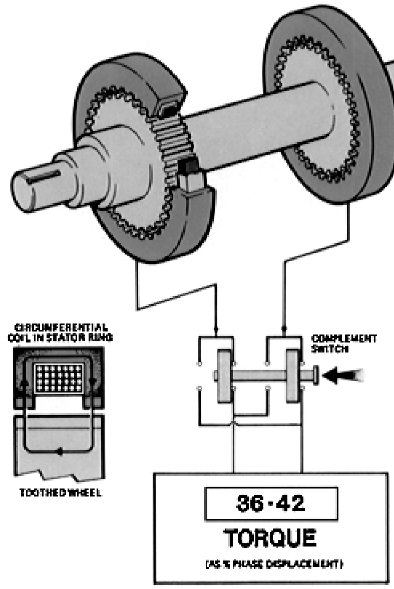

FIGURE 14.15 Torquetronics torque metering principle. *(Torquetronics, Inc., Allegany, N.Y.)*

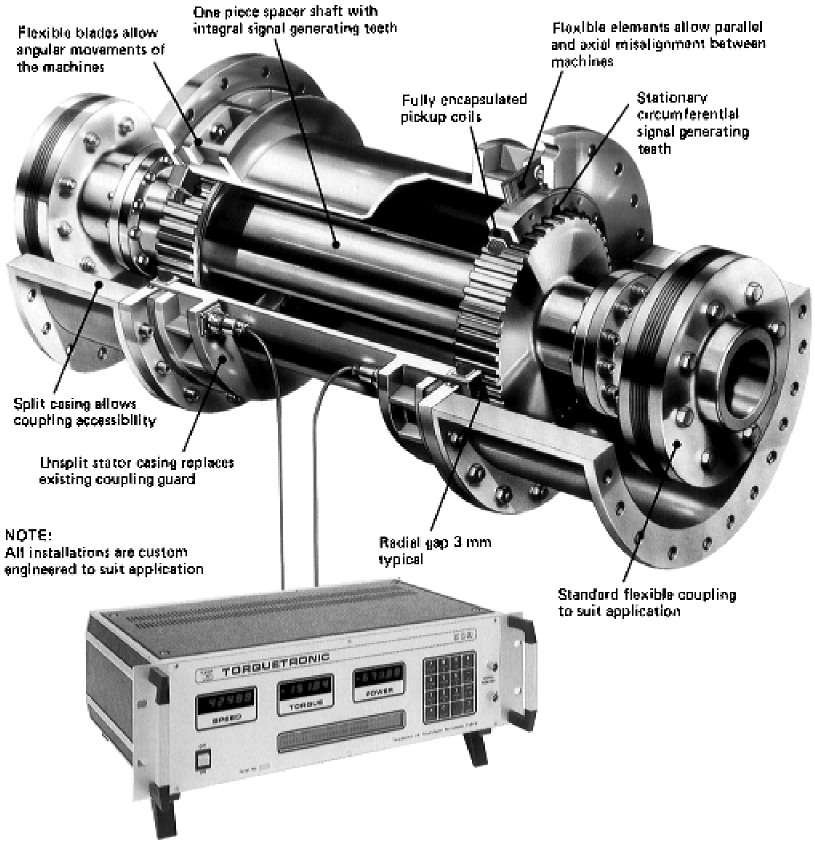

FIGURE 14.16 Cutaway view of Torquetronics torque-sensing components. *(Torquetronics, Inc., Allegany, N.Y.)*

readout unit can be proved by a complementary switch that temporarily crosses the inputs to the phase meter. If reading + complement add up to 100% exactly, all must be correct since it is most unlikely that equal and opposite errors will exist in two measurements that are seen quite independently by the readout.

Our last example describes the Indikon torque meter system. This instrumentation package can also incorporate online continuous ("hot") alignment monitoring. Figures 14.17 and 14.18 illustrate both principles.

Indikon uses a rotary transformer (Fig. 14.19) whose functioning depends on electromagnetic induction between a primary and a secondary winding, just like an ordinary transformer. In this case, however, the secondary is attached to the rotating shaft and the primary is fixed relative to the machine frame. The air gap between primary and secondary is sufficiently large to accommodate worst-case misalignment. Submersion in oil or exposure to oil mist does not affect transformer operation.

An on-shaft calibration circuit periodically generates a millivolt per volt calibration signal that goes through the same shaft electronic circuits as the torque signal. By measuring the ratio of these two signals, the effects of changes in strain gauge bridge voltage, shaft electronic circuit characteristics, and transformer coupling are eliminated, since they affect both signals equally. Zero errors due to shaft displacement are avoided by using different power and signal frequencies.

As in all strain gauge transducers, accuracy is a function of full-scale stress level. This determines whether the magnitude of the full-scale bridge unbalance signal is large enough to reduce to insignificance any residual effect of temperature on bridge balance. In general, a stress level of 15,000 psi permits a system accuracy within the range 0.20 to 1.0% of full scale. Shaft temperatures up to a maximum of 250°F are permitted.

Acceleration levels up to 20,000 *g* are permissible in those cases where the electronics package can be located along the axis of the coupling or torque shaft. In cases where the electronic package must be located on the shaft surface, a maximum of 15,000 *g* is allowable.

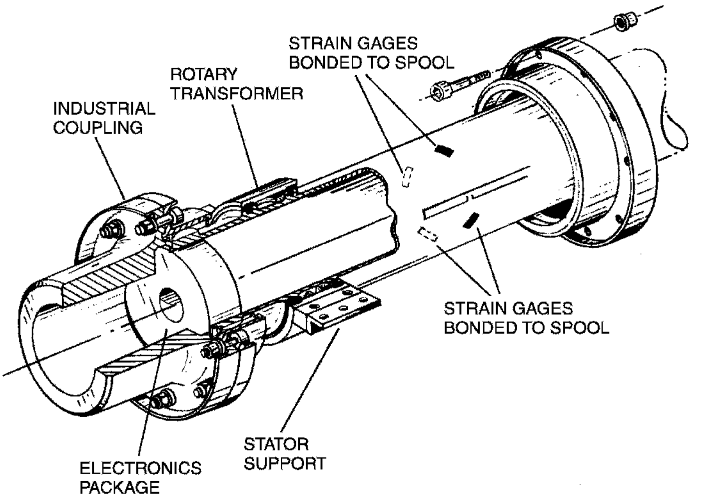

FIGURE 14.17 Indikon torque meter components. *(Indikon/Metravib Instruments, Inc., Cambridge, Mass.)*

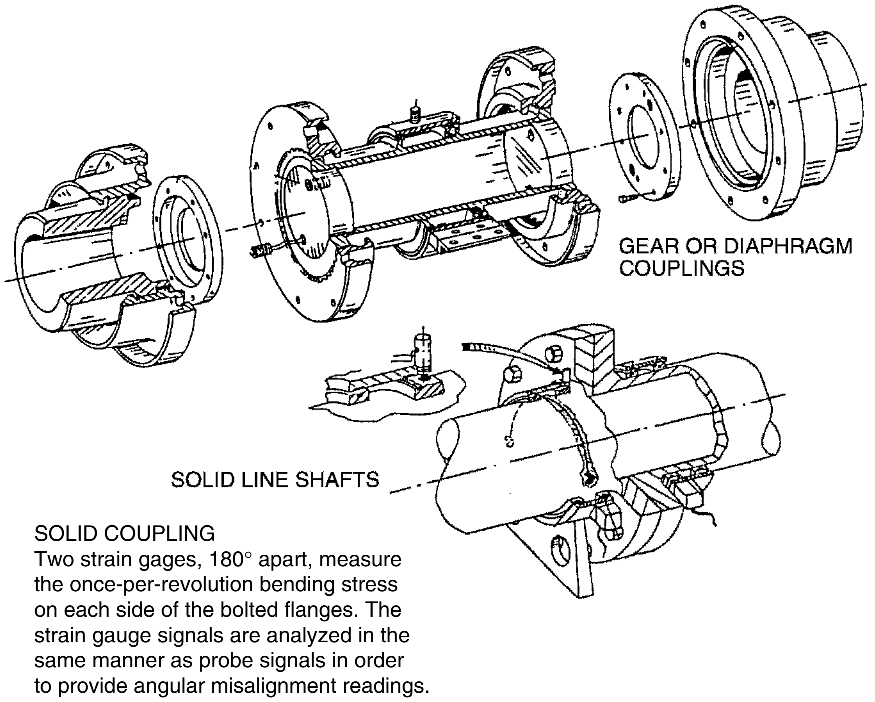

SOLID COUPLING
Two strain gages, 180° apart, measure the once-per-revolution bending stress on each side of the bolted flanges. The strain gauge signals are analyzed in the same manner as probe signals in order to provide angular misalignment readings.

FIGURE 14.18 Online continuous hot alignment monitoring elements associated with turbomachinery couplings. *(Indikon/Metravib Instruments, Inc., Cambridge, Mass.)*

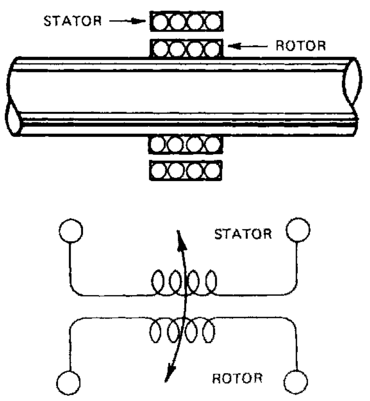

Electrical Equivalent of Rotary Transformer

FIGURE 14.19 Rotary transformer. *(Indikon/Metravib Instruments, Inc., Cambridge, Mass.)*

Torque pulsations or fluctuations over the frequency range 10 to 500 Hz produce an analog output signal for recording purposes or for viewing on an oscilloscope.

Wherever possible, the MCRT torque meter makes use of existing couplings or shafts. If stress levels have to be increased to attain the desired accuracy, this can be accomplished by machining a short reduced section on the coupling or shaft. The resulting change in overall torsional stiffness is usually less than 10%.

In new applications, couplings with suitable stress levels can be provided by coupling manufacturers. The preferred location for the shaft electronics package is along the shaft axis. Where this is not possible, the circuits are contained in a package distributed around the shaft circumference.

Indikon's hot alignment indicating system measures coupling misalignment under actual operating conditions and displays digitally the *X* and *Y* mils/in. and mils readjustments required for realignment. It is applicable to both gear- and diaphragm-type couplings. Solid couplings require a somewhat different approach, using strain gauges.

The basic components of the system are shown in Fig. 14.18. They include inductive proximity probes, rotating with the coupling, which measure the amplitudes of the once-per-revolution variations in gap due to misalignment at each end. A marker probe at 12 o'clock detects when the shaft is in a reference position, as determined by a slot or a thin metallic target.

By comparing the phase of the misalignment signal with the phase of a reference voltage derived from the marker probe, the *X* and *Y* components of the misalignment signal are obtained and displayed digitally on the indicator. Digital displays for either *X* parallel and *X* angular misalignment, or *Y* parallel and *Y* angular misalignment, are provided, as determined by a selector switch.

Continuous analog outputs for all four quantities are provided to permit the recording of the growth of the machine into its hot aligned condition. This system can also be used in place of rim and face dial indicators to adjust cold alignment offsets to correct for the misalignment measured under hot conditions.

For gear-coupling applications, an auxiliary system is available to measure mean sliding velocity and to actuate an alarm when conditions develop that could lead to gear surface failure.

The indicator resolves the misalignment signal into its parallel and angular components by making use of two fundamental considerations:

- If the once-per-revolution signals from the probes at both ends are equal, but opposite in phase, the misalignment is parallel. The signal from the probe at one end is then resolved into its *X* and *Y* components.
- If the misalignment is angular, the vector sum of the probe signals is not zero, and the difference signal is analyzed to obtain its *X* and *Y* components.

15

LUBRICATION, SEALING, AND CONTROL OIL SYSTEMS FOR TURBOMACHINERY*

15.1 CONSIDERATIONS COMMON TO ALL SYSTEMS

The primary function of an oil system is to provide the proper quantities of cooled and filtered oil at the required regulated pressure levels to the driven and driving equipment. This oil can be used for lubrication, shaft sealing, and/or control oil purposes. The oil system is designed to furnish the oil required at all operating conditions of the equipment. A basic combined lube and seal oil system is described and shown in Fig. 15.1.

A fabricated steel reservoir tank serves to store a volume of oil sufficient for typically 5 to 8 minutes at normal flow. The tank is fitted with both a dipstick and a sight glass level gauge. Removable heating elements, either steam or electric, are usually provided. These heaters are sized to heat the oil from the minimum site ambient temperature to the minimum required oil temperature required by the turbomachine (usually 70°F) within 12 hours. The tank is furnished with a temperature indicator and with a level switch that activates an alarm when the oil level is below the minimum operating level. The purge and vent connections on the tank provide a means to exhaust any gases that are released from the oil.

Oil is drawn from the bottom of the reservoir through suction strainers by motor- or steam turbine–driven pumps. The main and auxiliary pumps are identical and supply a constant flow of oil. Each pump discharge line has a relief valve that protects the equipment from any overpressure caused by a system malfunction. The relief valves are sized to pass full pump capacity. A pressure gauge and a check valve are furnished in each pump discharge line. A block valve is placed downstream of the check valve for maintenance purposes.

---

* Developed and contributed by Roy J. Salisbury, Manager, Customer Service Department, Imo Industries, Inc., DeLaval Turbine Division, Trenton, N.J. Portions derived from *Transamerica DeLaval Engineering Handbook*, copyright © 1947, by DeLaval Turbine Company.

A Practical Guide to Compressor Technology, Second Edition, By Heinz P. Bloch

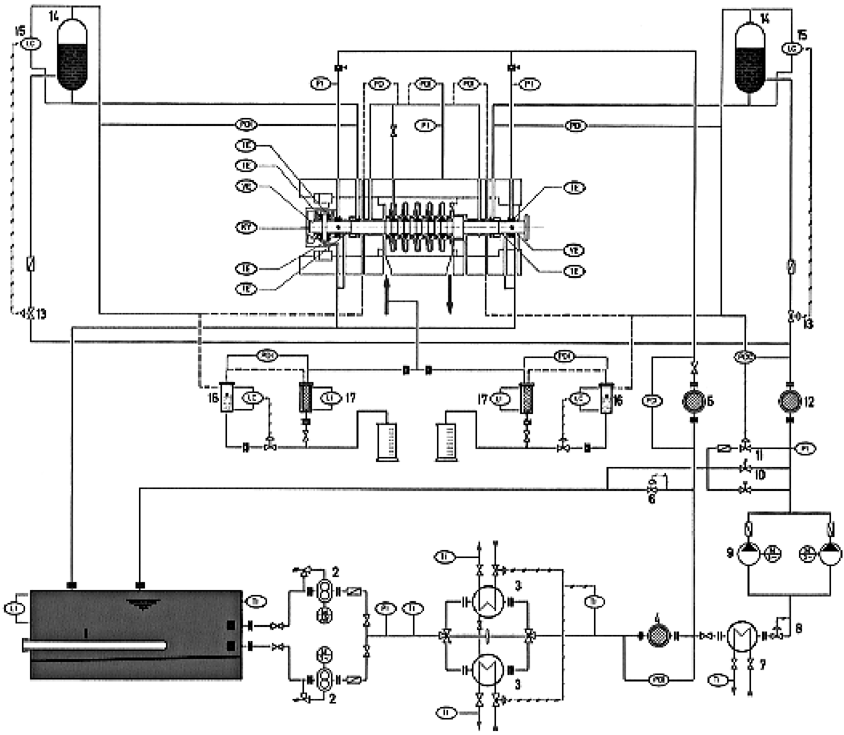

1. Oil reservoir
2. LP oil pumps
3. Oil cooler
4. Prefilter
5. Fine filter
6. Pressure-regulating valve
7. Seal oil cooler
8. Pressure-reducing valve
9. HP seal oil pumps
10. Overflow valve
11. Bypass control valve
12. Fine filter
13. Throttle valve
14. Overhead tank
15. Level controller
16. Primary separator
17. Secondary separator

FIGURE 15.1 Basic lube and seal oil schematic: forward pressure control. *(Mannesmann-Demag, Duisburg, Germany)*

The flow of oil then passes through a transfer valve that can transfer the flow from one filter–cooler set to the other set without interrupting the flow. Out-of-service units can be opened for cleaning or maintenance while the other units are in service. Two identical coolers, each capable of handling the system's maximum flow and heat load, are furnished. Water flow to the coolers is regulated to maintain the desired oil outlet temperature of typically 120°F (49°C). Two identical filters are usually supplied; additional prefilters are sometimes used. One filter is placed downstream of each cooler to remove particulate material as small as 10 or 5 μm. Filters, with clean cartridges, are sized to handle the maximum system flow and pressure with a pressure drop no greater than approximately 5 psi. A differential-pressure indicator and a differential-pressure switch are placed across the filter–cooler combination to warn of the need to change the filter cartridges.

To avoid oil pressure surging and interruption of the oil supply, the out-of-service filter–cooler combination is filled with oil before it is put on the line. The vent valves on the filters and coolers are used to vent air from the units, while the oil cross-connect line is opened to fill them. This cross-connect line is left open to keep the out-of-service units pressurized. Thermometers are fitted upstream and downstream of the coolers to check unit performance.

A back-pressure regulator valve is supplied to establish and control the header pressure after the filter-cooler units. This valve can be either self- or pneumatically operated, whichever method is dictated by duty. Oil is taken from a point before the filter–cooler units and bypassed back to the reservoir. The valve is sized to control a wide range of flows, with either one pump or both pumps in operation. In the latter case, the valve would pass a maximum flow of the two pump capacities less the flow required by the system.

Several different pressure levels are often required to carry out the various functions of an oil system. A pressure-reducing valve is used to reduce the header pressure (established by the back-pressure regulator) to the required pressure level for lubricating oil, control oil, and so on. One valve is used for each required pressure level.

When oil seals are used on a compressor, the flow to the seals is set by a flow control valve. This valve is designed to maintain a constant volume of oil regardless of how the oil pressure may vary.

All control valves—flow, pressure, or differential-pressure—have bypass provisions. In case of malfunction, the control valve can be isolated and the flow or pressure adjusted manually through the bypass globe valve.

The unit lubricating oil line receives oil from the console and delivers it at approximately 20 psig to the various points to be lubricated. Except for modern machinery incorporating such componentry as magnetic bearings or nonlubricated couplings, or both, the oil supply is fed to the compressor thrust and journal bearings, to the coupling, and to the driving equipment bearings. The line is fitted with a pressure indicator and several pressure switches at the farthest extreme of the header to ensure an adequate oil supply at this outermost point. One switch is set to trigger an alarm, and a second switch starts the auxiliary oil pump when the lubricating oil pressure falls to, say, 12 psig. The third switch is set to trip the unit at typically 8 psig decreasing.

The lubricating oil drain system collects the oil used by the compressor, coupling, and driving equipment and returns it to the reservoir. Each atmospheric drain line from the bearings and seals is fitted with a sight flow indicator and a thermometer.

15.2 SEAL OIL CONSIDERATIONS

Seal oil would be needed for the various contacting face, mechanical or oil film seals on turbocompressors, but not, of course, for labyrinth or dry gas seals. Seal oil, if required, is supplied to each compressor through a separate header. The seal oil pressure is often controlled from the downstream side of the seal but on some applications is controlled upstream (forward pressure control). A differential back-pressure regulator valve is often used for mechanical seals; a head tank is typically used for oil film seals.

When mechanical seals are used, the oil-side pressure is set about 45 psi above the gas side. A differential back-pressure regulator senses compressor reference pressure or control gas and regulates the seal oil to maintain the proper differential pressure. The seal oil system is fitted with a differential-pressure indicator and several switches. These are connected between the seal oil return line and the control gas connection for back-pressure designs, or the seal oil supply line and the control gas for forward-pressure control. The switches activate an alarm and start the auxiliary pump when the seal–oil–gas differential falls to approximately 35 psi Δp.

Oil film seals usually have a head tank that is mounted above the compressor to maintain a 5-psi differential above the compressor reference pressure. Dual-head tanks are occasionally used, with a level control valve supplied downstream of the seal oil return lines to maintain the proper level in the head tank. For forward-pressure control the level control valve is on the seal oil supply line, as shown in Fig. 15.1. It is usually located approximately 14 ft (4 m) above the centerline of the compressor.

The overhead seal oil head tank arrangement is sized to have the proper capacity and rundown time for emergency operation, coastdown, and block-in. A pneumatic level transmitter sends a signal to a level-indicating controller that operates the level control valve. Level switches and gauges are furnished for monitoring, alarming, and trip functions.

Oil drainers or separators are supplied for both mechanical contact, oil film, and similar seals. They collect the contaminated seal oil and provide an automatic means of discharging this oil for reuse or disposal. An oil drainer is essentially a tank with a float-operated drain valve arranged so that the seal oil leakage can be drained without releasing any gas. Each drainer can be isolated for servicing by closing three valves. The nonoperational drainer is bypassed, and both seals are allowed to drain into the remaining drainer by opening the valves in the crossover lines. A level glass is fitted on the drainer to indicate the operating level.

The majority of the components in the oil system are usually mounted on a preassembled console such as that shown in Fig. 15.2. Consoles of this type are piped and tested prior to shipment; they can generally accommodate a wide selection of valves, flanges, fittings, and other components to meet various specifications. Piping can be entirely carbon steel, entirely stainless steel, or any combination of the two, depending mostly on user preference.

For compressors with gas turbine drivers, compressor oil is usually supplied by the turbine oil system. In such cases, a small seal console that contains seal booster pumps, filters, and the necessary seal oil controls and instrumentation is provided. On some units, the

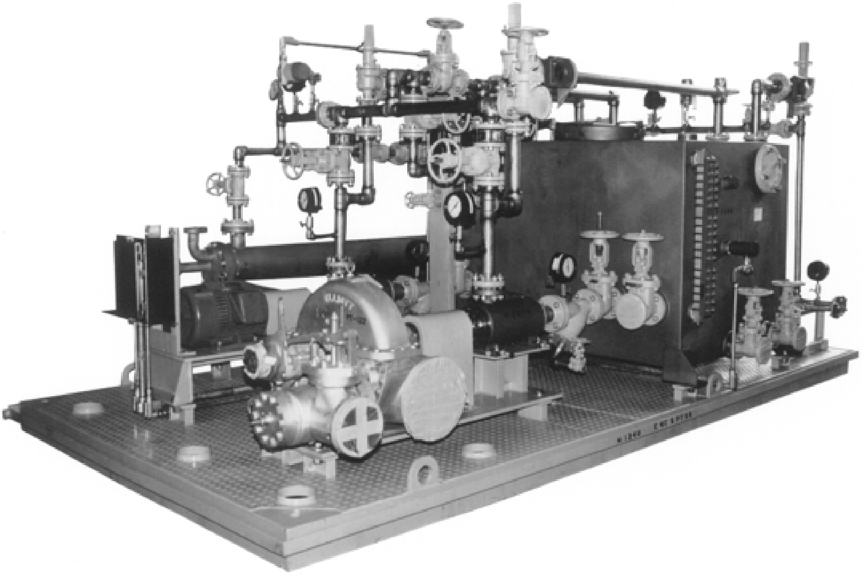

FIGURE 15.2 Lube oil console package for a modern compressor. *(Lubrication Systems Company, Houston, Tex.)*

main seal oil pump is driven from the compressor shaft with an auxiliary pump on the seal console. An emergency seal oil accumulator can be mounted directly on the seal oil console, with an external nitrogen supply providing the motive fluid to supply seal oil during plant power failures. These accumulators require special valving to avoid nitrogen ingestion into the system.

In most units the seal oil is combined with the lubricating oil in one system, but separate lubricating oil and seal oil systems can be provided if necessary because of potential contamination of the lubricating oil. Vacuum dehydrators, coalescers, centrifuges, air stripper, and nitrogen spargers are among the devices used to improve equipment reliability and reduce the cost of preventive maintenance. These units are typically designed for permanent installation on critical machinery oil systems for continuous, onstream purification.

A modern cost-effective lube oil reclaimer or onstream oil purifier schematic is shown in Fig. 15.3. Originally conceived by an Australian inventor, the principle is now employed in the Thermojet lube oil purifiers designed and manufactured by the Lubrication Systems Company of Houston, Texas.

In a typical configuration, the gear pump forces contaminated oil through a filter to remove particles and corrosion products. The pressurized oil is heated by steam or electric heaters and then enters the jet compressor or mixer where ambient air is induced. The air is humidified by the water in the oil and exits through a vent in the knockout vessel as the dehydrated oil returns to the reservoir. Process conditions are generally at temperatures of 140 to 190°F and atmospheric pressures. The higher the process temperature is, the greater the efficiency will be.

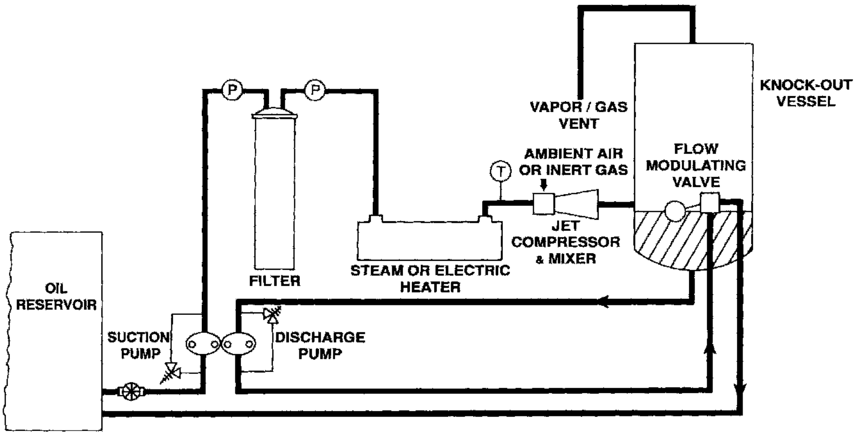

FIGURE 15.3 Onstream lube oil purifier using the air stripping principle. *(Ausdel, PTY, Ltd., Cheltenham, Victoria, Australia)*

16

COMPRESSOR CONTROL*

16.1 INTRODUCTION

Every centrifugal or axial compressor has (at a given rotational speed and inlet conditions) a characteristic combination of maximum head and minimum flow beyond which it will surge. Preventing this damaging phenomenon is one of the most important tasks of a compressor control system.

The most common way to prevent surge is to recycle or blow off a portion of the flow to keep the compressor away from its surge limit. Unfortunately, such recycling extracts an economic penalty due to the cost of compressing this extra flow. So the control system must be able to determine accurately how close the compressor is to surging so it can maintain an adequate—but not excessive—recycle flow rate.

This task is complicated by the fact that the surge limit, in general, is not fixed with respect to a single variable such as pressure ratio or the pressure drop across a flowmeter. Instead, it is a complex function that also depends on gas composition, suction temperature and pressure, rotational speed, and guide vane angle. An understanding of the principles of integrated control and protection systems is thus extremely important to companies and industries operating turbocompressors.

16.2 CONTROL SYSTEM OBJECTIVES

An integrated compressor control system may have any or all of the following objectives:

- *Performance control:* maintaining a primary process variable (e.g., discharge pressure or mass flow rate) at a desired set point level

---

* Developed and contributed by Compressor Controls Corporation, Des Moines, Iowa.

A Practical Guide to Compressor Technology, Second Edition, By Heinz P. Bloch

- *Surge protection:* preventing surge-induced compressor damage and process upsets without sacrificing energy efficiency or system capacity
- *Limiting control:* maintaining any process-limiting variables (such as drive motor current and fluid temperature) within safe or acceptable ranges
- *Loop decoupling:* minimizing adverse interactions between control functions
- *Load balancing:* distributing the overall compression load among several compressors in a multiple-compressor network
- *Event sequencing:* automating changes in process status by controlling such events as startup, shutdown, and purging operations
- *Online redundancy:* providing uninterrupted control in the event of a hardware failure
- *Host communication:* integrating the compressor control system into higher-level distributed or supervisory control systems.

The purpose of this segment is to highlight the conceptual framework within which these control objectives and methods of meeting them can be understood.

16.3 COMPRESSOR MAPS

An axial or centrifugal compressor raises the pressure of a gas via energy added to it. If inlet conditions, rotational speed, and guide vane angle are held constant, the amount of energy added per unit mass (polytropic head) of gas will depend only on the inlet volumetric flow rate. Thus, we can construct compressor characteristics in terms of polytropic head and volumetric flow in suction.

The specific mechanical energy of a fluid is defined as

$$e_m = \frac{p}{\rho} + \alpha \frac{V^2}{2} + gz \tag{16.1}$$

where p = static pressure
ρ = density
V = average (or bulk) velocity
g = gravitational constant
z = elevation

In most applications dealing with gases, the elevation component is insignificant. Thus, we need only be concerned with the first two terms of Eq. (16.1).

Because each of these forms of energy can be expressed as an equivalent elevation (head), they are often referred to as the *pressure head and velocity head.* As explained earlier, they will have units such as ft-lb_f/lb_m (kJ/kg) if expressed as specific energies, or simply ft (m) when expressed as elevations.

A compressor uses a two-stage process to increase the pressure of its process stream. First, the mechanical energy of the rotor is transferred to the fluid, resulting in its acceleration—and increasing its kinetic energy. Most of the velocity head is then converted to an increase in pressure head by decelerating the fluid through a diffuser.

The work added to the fluid in the compressor depends on the path that the state of the gas takes as it passes from suction to discharge. However, this energy can be characterized by choosing a particular path having the same end points as that of the actual fluid. The path often chosen is a *polytropic compression* path. The overall increase in fluid specific mechanical energy is referred to as the *polytropic head* (H_p). The ratio of the change in mechanical energy divided by the change in stagnation enthalpy (mechanical plus internal energy) is defined as the *polytropic efficiency.*

Unfortunately, it is not possible to measure polytropic head directly—it must be calculated as a function of fluid properties and several measurable process variables. By integrating the thermodynamic relationship for work over a polytropic path, it can be shown that

$$H_p = \frac{Z_a R_u T_s}{\mathrm{MW}} \frac{R_c^\sigma - 1}{\sigma} \tag{16.2}$$

where Z_a = average compressibility factor
R_u = universal gas constant
T_s = suction temperature (absolute)
MW = molecular weight
R_c = pressure ratio (p_d/p_s)
σ = exponent, $(k - 1)/k\eta_p$
k = ratio of specific heats (c_p/c_v)
η_p = polytropic efficiency

The polytropic head developed by a specific compressor will vary as a function of the inlet volumetric flow rate, rotational speed, position of the guide vanes, and suction conditions.

Like polytropic head, volumetric flow in suction must be calculated as a function of fluid properties and process variables that can be measured directly. For orifice plates and venturi meters (which are, perhaps, the most commonly used flow-measuring instruments), it can be shown that

$$Q_s^2 = \frac{Z_s R_u T_s}{\mathrm{MW}} \frac{\Delta p_{o,s}}{p_s} \tag{16.3}$$

where Z_s = suction compressibility factor
R_u = universal gas constant
T_s = suction temperature (absolute)
MW = molecular weight
$\Delta p_{o,s}$ = pressure drop across an orifice plate
p_s = suction pressure (absolute)

Thus, compressor performance is often illustrated by plotting characteristic curves in H_p vs. Q_s. For a given speed and inlet guide vane angle, this will produce a single performance curve at constant inlet conditions. By allowing either the rotational speed or guide vane angle to take a series of discrete values, we can generate a family of performance curves, which is called a *compressor map*. It is important to note that in the coordinates (Q_s,H_p), the performance curves are valid only for the given inlet conditions.

In a similar fashion, constant-resistance curves could be used to plot the amount of energy that must be added to the fluid to sustain a given flow rate. Each of these curves represents some possible combination of gas properties, inlet and outlet piping, valve positions, back pressures, and operating devices.

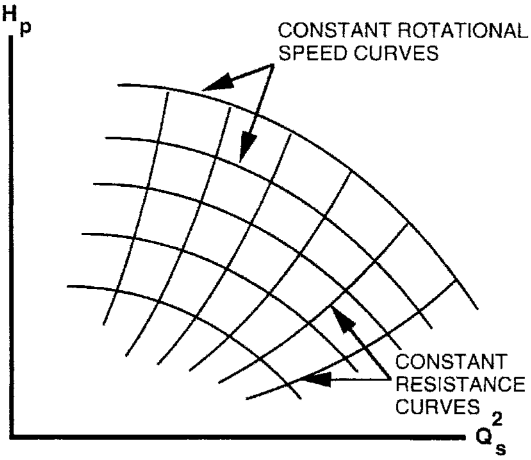

FIGURE 16.1 Typical compressor performance map. *(Compressor Controls Corporation, Des Moines, Iowa)*

The shape of the resistance curves depends on the characteristics of each specific application. For flow-through pipes, energy required will be approximately proportional to volumetric flow squared. Plotting resistance curves in the coordinates H_p vs. Q_s^2 would then yield a series of straight lines radiating from the origin. In general, however, the exact shape of the resistance curves will defy simple analysis. Fortunately, it is rarely necessary to know their exact shape, so we will represent them as a series of generic curves.

The performance map for a compressor system can be illustrated by superimposing both performance and constant resistance curves (see Fig. 16.1). At any given instant, the value of the compressor's independent variable (such as rotational speed) will determine which performance curve it operates along. Similarly, the resistance of the network at that instant will determine the position of the current line of constant resistance. The intersection of these two curves is called the *operating point.*

The flow rate at this point is such that the amount of energy added by the compressor is equal to that required to overcome the network resistance. The coordinates of the operating point thus represent the volumetric flow rate through, and polytropic head developed by, the compressor.

16.3.1 Invariant Coordinates

As noted above, the compressor performance curves in the coordinate system (Q_s,H_p) are unique for the suction conditions given. In practice, the inlet conditions are not constant, so for the purposes of control, the coordinates used must be invariant to changes in inlet conditions. Performing dimensional analysis on the parameters important to compressors results in several possible coordinates suitable for control. Two of these are presented here.

The first is *reduced polytropic head* (h_r) vs. *reduced flow rate* in suction (q_s). (For the same reasons as stated earlier, it is convenient to square the reduced flow rate.) These coordinates are defined as

$$h_r \equiv \frac{R_c^\sigma - 1}{\sigma} \tag{16.4}$$

$$q_s^2 \equiv \frac{Q_s^2(\mathrm{MW})}{Z_s R_u T_s} \propto \frac{\Delta p_{o,s}}{p_s} \tag{16.5}$$

where R_c = pressure ratio (p_d/p_s)
σ = exponent $(k - 1)/k\eta_p$
k = ratio of specific heats (c_p/c_v)
η_p = polytropic efficiency
MW = molecular weight
Z_s = suction compressibility factor
R_u = universal gas constant
T_s = suction temperature (absolute)
$\Delta p_{o,s}$ = pressure drop across an orifice plate in suction
p_s = suction pressure (absolute)

The second coordinate system is *pressure ratio* (R_c) vs. *reduced flow rate* in suction (q_s). This combination has been in use for many years and remains a basis for many surge control systems. This has the advantage of requiring only pressure and flow measurements. Often, however, using reduced head, h_r, results in a more invariant surge line.

From the (q_s^2,R_c) coordinate system comes the common surge control system based on Δp_c and $\Delta p_{o,s}$. This is constructed by assuming a surge control line that satisfies

$$R_c - 1 = C\frac{\Delta p_{o,s}}{p_s} \tag{16.6}$$

The derivation is

$$\begin{aligned} R_c - 1 &= C\frac{\Delta p_{o,s}}{p_s} \\ \frac{p_d - p_s}{p_s} &= C\frac{\Delta p_{o,s}}{p_s} \\ p_d - p_s &= C\Delta p_{o,s} \\ \Delta p_c &= C\Delta p_{o,s} \end{aligned} \tag{16.7}$$

Note that the gas composition is not required to calculate any of these coordinates. In application, reduced flow rate is calculated using the differential pressure, $\Delta p_{o,s}$, from the flow measurement device divided by suction pressure, p_s so temperature, gas molecular weight, and compressibility are not required.

It should be pointed out that these coordinates are not invariant to variations in isentropic exponent k. However, since k does not vary considerably in most applications, this does not present a problem. Therefore, although the term *invariant* is used, it should be remembered that these coordinates are *nearly invariant.*

Using either of these coordinates for a compressor without inlet guide vanes, the surge limit line is represented by a single curve that is stationary with changing inlet conditions. The rotational speed is not required to determine the relative distance between the operating point and the surge control line.

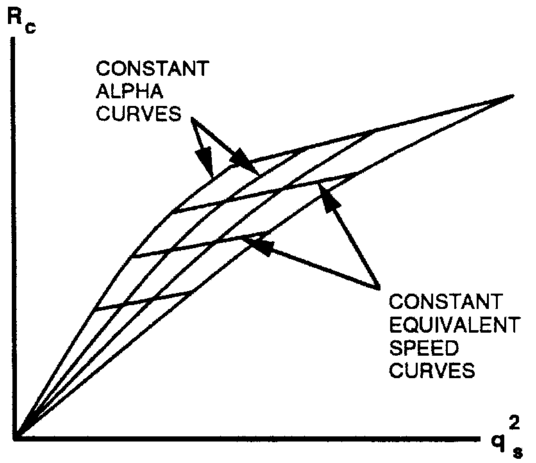

FIGURE 16.2 Compressor performance map for a compressor with variable inlet guide vanes. *(Compressor Controls Corporation, Des Moines, Iowa)*

For compressors with inlet guide vanes, the surge limit is represented by a family of curves that do not depend on suction conditions (Fig. 16.2). In this case, along with the two basic coordinates (reduced polytropic head *or* pressure ratio, and reduced flow rate), another coordinate may be required. This additional coordinate could be either guide vane position, α, or *equivalent speed,* N_e, defined as

$$N_e \equiv \frac{N\sqrt{\text{MW}}}{\sqrt{Z_s R_u T_s}} \tag{16.8}$$

where N = rotational speed
MW = molecular weight
Z_s = suction compressibility factor
R_u = universal gas constant
T_s = suction temperature (absolute)

Note that the gas composition must be known to calculate equivalent speed. This is due to the appearance of molecular weight in the definition.

Although compressor maps are rarely presented in these invariant coordinates, these are the preferred systems for control. This is due, not only to their invariance, but also to the fact that gas composition is not required for their calculation (with the exception of equivalent speed).

Some variations and simplifications of the invariant coordinates are possible. Some other signals that are possible to use to produce invariant coordinates are the differential pressure across the compressor, Δp_c, and the flow measurement in discharge represented by the differential pressure, $\Delta p_{o,d}$.

16.4 PERFORMANCE CONTROL

One of the basic objectives of a compressor control system is to regulate the output of the compressor to meet the varying needs of the overall process. That objective is accomplished by

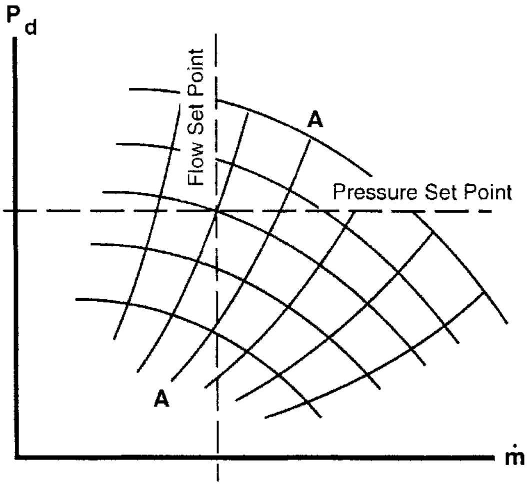

FIGURE 16.3 Compressor map showing typical performance control set points. *(Compressor Controls Corporation, Des Moines, Iowa)*

manipulating a *performance control element.* This control element might be a suction or discharge control valve, guide vane positioner, or rotational speed governor. It would serve to maintain a process pressure or flow rate at a *set point* value.

When illustrating performance control, it is helpful to redefine the compressor map coordinate system. For example, we might plot discharge header pressure against mass flow through the compressor (see Fig. 16.3). The set point will then appear as either a horizontal or a vertical line, depending on whether we want to maintain constant pressure or constant mass flow, respectively.

To achieve this coordinate system transformation, we must define the control element to be part of the compressor system rather than part of the network. Thus, repositioning a control valve moves the performance curve rather than the network resistance curve.

Defining the coordinate system in this way implies that any independent process variables (such as fluid composition) have constant values, so that each point in the H_p vs. Q_s coordinate system corresponds to a unique point in the new coordinate system. Changes in any of these variables would change the shape and position of the performance and resistance curves.

Within this transformed coordinate system, the discharge pressure and flow rate are determined by the intersection of the performance and resistance curves, corresponding to the current control element position and network resistance. The control system must manipulate the control element in response to changes in network resistance and gas properties, so that the operating point is kept as close to the set point line as possible.

For example, assume that the compressor of Fig. 16.4 is operating at point 1, which is on the set point line. If the network resistance decreases, the operating point will move along the performance curve to point 1′, where it intersects the new resistance curve. To restore set point operation, the control system must reposition the control element to select the performance curve that intersects the new resistance curve at the new operating point 1″.

Consider a hypothetical situation in which all of the assumptions made in transforming the coordinate system were valid, the process and control system were free of dynamic effects, and the equations of the performance and resistance curves were known. Then the control system might (at least theoretically) be able to deduce changes in network resistance from

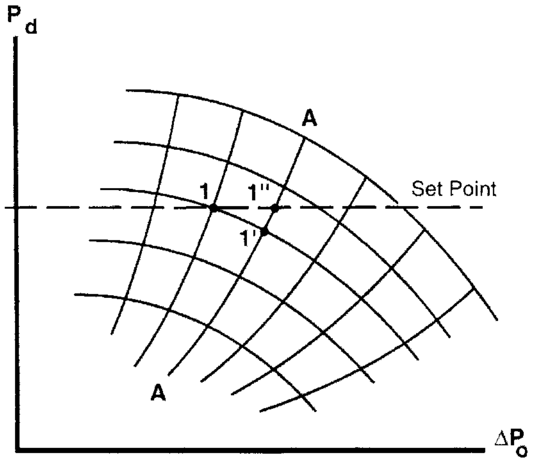

FIGURE 16.4 Compressor map illustrating typical performance control response. *(Compressor Controls Corporation, Des Moines, Iowa)*

the position of the control element and the value of the controlled variable. At that point the controller could calculate the exact position required by the system to satisfy the control objectives.

In general, none of these conditions can be met. Performance control algorithms must therefore be able to adapt to changes in process parameters that are not (or cannot) be measured. They must be able to overcome dynamic effects and time delays while dealing with the uncertainties in our knowledge of compressor performance and network resistance characteristics. They have to circumvent the difficulties associated with solving even approximate models of these imperfectly understood relationships in real time (usually by *not* solving them at all).

So our hypothetical situation doesn't exist in the real world. As a solution to these problems, we must construct a control system in another way. Very simply, the alternative of choice is a control scheme that always acts in a fashion that reduces the error between the operating point and the set point. This is explained in the following section.

16.4.1 PI and PID Control Algorithms

The commonly used proportional–integral (PI) and proportional–integral–derivative (PID) control algorithms provide the adaptable method needed to control imperfectly known compression systems. The basic premise of these algorithms is that the controller output should be a function of the difference (which is called the *error,* ϵ) between the value of the controlled variable (or *process variable,* PV) and its *set point* (SP).

$$\epsilon = \mathrm{SP} - \mathrm{PV} \tag{16.9}$$

The controller output is calculated as the sum of a constant steady-state value and several bias terms that are functions of the error:

$$\mathrm{OUT}_{\mathrm{PI}} = \mathrm{SS} + P + I \tag{16.10}$$

$$\mathrm{OUT}_{\mathrm{PID}} = \mathrm{SS} + P + I + D \tag{16.11}$$

where OUT = value of controller output signal
SS = steady-state component
$P \propto \epsilon$ (instantaneous error)
$I \propto \epsilon\, dt$ (integral error)
$D \propto d\epsilon/dt$ (derivative error)

To understand how these algorithms work, imagine an application in which the goal is to maintain a steady 100-psig discharge pressure. Assume the compressor is initially operating at steady state with its suction throttle valve open 75%. Because the compressor is in steady state and the valve is not at a limit, the error must be zero. Therefore, the instantaneous and derivative errors are zero, and the integral error is constant. Thus, the controller output will not change until the compression system is perturbed or the set point is changed.

Now assume that the downstream process system resistance decreases so that the control valve must be increased to 80% open to maintain the desired set point of 100 psig pressure. A 75% open valve would then produce a lower-than-desired pressure. Because the controller is unable to calculate the required new valve setting directly, an intelligent trial-and-error approach must be taken: Simply open the valve a specified amount, monitor the result, and proceed as required from there. This type of approach is known as *closed-loop control.*

The relationship between valve opening and discharge pressure is unknown. However, a good starting point is to assume that the additional valve opening should be approximately proportional to the pressure change: A large pressure variation is countered by a large change in the valve position. This assumption leads to the proportional term of the PID algorithm.

Returning to the example above, note what happens if the control were proportional *only* (the integral and derivative terms both set to zero). With the suction throttle valve at 75% open, the discharge pressure would decrease, causing the error (and thus the output) to rise. Resetting the output to 80% causes the pressure to increase, reducing the error (and thus the output). Note that if the pressure error were to go to zero, the output would go to SS since the control system is proportional only. Therefore, there is an intermediate level at which the error and the output (both nonzero) stabilize, leaving the pressure below its set point.

For example, assume that a valve opening of 78% would yield a steady 98-psig discharge pressure. If a 2-psig error produced a 3% proportional response (starting at a valve position of 75%), the output of the controller at 98 psig would be 78%—the exact valve setting needed to maintain that pressure. The discharge pressure would thus stabilize at 98 (instead of the desired 100) psig. The resulting 2-psig disparity is known as a *proportional offset.*

Proportional offsets are eliminated by adding an integral term to the control algorithm. Because this integral will accumulate whenever the error is nonzero, the control action cannot stabilize unless the controlled variable is at its set point. At steady state, then, the proportional part is zero (because the error is zero), but the integral term equals the value required to keep the error at zero.

Therefore, the steady-state controller output is actually the sum of the steady-state and integral error terms. As a result, the steady-state term loses its special significance and is usually merged into the integral term.

In the PID algorithm only, another term is added that is proportional to the first time derivative of the error. The basic premise behind including this term is that the magnitude of the control response should be modulated according to how fast the error is changing.

For example, a fairly large response would be appropriate if the pressure was too low and still falling. In contrast, a smaller response would be warranted if the pressure was too low but rising.

The practical effect of including the derivative term is that it often allows the control response to be accelerated without increasing the risk of instability. However, derivative control will also make the system more sensitive to signal noise. Thus, the simpler PI algorithm is sometimes more appropriate than full PID control.

16.4.2 Stability Considerations

Improper tuning can render either the PI or PID algorithm (or even simple proportional control) unstable (see Fig. 16.5). To gain a qualitative appreciation of how this can occur, consider the PI response to a step change in set point for a process initially operating at steady state.

Initially, the integral of the error is constant. So the output changes proportionately to the magnitude of the step change, countering its effect and thus decreasing the error. With purely proportional control, the system will tend toward a new steady state characterized by a proportional offset of the controlled variable relative to its set point.

However, because of the natural inertia of the system, changes in the process will lag behind the control signal. Because that signal will reach its new value before the controlled variable does, the control action will overshoot. As a result, the controlled variable will also overshoot, causing the control action to reverse. The overall process will therefore oscillate about the new steady-state conditions. Proper tuning of the control response will damp out these oscillations.

The magnitude of the overshoot will depend on the value of the control system's proportionality constant (which is known as the *proportional gain*). Increasing this gain will accelerate the control response, reduce the proportional offset, and increase the overshoot. If the proportional gain is set too high, each successive overshoot will be larger than its predecessor, resulting in an unstable system.

Adding an integral control action has the effect of increasing the system inertia and thus exacerbates the risk of instability. The reason is fairly simple—both the error and its integral will lag behind changes in the controller output. The proportional and integral gains must both be compromised to maintain system stability. As mentioned earlier, however, the integral term allows the control system to reduce the error to zero.

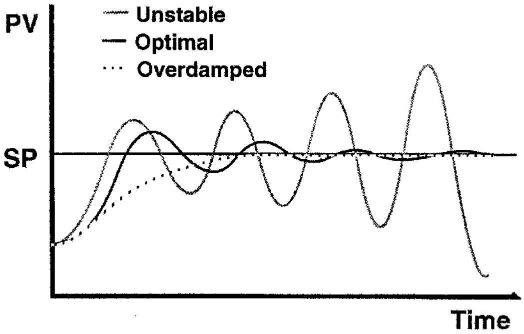

FIGURE 16.5 System response to improper tuning of the PID algorithm. *(Compressor Controls Corporation, Des Moines, Iowa)*

On the other hand, adding a derivative term can reduce the risk of instability. This is because the derivative of the error is a measure of how fast the system is responding. If the system becomes unstable, the derivative action will tend to counter the oscillatory action.

16.4.3 Integral or Reset Windup

A PID controller may encounter situations in which changing the output signal cannot reduce the error to zero. For example, suppose that our control objective is to maintain a constant fluid level in a storage tank by manipulating an inlet valve to balance the inlet and outlet flows. Even with the valve fully open, the feed rate might prove insufficient to maintain the desired level. The control system cannot manipulate the controlled variable to eliminate this problem.

In such a situation, the integral error would continue growing indefinitely, eventually reaching a saturation value. Then if the flow rates change so that the level becomes too high, the PID loop must integrate the error (which is now opposite in sign) for some time to reduce its value from the saturation level to a magnitude that allows the valve position to come off 100% open. So the control system is unable to respond rapidly enough to sudden decreases in outflow, possibly causing the tank to overflow.

The breakdown of control under such circumstances is referred to as *integral* or *reset windup.* Compressor control systems that employ PI or PID algorithms must be able to recognize and respond to this condition by disabling the integral portion of the algorithm, setting it to a constant (generally nonzero) value.

16.5 PERFORMANCE LIMITATIONS

As shown previously, a compressor increases the pressure of the process gas by first accelerating the fluid and then converting the resulting kinetic energy into an increased pressure head. Thus, the maximum polytropic head that can be developed is limited by the tip speed of the impeller blades. Polytropic head is observed to be a decreasing function of volumetric flow.

At any given rotational speed and inlet conditions, the performance of the compressor is limited not only by this maximum polytropic head but also by a maximum flow rate. These limitations are illustrated on the typical performance curve shown in Fig. 16.6.

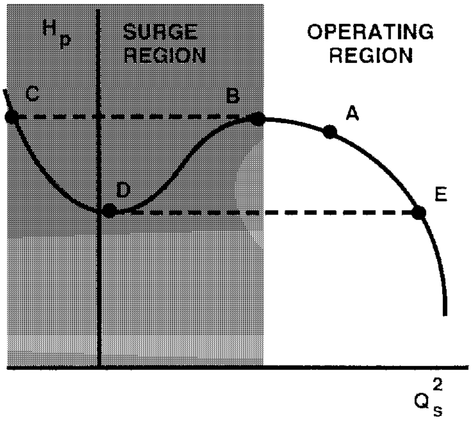

FIGURE 16.6 Performance curve illustrating typical performance control response. *(Compressor Controls Corporation, Des Moines, Iowa)*

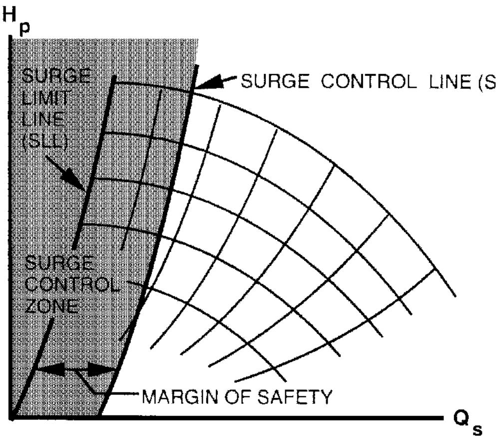

FIGURE 16.7 Compressor map showing the surge limit line, surge control line, and surge control zone. *(Compressor Controls Corporation, Des Moines, Iowa)*

16.5.1 Surge Limit

Consider the scenario of a constant-speed compressor with fixed suction conditions. This compressor is initially at steady state, so the operating point is stationary. If the network resistance increases, the operating point will move along the performance curve to the left. Eventually, a point of minimum stable flow and maximum polytropic head is encountered. Operating the compressor to the left of this point can induce a potentially destructive phenomenon known as *surge*. This point is known as the *surge limit point.* The locus of all such points defines a curve known as the *surge limit line* (SLL), shown in Fig. 16.7.

The onset of surge can be visualized by considering a simple system consisting of a compressor and discharge valve. If this system were operating in steady state, there would be no accumulation of the process gas (over time) in the plenum between the two elements. In Fig. 16.6, this point is represented by *A*.

If the valve were then closed slightly, the flow rate through it would drop. Process gas would accumulate in the plenum, causing a pressure increase. This would, in turn, cause a decrease in the flow through the compressor and an increase in the flow through the valve, until they were once again equal. The new steady-state flow rate would be lower than it was originally, and the new plenum pressure would be higher.

If the valve continued to close in small steps, the compressor would approach its surge limit (point *B* in Fig. 16.6). This approach would be noticeable when a relatively large drop in flow produced a small increase in the final plenum pressure. In other words, the slope of the compressor characteristics tends to reduce in magnitude near the surge limit point.

At the surge limit point, closing the valve further would cause the flow to decrease. As shown in Fig. 16.6, the compressor could not achieve the pressure required to maintain the flow less than that of the surge point. The result is that the flow through the compressor would drop precipitously, typically reversing in approximately 20 to 80 ms (see Fig. 16.8). This is shown as the dashed line *B–C* in Fig. 16.6. The operating point cannot reside on the portion of the curve between *B* and *D.* Note that the flow drops off before the pressure. This can be seen in the top plot in Fig. 16.8.

At point *C*, the flow would be negative, but energy is still being added to the fluid. The plenum would begin to depressurize due to the net efflux of fluid. The trajectory of the

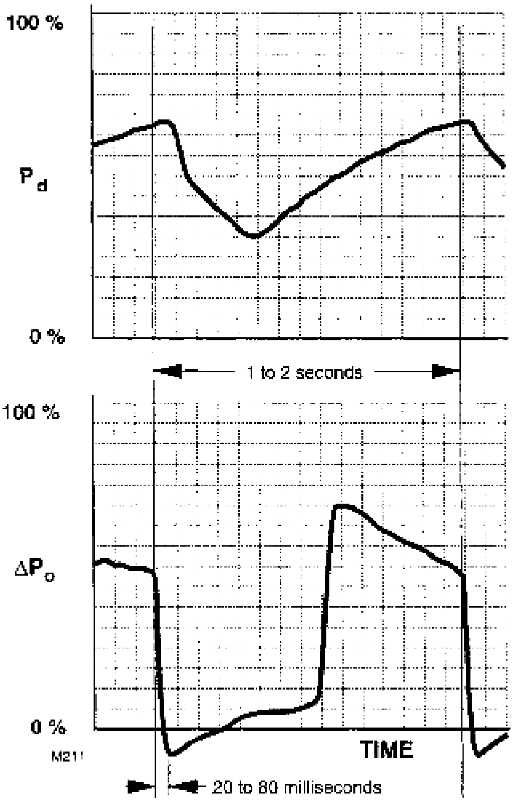

FIGURE 16.8 Pressure and flow variations during typical surge cycles. *(Compressor Controls Corporation, Des Moines, Iowa)*

operating point would be from *C* to *D* in Fig. 16.6. At point *D*, the compressor, once again, reaches the region of the curve on which it cannot reside. At this point the flow quickly jumps to point *E*, where the compressor is in the “safe region.”

With the discharge valve at the position that caused the surge in the first place, if no other action is taken, the compressor will travel from *E* to *A* and then repeat the cycle. The oscillatory pattern will continue until some action occurs to stop it (e.g., opening the discharge valve) or the compressor fails.

During surge, the severe oscillations of flow and pressure create heavy thrust bearing and impeller loads, vibration and rising gas temperatures. If more than a very few surge cycles are experienced, process upsets and severe compressor damage are likely to result. The past decade has brought on a better understanding of the various modes of instability associated with compressors.

16.5.2 Stonewall

Again, consider a constant-speed compressor with fixed suction conditions. As network resistance decreases, the operating point will move along the performance curve to the right.

Eventually, a point of maximum flow and minimum polytropic head is encountered, beyond which further decreases in network resistance will not increase the flow rate. This is known as the *choke point,* or *stonewall.*

The physical phenomenon is that the gas velocity has increased to the local acoustic velocity (therefore, Mach 1) at some point in the compressor. When choke occurs, the flow rate cannot increase unless conditions change in the choked region.

Stonewall is not particularly damaging to single-stage centrifugal compressors but can cause serious damage to the rotors and blades of multistage centrifugal and axial compressors. In such situations, a suitably designed antichoke controller can be used to manipulate an antichoke control valve, thus maintaining sufficient system resistance to prevent choke.

16.6 PREVENTING SURGE

Surge occurs when the network resistance becomes too high for the compressor to overcome. The obvious way to prevent surge is to decrease network resistance whenever the operating point moves too close to the surge limit line. This is accomplished by opening an antisurge valve to recycle or discharge a portion of the total flow.

The chief drawback to this approach is the efficiency penalty that it entails—the energy that was used to compress the recycled gas goes to waste. Thus, the control system should be tailored to open the antisurge valve only when—and only as far as is—necessary. On the other hand, if we do not provide adequate protection against surge, we risk prohibitive repair and downtime costs.

Therefore, accurate and dependable methods of determining the surge limit are required. Antisurge control entails measuring the distance between this surge limit and the operating point and then maintaining an adequate margin of safety without sacrificing efficiency or stability.

The solution is to maintain the operating point on or to the right of a line known as the *surge control line* (SCL; see Fig. 16.7). The distance between the surge control and surge limit lines (the margin of safety) should be just enough to allow the chosen control algorithms to counteract an impending surge.

Whenever the operating point moves into the *surge control zone* (i.e., to the left of the SCL), the antisurge valve must be opened fast enough to keep the operating point from reaching the surge limit line and far enough to return it to the surge control line. On the other hand, when the operating point moves to the right of the SCL, the antisurge valve should be closed as far as possible without moving the operating point into the surge control zone.

16.6.1 Antisurge Control Variables

Like H_p and Q_s, the distance between the operating point and the surge limit line cannot be measured directly. Nor is there a standard definition relating it to parameters that can be measured. Thus, antisurge protection algorithms can be based on any function of measurable process variables that satisfies the following criteria:

- It should vary monotonically as the operating point approaches the surge limit so that the required control action is never ambiguous (if not, there must be a means of resolving any ambiguities).

- It must be invariant to any aspect of the process that might change so that the compressor is adequately protected in all possible situations.
- It must be easily calculated from process variables that can be accurately measured or assumed constant.
- It should be most sensitive to changes that occur when the operating point is near the surge limit.

The obvious possibilities include combinations of the coordinates presented in Section 16.3. Other, less obvious candidates include functions of the compressor drive power or rotational speed, all of which meet these criteria for at least some applications.

The existence of guide vanes may complicate antisurge control. In general, the guide vane angle, α, must be included as part of the variable used for determining the distance between the operating point and the surge control line.

One variable that has advantages of control on flow as well as pressure is a ratio of a function of the ordinate to the abscissa. From Section 16.3, choosing the (q_s^2, R_c) coordinate system, the antisurge control variable, S_s, would be calculated as

$$S_s = \frac{f(R_c)}{q_s^2} \tag{16.12}$$

where $f(\cdot) = q_s^2|\text{surge}$
R_c = compressor pressure ratio, p_d/p_s
$q_s^2 = \Delta p_o/p_s$

The surge limit line is therefore a line of $S_s = 1$. As shown in Fig. 16.9, lines of constant S_s comprise a family of curves that emanate from the origin. They are similar in shape to the surge limit line and diverge from the surge limit line. Using this method, comparing the value of S_s to unity gives a relative distance to surge.

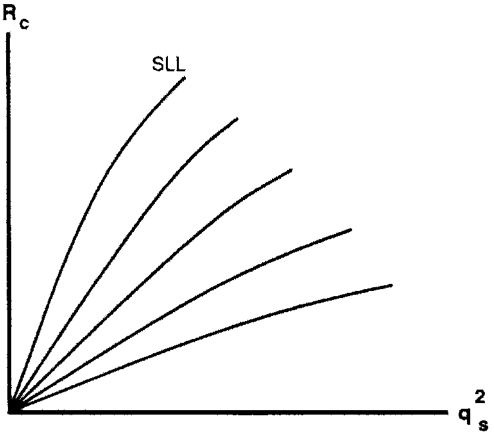

FIGURE 16.9 Compressor performance map showing lines of constant surge control variables S_s. *(Compressor Controls Corporation, Des Moines, Iowa)*

16.6.2 Antisurge Control Algorithms

In performance control, the goal is to minimize deviations of the controlled variable from its set point; variations to either side are of approximately equal concern. In contrast, the goal of an antisurge controller is to maintain the controlled variable to one side of an absolute limit; deviations to the other side must be prevented at any cost.

Thus, good antisurge control uses a combination of the following types of control responses:

- Opening and closing the control valve to maintain the operating point on or to the right of the surge control line without allowing deviations to the left of the surge limit line.
- Moving the surge control line (relative to the surge limit line) to adapt the margin of safety to changing process conditions.

The first of these points may be accomplished by simple closed-loop (PI or PID) control if the safety margin is great enough. To reduce the safety margin (thereby increasing the operating range and efficiency of the compressor), rapid increase of the recycle valve set point is expedient.

Another aspect of this issue was noted earlier. The safety margin should be increased if surge occurs under a large disturbance. This reduces the chance that surge will recur under a similarly large disturbance.

Another aspect of this issue is to increase the safety margin *dynamically* when surge is threatening. Basing this adjustment on the derivative of the approach (from the right of the surge control line *only*; see Ref. 1) results in a control scheme that does not compromise stability. It also provides for earlier opening of the recycle valve under fast disturbances.

16.6.3 Controlling Limiting Variables

The third major responsibility of an integrated compressor control system is to counteract undesirable changes in any process-limiting variables. The limitation involved might be required to protect the compressor or other process equipment (e.g., preventing excessive motor current, bearing temperatures, or excessive pressures). Or it may be necessary to protect the process gas from conditions, such as an excessive discharge temperature, that could chemically degrade or otherwise damage its quality.

In an integrated control system, we are concerned with two categories of process-limiting variables: those that must be controlled by opening the antisurge valve and those that must be controlled by manipulating the performance control element.

Limiting variables that fall into the first category can be controlled by the antisurge controller, provided that it has such a capability. Otherwise, an additional controller must be used, along with a switching device that can dynamically assign control of the antisurge valve to the appropriate controller.

Similarly, if there are limiting variables that can only be controlled by manipulating the performance control element, it is necessary to use either a performance controller with multivariable capabilities or multiple controllers along with an appropriate switching circuit.

Regardless of which approach(es) are chosen, it is necessary to provide protection against integral windup in any control loop using a PI or PID algorithm. When multivariable controllers are used, the operator may or may not be allowed to override automatic control of any or all of those variables.

16.7 LOOP DECOUPLING

The action of the antisurge control system can upset the performance control operation, and vice versa. In networks of compressors, the antisurge control actions between the various cases may also require decoupling. The potentially conflicting effects of interacting control loops can be counteracted by implementing a loop decoupling algorithm.

For example, if the performance controller (PIC) in Fig. 16.10 needs to reduce the downstream flow rate, the rate at which it closes its control valve may need to be compromised to avoid destabilizing the system. The optimum response will depend on the proximity of the compressor's operating point to the surge line.

If the compressor was operating on its surge control line, reducing the flow rate would move the operating point into the surge control zone. The antisurge controller (UIC) would respond by opening the recycle valve, which would have the side effect of further reducing the downstream flow rate. The performance controller would then need to increase the flow rate, which would (in turn) cause the antisurge controller to reduce the opening of its valve.

These interactions would render both loops more oscillatory and therefore less stable. Stability could be restored only by tuning the controllers less aggressively, thus making them less effective when operating well away from the surge limit. Unless some provision was made for coordinating the two loops, neither could be optimally tuned for all situations.

This problem can be overcome by having the controllers monitor and compensate for changes in each other's outputs. This feedforward control action would allow the performance controller to moderate its actions when the antisurge valve was opening, and vice versa. The loop interactions would thus be decoupled: The actions taken by each controller would then be correct regardless of what the other was doing.

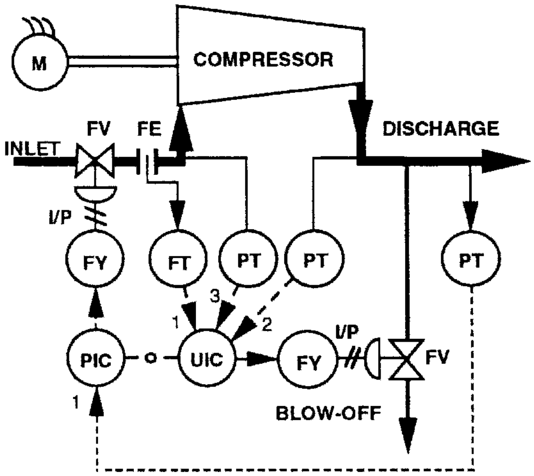

FIGURE 16.10 Interacting performance and antisurge control loops. *(Compressor Controls Corporation, Des Moines, Iowa)*

16.8 CONCLUSIONS

Compressor control is not only critical (from an economic standpoint), it is a challenging controls problem. Compression systems are typically dynamic, with lags and delays that make it difficult—most of the time impossible—to control them with a simple PID approach. The antisurge variable used for control should be selected carefully to provide accurate prediction regardless of the inlet conditions of the compressor.

It is important to integrate the various control tasks surrounding the compressor: antisurge, performance, limiting, and so on. When the compression system involves multiple compressors, a method of balancing the load between compressors may be required. This method should combine maintaining the performance variable at its set point while not compromising surge control.

REFERENCE

1. Marketing Literature, Compressor Controls Corporation, Des Moines, Iowa, 1992 and 2004.

17

HEAD-FLOW CURVE SHAPE OF CENTRIFUGAL COMPRESSORS*

Much has been written concerning what goes on in a centrifugal compression stage. Unfortunately, most such literature has been produced by development people for the benefit of other development people and has been presented mostly in bits and pieces in widely scattered technical papers.

The operating supervisor at the plant level and the equipment specialist at the planning level have a real need for an overall understanding of this subject. Such knowledge can help operators to better understand the potentials and limitations of their machines. It should help specialists to determine what can realistically be expected of centrifugal compressors, and it should help in their analysis of competitive offerings.

It is on this premise that the following paragraphs are written: in the hope that in a small way at least, they can build a bridge of comprehension between the centrifugal compressor investigator and the compressor user.

17.1 COMPRESSOR STAGE

This discussion will largely concern itself with the conventional compressor stage [i.e., a radial inlet closed impeller running at 700 to 900 ft/s (213 to 273 m/s) tip speed, feeding a vaneless diffuser]. However, sufficient attention will be given to such variations as inducer impellers and vaned diffusers that a general understanding of most combinations of commonly used hardware should result.

* Developed and contributed by Donald C. Hallock, Centrifugal compressors: the shape of the curve, *Compressor Refresher*, Elliott Company, Jeannette, Pa. (Reprint 93). Originally published in *Air and Gas Engineering*, Vol. 1, No. 1, Jan. 1968, and presented through the courtesy of CAGI.

A Practical Guide to Compressor Technology, Second Edition, By Heinz P. Bloch

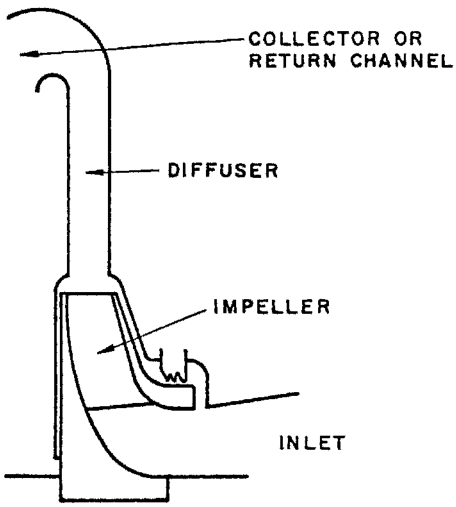

FIGURE 17.1 Impeller and diffuser geometry influence compressor performance curve. (*Elliott Company, Jeannette, Pa.*)

Discussion will center on the *impeller* and *diffuser*, because these are the two key elements in producing characteristic shape (see Fig. 17.1). Poorly designed inlets, collectors, or return channels can naturally affect performance, but their influence on characteristic shape is usually small and will henceforth be ignored.

This discussion is directly applicable to a single-stage machine and to each stage of a multistage machine. The approach taken will be largely qualitative rather than quantitative, because it is not our purpose to produce a design manual, but rather, to produce understanding. A general familiarity of the reader with centrifugal equipment is assumed. Certainly, the preceding pages of this book will be quite helpful in this regard.

17.2 ELEMENTS OF THE CHARACTERISTIC SHAPE

Any discussion of characteristic shape must, like ancient Gaul, be divided into three parts. We have a *basic slope* of head vs. flow, upon which we must superimpose a *choke* or *stonewall* effect in the overload region and a minimum flow or *surge* point in the underload region. The resulting overall characteristic will then be the basic slope as altered and limited by choke at high flow and as limited by surge at low flow in Fig. 17.2. We discuss each of the three parts in turn.

17.2.1 Basic Slope

To understand *basic slope,* it is necessary to look at what is going on at the impeller tip in terms of velocity vectors. In Fig. 17.3, V_{rel} represents the gas velocity relative to the blade. U_2 represents the absolute tip speed of the blade. The resultant of these two vectors is represented by V, which is the actual absolute velocity of the gas. (By vector addition, $U_2 + V_{\text{rel}} = V$.) It can be seen that the length of the vectors and the magnitude of the exit angle a are determined by the amount of backward lean in the blade, by the tip speed of the blade, and by gas velocity relative to the blade, which is in turn dictated by tip-volume-flow rate for a given impeller.

Having the magnitude and direction of the absolute velocity V, we now break this vector into its radial and tangential components, V_r and V_t, as in Fig. 17.4. The vector V_t is reduced somewhat by the slip factor in a real impeller, an effect that can be ignored in a qualitative

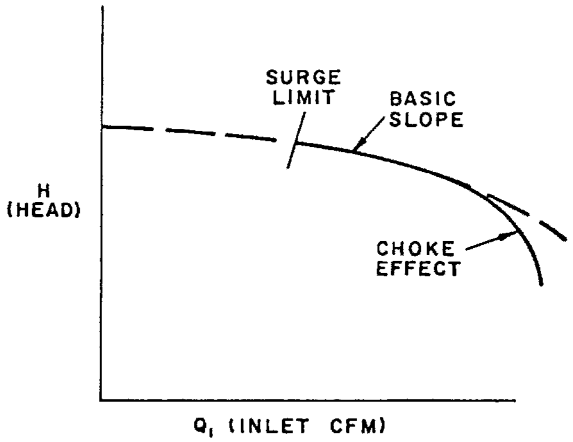

FIGURE 17.2 Characteristic shape of a centrifugal compressor performance curve. (*Elliott Company, Jeannette, Pa.*)

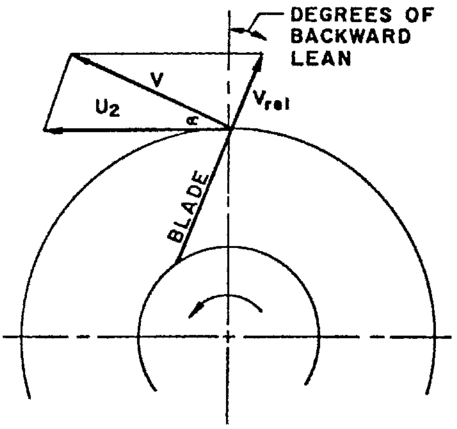

FIGURE 17.3 Blade angle and velocity relationships. (*Elliott Company, Jeannette, Pa.*)

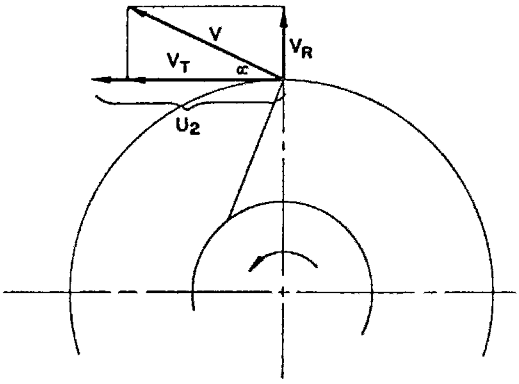

FIGURE 17.4 Resolution of vectors. Note that head output is proportional to product V_tU_2. (*Elliott Company, Jeannette, Pa.*)

discussion such as this. *The head output is proportional to the product of* U_2 V_t. For a given rpm rate, U_2 is constant; therefore, head is proportional to V_t.

Let us now look at what happens to the magnitude of the tangential component V_t as we vary the amount of flow passing through the impeller at constant rpm. As the flow is decreased,

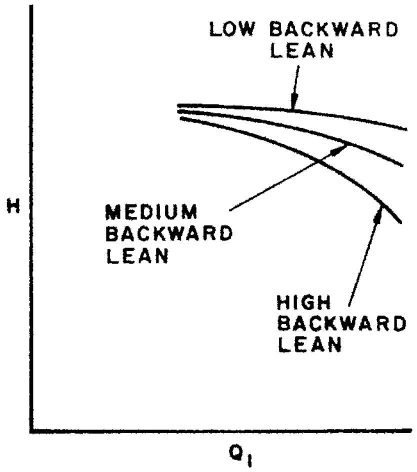

FIGURE 17.5 Effect of blade inclination on head rise. (*Elliott Company, Jeannette, Pa.*)

V_{rel} decreases. As V_{rel} decreases, angle α decreases markedly. This makes V_t increase, which increases head output. This head increase with decreasing flow is the *basic slope* of the stage characteristic.

17.2.2 Blade Angle

How does the degree of backward lean affect the steepness of the basic slope? Picture a radial blade (zero backward lean). V_{rel} is now the same as V_r in Fig. 17.4 and V_t is now equal to U_2. As we reduce the flow in this impeller, V_r and α decrease as before. V_t remains constant, however. Head output therefore remains theoretically constant, regardless of flow. In a real impeller, of course, the head is reduced on increasing flow by a decrease in efficiency attributable to higher frictional losses. The resulting basic slope normally shows a 2% or 3% head rise when going from design flow to minimum flow.

Now let us look at the opposite extreme, an impeller having a very high degree of backward lean: say, 45° off radial at the tip. We can see that a change in flow, and therefore a change in the V_{rel} vector length, will cause very large changes in V_t, and therefore in head. Thus, such an impeller will typically produce a head rise of 20% or more when moving from design flow to minimum flow.

It is evident from the foregoing that the effect of backward lean on head output is minimized at low flow; a high-backward-lean impeller will produce almost as much head at minimum flow as will a low-backward-lean impeller running at the same tip speed. As we move out toward design flow, however, the head difference becomes quite dramatic, as shown in Fig. 17.5. The normal industry standard for conventional closed impellers is represented by the middle line, which is 25 to 35° of backward lean. This configuration is really a compromise between the high head obtainable at design flow with low-backward-lean blades and the steep basic slope obtainable with high-backward-lean blades.

One further point should be made concerning basic slope before we leave the subject. In the foregoing discussion, we used the term *flow* without elaboration, the implication being that impeller-tip-volume rate is dictated by inlet volume rate regardless of the rotative speed and type of gas. This, of course, is not quite true—gases, unlike liquids, being compressible.

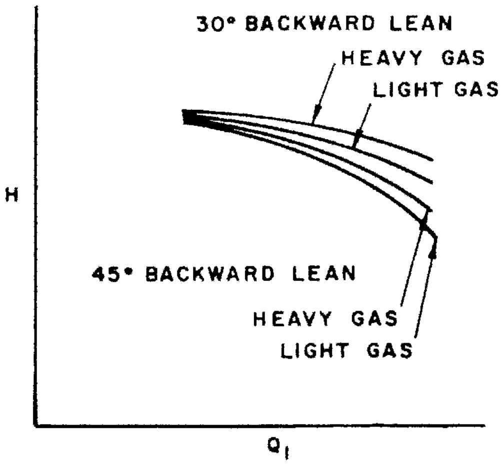

FIGURE 17.6 Effect of molecular weight on the slope of a performance curve. (*Elliott Company, Jeannette, Pa.*)

It is well known that a heavy gas will be compressed to a greater extent in a given stage than a light gas (i.e., the heavy gas has a higher volume ratio).

Therefore, for a given *inlet* cfm entering a given impeller at a given speed, the magnitude of V_{rel} is less for a heavy gas than for a light gas. If the impeller has backward lean, the magnitude of V_t will be greater for the heavy gas. Since head output is proportional to V_t, a given impeller running at a given speed will produce more head when compressing a heavy gas than when compressing a like *inlet* cfm of light gas. What is more, the magnitude of the difference increases at inlet flow increases, so the basic slope of a given backward lean impeller is actually less steep for a heavy gas than for a light gas. The higher the backward lean, the more pronounced this effect (see Fig. 17.6).

17.2.3 Fan Law Effect

The effect of volume ratio on what is known as *fan law* is worthy of mention. The fan law states that the cfm potential of a stage is proportional to the rotative speed and that the head produced is proportional to speed squared. Reexamination of Figs. 17.3 and 17.4 will demonstrate the logic of this law.

If V_{rel} were truly proportional to *inlet* cfm and we increased both inlet cfm and speed by 10%, the head output would be 21% greater, because the tip-vector geometry would maintain exact similarity. Higher head produces a higher volume ratio in a given gas; however, V_{rel} does not increase quite in proportion to speed and inlet cfm. By reasoning similar to that used in discussing heavy gas vs. light gas, then, the head output of a backward-leaning stage handling 10% more inlet cfm at 10% higher speed will increase somewhat *more* than 21%. By similar reasoning, if we reduce speed and inlet flow from 100% to 90%, the head produced will be slightly *less* than the 81% predicted by the fan laws, (Table 17.1).

The *fan laws* (affinity laws) acquired their name from the fact that a fan is a low-head compressor normally handling air, a light gas. Since volume ratio effects are extremely small when imparting a small head to light gas, excellent accuracy can be obtained by the fan laws. As a general rule, the higher the head, the heavier the gas, and the greater the backward lean, the poorer the accuracy obtained by the fan laws will be. As a practical matter, speed changes up to 30 or 40% can be handled with sufficient accuracy for most purposes when dealing with typical single-stage air compressors. A little more discretion must be used on multistage

TABLE 17.1 Fan Laws (Affinity Laws)

1. With impeller diameter D held constant:

A. $$\frac{Q_1}{Q_2} = \frac{N_1}{N_2}$$

B. $$\frac{H_1}{H_2} = \left(\frac{N_1}{N_2}\right)^2$$

C. $$\frac{\text{bhp}_1}{\text{bhp}_2} = \left(\frac{N_1}{N_2}\right)^3$$

where Q = capacity, cfm
H = total head, ft
bhp = brake horsepower
N = compressor speed, rpm

2. With speed N held constant:

A. $$\frac{Q_1}{Q_2} = \frac{D_1}{D_2}$$

B. $$\frac{H_1}{H_2} = \left(\frac{D_1}{D_2}\right)^2$$

C. $$\frac{\text{bhp}_1}{\text{bhp}_2} = \left(\frac{D_1}{D_2}\right)^3$$

When the performance (Q_1, H_1, and bhp_1) is known at some particular speed (N_1) or diameter (D_1), the formulas can be used to estimate the performance (Q_2, H_2, and bhp_2) at some other speed (N_2) or diameter (D_2). The efficiency remains nearly constant for speed changes and for small changes in impeller diameter.

compressors handling heavy gases, however, because fan law deviation can become quite significant for a speed change as small as 10%.

17.2.4 Choke Effect

We have discussed at some length the basic slope of the head-flow curve and have avoided until now the choke or stonewall effect that occurs at flows higher than design and that must be superimposed on the basic slope, as in Fig. 17.2.

Just as basic slope is controlled by impeller-*tip*-vector geometry, the stonewall effect is normally controlled by impeller-*inlet*-vector geometry. In Fig. 17.7 we can draw vector U_1 to represent the tangential velocity of the leading edge of the blade (similar to U_2 at the tip). We can also draw vector V, representing absolute velocity of the inlet gas, which having made a 90° turn is now moving essentially radially—hence the term *radial inlet.* By vector analysis, V_{rel}, which is gas velocity relative to the blade, is of the magnitude and direction

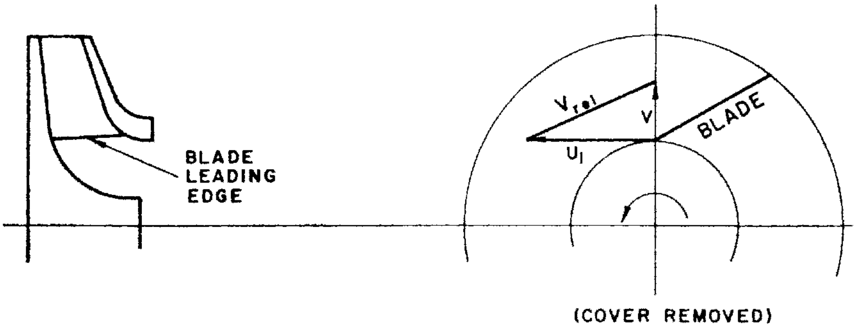

FIGURE 17.7 Velocity relationships at the leading edge of an impeller blade. (*Elliott Company, Jeannette, Pa.*)

shown, where $U_1 + V_{\mathrm{rel}} = V$. At design flow, the direction of V_{rel} essentially lines up with the blade angle as shown.

17.2.5 Mach Number

The magnitude of V_{rel} *compared to the speed of sound at the inlet is called the relative inlet Mach number.* It is the magnitude of this ratio that dictates stonewall in a conventional stage. Although true stonewall should theoretically not be reached until the relative inlet Mach number is unity, it is conventional practice not to exceed 0.85 or 0.90 at design flow.

It is evident from Fig. 17.7 that for a given rpm, the magnitude of V_{rel} will diminish with decreasing flow, since V is proportional to flow. If V_{rel} decreases, relative inlet Mach number decreases, so the stonewall effect is normally not a factor at flows below design. It is also evident that at low flows, the direction of V_{rel} is such that the gas impinges on the leading side of the blade (positive incidence), a factor that is not very detrimental to performance until very high values of positive incidence are reached.

Let us now *increase* flow beyond the design point. As V increases, so do V_{rel} and relative inlet Mach number. In addition, V_{rel} now impinges on the *trailing* side of the blade, a condition known as *negative incidence.* It has been observed that high degrees of negative incidence tend to contribute to the stonewall problem as Mach 1 is approached, presumably because of boundary layer separation and reduction of effective flow area in the blade pack.

17.2.6 Significance of Gas Weight

Since values of U_1 are typically in the range 500 ft/s (152 m/s) and values of V in the range 250 ft/s (76 m/s), it is obvious that air at the speed of sound at 80°F (27°C) = 1140 ft/s (347 m/s), and lighter gases suffer no true impeller stonewall problems as described earlier, even at high overloads. Some head loss below the basic slope will be observed, however, in even the lightest gases, in part because of increased frictional losses throughout the entire stage and the extreme negative incidence at high overloads.

The lightest common gas handled by conventional centrifugals for which stonewall effect can be a definite factor is propylene with a speed of sound of 740 ft/s (225 m/s) at −40°F

(−40°C). In order of increasing severity are propane at 718 ft/s (219 m/s) at −40°F (−40°C), butane, chlorine at 630 ft/s (192 m/s) at −20°F (−29°C), and the various Freons. The traditional method of handling such gases is to use an impeller of larger than normal flow area—to reduce V—and run it at a lower than normal rpm value—to reduce U_1—thus keeping the value of V_{rel} abnormally low. This procedure requires the use of more than the usual number of stages for a given head requirement and sometimes even requires the use of an abnormally large frame size for the flow handled.

17.2.7 Inducer Impeller Effects on Head Output

Much development work has been done in recent years toward the goal of running impellers at normal speeds on heavy gases to reduce hardware costs to those incurred in the compression of light gases. One approach has been to use inducer impellers, as in Fig. 17.8. The blades on this impeller extend down around the hub radius so that the gas first encounters the blade pack while flowing axially. Figure 17.8 shows the vector analysis at the inducer's outer radius. Assuming that the inducer radius is the same as the leading-edge radius of a conventional radial inlet impeller, the vector geometries of the two are identical.

The advantage of the inducer lies in the fact that as we move radially inward along the blade leading edge, the value of U_1 (and, therefore, of V_{rel} and Mach number) decreases. As we move along the leading edge of a *conventional* impeller, the vector geometry remains essentially constant. It can be seen, therefore, that whereas the *maximum* Mach number for the two styles is the same, the *average* Mach number for the inducer is *less* for a given flow and speed. The inducer impeller can therefore be run somewhat faster, resulting in greater head output. The big disadvantage of a closed inducer impeller lies in the difficulty of fabrication. It is obviously more difficult to weld the longer and more curved blade path of an inducer impeller than that of a conventional impeller. Other disadvantages are the greater weight and greater axial space requirement of an inducer impeller over that of a conventional impeller.

Another method of obtaining increased head output for a given Mach number is the reduction of backward lean. This expedient has some disadvantages, however, not the least of which is the flatter curve that results.

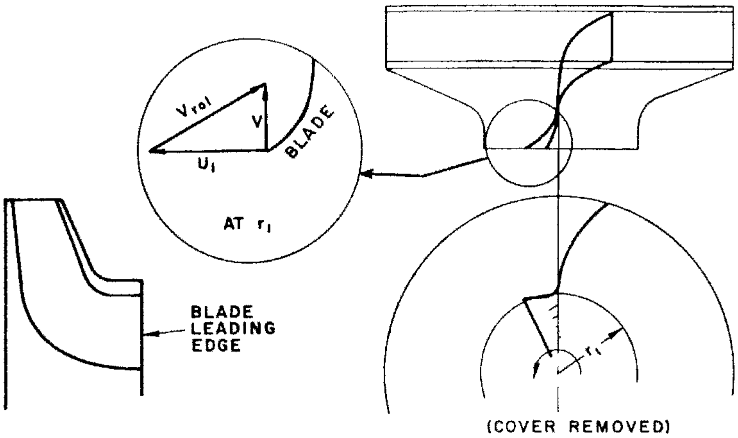

FIGURE 17.8 Vector diagrams for inducer impellers. (*Elliott Company, Jeannette, Pa.*)

17.2.8 Surge

Earlier in the book, surge was discussed from the point of view of compressor control. But having discussed *basic slope* and *choke,* we are left with a vector-based discussion of minimum flow, or *surge.*

Surge flow has been defined by some as the flow at which the head-flow curve is perfectly flat and below which head actually decreases. This definition has a certain appeal, because straddling a surge flow so defined are myriad pairs of flow values producing identical heads, leading one to conjecture that the flow value is actually jumping back and forth between such a pair. However, since numerous centrifugal stages have been observed to run smoothly at flows below such a rate and others to surge at flows above such a rate, this definition must be considered imperfect at best. We must recall that unlike choke flow, which hurts nothing but aerodynamic performance, surge can be quite damaging to a compressor and should be avoided. The higher the pressure level involved, the more important this statement becomes.

To understand what causes surge in a conventional stage, we must refer back to the tip vector geometry of Fig. 17.4. Because flow is reduced while speed is held constant, the magnitude of V_r decreases in proportion, and that of V_t remains constant for radial blades or increases for backward-lean blades. As flow decreases, therefore, the value of flow angle α decreases. In the normal parallel wall vaneless diffuser, this angle remains almost constant throughout the diffuser, so the path taken by a "particle" of gas is a log spiral in Fig. 17.9. The reason that angle α remains constant in a parallel wall diffuser is that both V_r and V_t vary inversely with radius—V_r because radial flow area is proportional to radius and V_t because of the law of conservation of momentum.

It is evident from Fig. 17.9 that the smaller the angle α, the longer the flow path of a given gas particle between the impeller tip and the diffuser outer diameter. When angle α becomes small enough and the diffuser flow path long enough, the flow momentum at the walls is dissipated by friction to the point where pressure gained by diffusion causes a reversal of flow, and *surge results.* The angle α at which this occurs in a vaneless diffuser has been found to be quite predictable for various diffuser–impeller diameter ratios. The flow (and angle α) at which surge occurs can be lowered somewhat by reducing diffuser diameter but at the cost of some velocity pressure recovery.

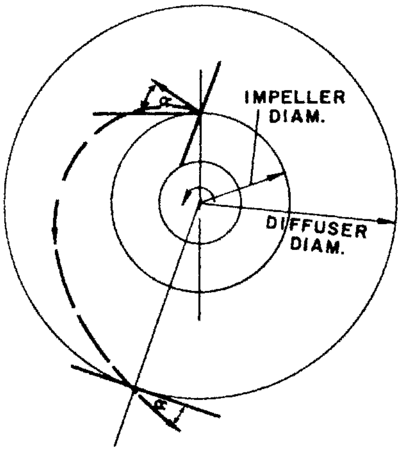

FIGURE 17.9 Spiral path taken by a molecule of gas in an impeller. (*Elliott Company, Jeannette, Pa.*)

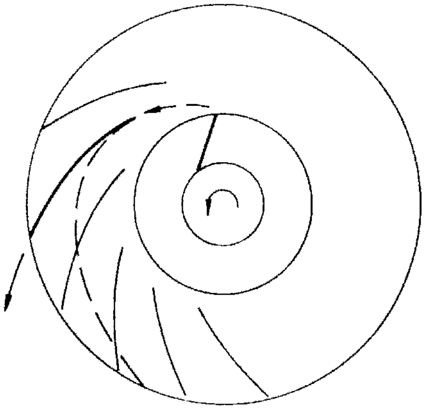

FIGURE 17.10 Vaned diffuser surrounding backward-leaning impeller vanes. (*Elliott Company, Jeannette, Pa.*)

17.2.9 Vaned Diffusers

Before we discuss the foregoing in more detail, let us briefly discuss *vaned diffusers*, devices sometimes used in high-performance machines. Figure 17.10 shows the configuration of diffuser vanes. The vanes force the gas outward in a shorter path than unguided gas would take but not so short a path as to cause too rapid deceleration, with consequent stream separation and inefficiency.

The leading edge of the diffuser vane is set for shockless entry of the gas at approximately design flow. It is evident that at flows lower than design, the gas impinges on the diffuser vanes with positive incidence. Conversely, at flows higher than design, negative incidence prevails. In a typical high-speed high-performance stage, positive incidence at the leading edge of the diffuser vane triggers surge on decreasing flow. On increasing flow, negative incidence at the inducer vanes can cause choking before impeller-inlet stonewall is reached. Despite this disadvantage, vaned diffusion is sometimes used for air and certain other gases because stage efficiency is improved by 2 to 3%. The short-flow range problem can, of course, be alleviated by making the diffuser vanes adjustable.

17.2.10 Vaneless Diffusers

Having made our obeisance to vaned diffusion, let us return to the more common vaneless diffuser. We have seen that when V_r and α become too small, we will have surge. What can we do if our parameters are such that we are faced with a low value for α at design flow? We can increase V_r and α artificially by pulling our diffuser walls together until α reaches the proper value at design flow. This brings to light an important distinction: head output, as discussed earlier, is controlled by vector geometry in the *impeller tip* largely irrespective of what happens in the diffuser. Surge point is controlled by vector geometry in the *diffuser*, largely irrespective of what occurred in the impeller. In the common case where impeller tip width and diffuser width are the same (Fig. 17.1), the two sets of vector geometry are the same—ignoring impeller blade solidity. If such a stage has poor stability, it is frequently possible to lower the surge point by narrowing the diffuser without markedly changing basic slope or choke flow. This procedure can be carried only so far, however, because extreme positive incidence at the impeller inlet will eventually trigger surge regardless of diffuser geometry.

Just as we did when discussing choke flow, let us look at the effect of heavy gas compression on surge point. Since a heavy gas is compressed more at a given speed than is a

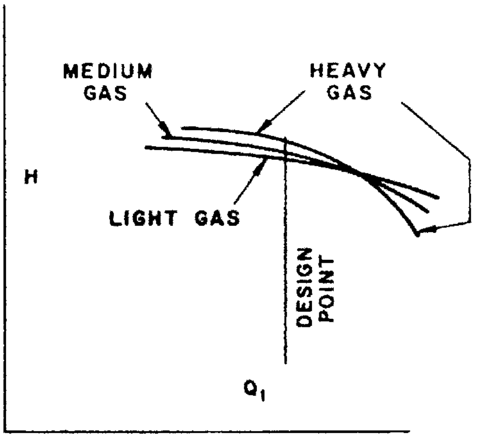

FIGURE 17.11 Head-flow characteristics of a given stage operating on different molecular weight gases. (*Elliott Company, Jeannette, Pa.*)

light gas, it is evident that the critical value for α will be reached (on decreasing flow) at a higher *inlet* flow of heavy gas than that of a light gas. A given stage therefore has a higher surge flow or a lower stable range when compressing heavy gas than when compressing light gas at the same speed.

By similar reasoning, a given stage compressing a given gas at varying speed will surge at somewhat different inlet flows than those predicted by fan law. When speed is 10% above design speed, for instance, surge flow will be *more* than 10% higher than surge flow at design speed. When speed is 90% of design, the stage will surge at *less* than 90% of design-speed surge flow.

We have discussed in some detail the three ingredients involved in a centrifugal compressor characteristic: basic slope, choke, and surge. We have considered how various physical design parameters such as backward lean, inlet blade angle, and diffuser flow angle affect these ingredients. We have also discussed the effect on characteristic shape of compressing different weight cases in a given stage. Now let us consolidate these bits and pieces into an overall look at the characteristic of a given stage used on various gases at various speeds.

In Fig. 17.11 we plotted the head-flow characteristic for a given conventional stage running at a given speed on various gases. There should be no surprises here because we have discussed all the effects shown. Now if we divide the ordinate H by the speed squared, and the abscissa Q by speed, we have the same qualitative set of characteristics, except that heavy gas becomes high speed and light gas becomes low speed in Fig. 17.12. This figure illustrates departure from the fan law.

17.2.11 Equivalent Tip Speeds

It is possible and quite appropriate to express Figs. 17.11 and 17.12 as a single plot. To do so, it is only necessary to use nomenclature that includes both speed and type of gas. A convenient method of doing this is to multiply tip speed by the ratio of some reference acoustic velocity to actual gas acoustic velocity and call the resulting number *equivalent tip speed* (Fig. 17.13).

The reference acoustic velocity normally used is air at 80°F (27°C), since this is the gas on which components are usually tested. Using the equivalent tip speed concept permits the

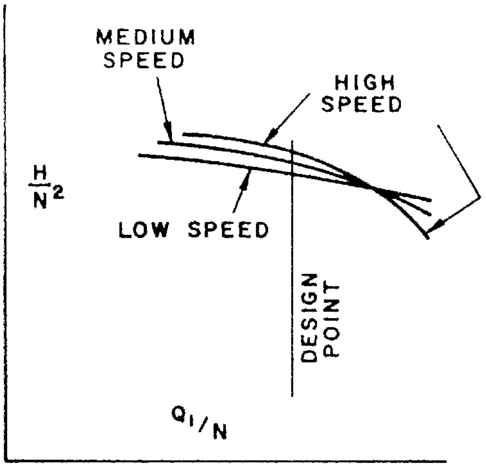

FIGURE 17.12 Speed-based performance curves illustrating departure from the fan laws. (*Elliott Company, Jeannette, Pa.*)

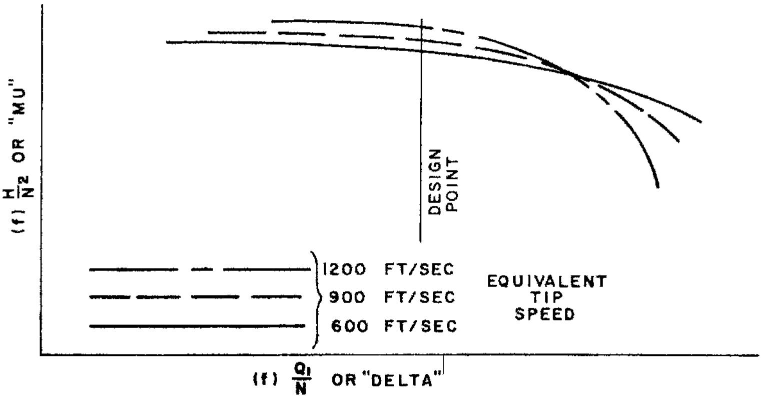

FIGURE 17.13 Plots of head coefficient ("mu") vs. flow coefficient ("delta") allow prediction of stage performance with different gases. (*Elliott Company, Jeannette, Pa.*)

use of a single set of curves to describe the characteristic of a *given* stage when compressing any gas at any speed.

By way of example, we mentioned earlier that the sonic velocity of air at 80°F is 1140 ft/s and that of propylene at −40°F is 740 ft/s. If a stage is running at a tip speed of 780 ft/son propylene, the *equivalent* tip speed is 780 × 1140/740 or 1200 ft/s (366 m/s). The stage characteristic *shape* obtained at 780 ft/s tip speed on propylene is therefore the same as that obtained at 80°F air at 1200 ft/s (366 m/s) tip speed, but the head output of the latter is of course much higher.

The ordinate H/N^2 is commonly adjusted by some constants and called *head coefficient*, or *mu* (μ). The abscissa Q/N is likewise adjusted by constants and called *flow coefficient*, or *delta* (δ). Figure. 17.13 is in actuality, then, the common mu–delta curve used by some compressor investigators to predict stage performance. Others call the head coefficient "phi" (ϕ), and the flow coefficient "psi" (ψ); see Sections 11.5 and 12.9.

17.3 CONCLUSIONS

Let us now review in practical terms just what we have learned. We now know that if conventional machinery is run at the usual tip speeds of 800 to 900 ft/s (244 m/s to 274 m/s) on propylene or heavier gases, the characteristic shape will be quite flat between design and surge, the stable range will be low, and the overload capacity almost nil. We can also see that even between 700 and 750 ft/s (213 m/s and 229 m/s) tip speed—the usual range selected for propylene, propane, and butane—we simply cannot expect the traditional 40 to 50% stable range and generous overload capacity obtainable on air machines. To obtain such a characteristic, it would be necessary to run between 500 and 600 ft/s (152 and 183 m/s), which would almost double the number of stages required for a given amount of compression! The 700 to 750 ft/s range normally used is obviously a compromise between practical economics and desirable characteristic shape and range.

It is hoped that the foregoing has helped in a small degree to close the gap between the specialist and the generalist without too greatly offending the former or too greatly confusing the latter. Compressor performance is a difficult subject at best, and even today new insights are being gained through continuing development programs.

18

USE OF MULTIPLE-INLET COMPRESSORS*

In earlier chapters we provided a thorough introduction to compressor performance prediction. In essence, we dealt with *single-inlet* machines. However, applying, analyzing, designing, and testing *multiple-inlet* compressors may differ substantially from working with typical single-inlet centrifugals. Since multi-inlet, or sideload compressors are quite common in the user industry, we will highlight certain aspects of this type of compressor that are mutually important to the user, contractor, and vendor. Further, an understanding of the sideload compressor is essential to provide a matched compressor and process installation.

18.1 CRITICAL SELECTION CRITERIA

Careful consideration of all operating parameters is required to ensure satisfactory compressor and process fit. Unfortunately, these parameters cannot be considered independently; rather, an overall operating analysis is required. This may result in certain operating parameters (or operating levels) being “desired” rather than being “critical” to successful operation of the overall process.

The common design parameter in API 617, the ASME Code, and other codes may require some modification when applied to the sideload compressor. The usual guarantee of flow, discharge pressure, and consumed horsepower probably will not ensure proper compressor and process match.

---

* Contributed by Kenneth L. Peters (Elliott Company, Jeannette, Pa.), as published in *Hydrocarbon Processing,* May 1981. Adapted by permission of Gulf Publishing Company, Houston, Tex.

A Practical Guide to Compressor Technology, Second Edition, By Heinz P. Bloch

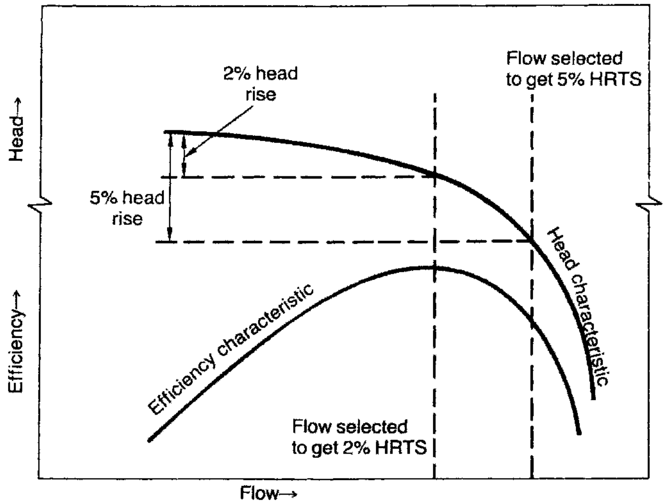

FIGURE 18.1 Effects of 2 and 5% head rise to surge. (*Elliott Company, Jeannette, Pa.*)

Next we point out some parameters that will have a direct effect on compressor selection. This summary is not presented as absolute but rather to demonstrate overall analysis of the specified operating parameters. The discussion includes:

- Head rise to surge, surge margin, overload margin
- Head per compression section
- Compressor parasitic flows (i.e., balance piston leakage)
- Excess margins on other process equipment

18.1.1 Head Rise to Surge, Surge Margin, and Overload Margin

Over the last few years, process engineers have asked for a characteristic curve shape guarantee including *head rise to surge* (HRTS), surge margin, and/or overload margin. Other common terms referring to HRTS include *pressure rise to surge* and *pressure ratio rise to surge*, among others. Depending on other parameters specified, this addition to the guarantee may have no effect or may result in nonoptimum compressor selection. The typical compressor characteristic map shown in Fig. 18.1 illustrates this point. In this example it is evident that a desirable level of 5% head rise to surge will result in nonoptimum efficiency and overload, while a 2% level will give the best efficiency and overload selection.

Another area of interplay on HRTS is with surge margin. The refrigeration process (the widest application of sideload compressors) requires operation at nearly constant discharge pressure (Fig. 18.2). Either driver speed or suction pressure must be reduced as flow moves toward surge. Figure 18.3 shows an actual example where a 15% surge margin was specified with 5% HRTS. Further, the unit had a constant-speed drive with a trip-out if suction pressure dropped below atmospheric pressure. Design suction pressure was 15 psia. With the required 5% HRTS, the unit would trip off stream at 97% design flow. Unfortunately, even 2% would lend the surge margin stipulation immaterial.

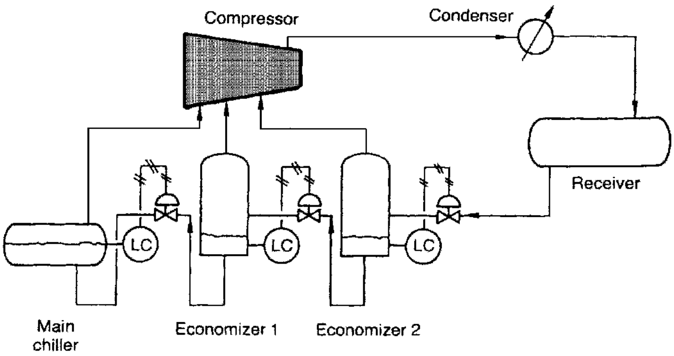

FIGURE 18.2 Simplified multilevel refrigeration process. (*Elliott Company, Jeannette, Pa.*)

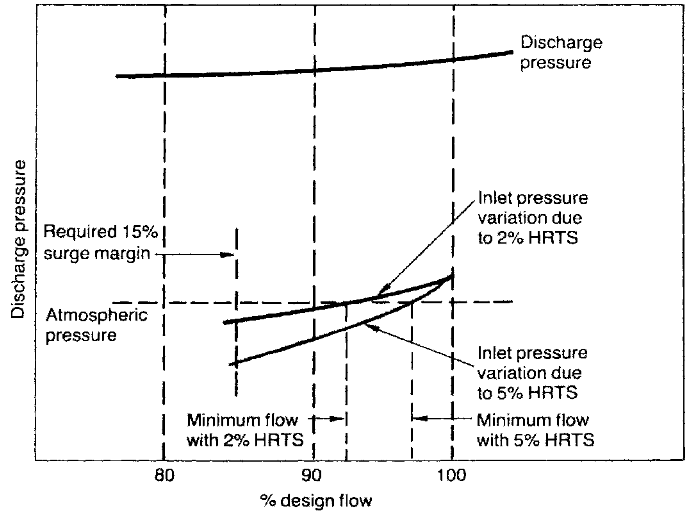

FIGURE 18.3 Effects on pressure for head rise to surge variations (constant-speed drives). (*Elliott Company, Jeannette, Pa.*)

Because of various aerodynamic laws, the surge to stonewall flow range at the conditions of selection for refrigeration service is reduced relative to that seen on various less severe applications. While other applications may have overall flow ranges of 40 to 50%, range on a refrigeration selection is likely to be 20 to 30%. Hence, imposition of an excessive HRTS and/or surge margin criterion may result in only minimal overload capacity, as indicated in Fig. 18.2. Conversely, an excessive overload margin stipulation may result in too low a HRTS or surge margin for safe, reliable, efficient operation.

18.1.2 Head per Section

Another important operating parameter that must be evaluated is the required head per section split on the compressor. Requests for smallest possible bearing spans may create or aggravate various aerodynamic considerations. The fewer impellers per section, the higher the head required per compressor stage. Higher head per stage requires increased rotative speed, resulting in operation at higher Mach numbers. Operation at higher Mach numbers tends to restrict the operating range, flattens the head rise characteristics, and reduces efficiency.

Operation at lower Mach levels is achieved by increasing the compressor stages per section and lowering rotative speed. Rotor dynamics criteria and hardware costs limit this approach. Although there is an optimum sidestream pressure level, as defined by the cycle, the pressure level may require only slight adjustment to allow better compressor selection.

18.1.3 Compressor Parasitic Flows

Reentry of seal equalizing line flow into the main gas stream can also influence compressor selection. If these flows are significant, reentry at a point other than the main inlet may be advantageous so that the sensitivity or tolerance effect on the operating range and efficiency may be reduced. If this option is taken, the manufacturer must take care that its effect on other aspects of the overall mechanical compressor design has been adequately considered. This effect can best be seen by reviewing Fig. 18.4.

One can see that for the same flow entering the main compressor inlet flange, the true operating point on the section characteristic may be significantly different. This problem is readily alleviated by, for instance, putting the parasitic flow into the first sideload. If the parasitic flow is, say, 5% of the first section, it may only be 1 to 2% of the overall flow (also consumed horsepower) entering the first wheel of the next section downstream of the sideload. Hence, variations due to balance piston seal leakage are negligible.

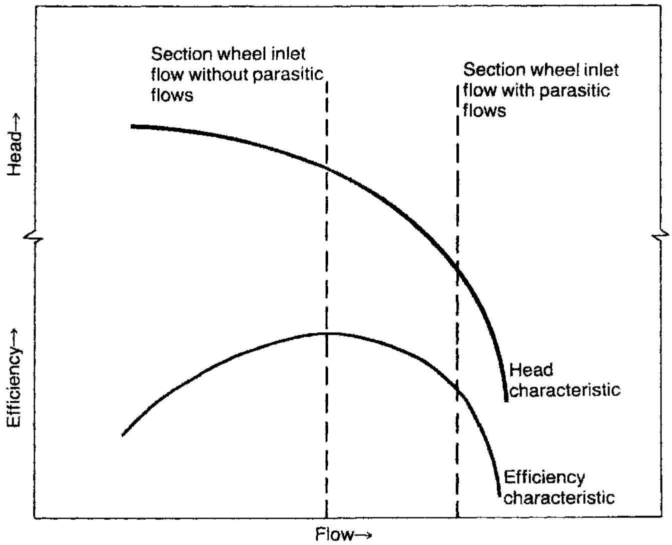

FIGURE 18.4 Possible performance shift due to parasitic flows in a multistage compressor. (*Elliott Company, Jeannette, Pa.*)

18.1.4 Excess Margins on Other Process Equipment

Design of excess margin into the various process components is also a very important consideration. For example, assume that the process designer allows 5% excess in his specification to the contractor, the contractor takes in an additional 5%, and the compressor vendor elects to add 2% in flow. The process design flow now is approximately 88% of the compressor design flow. Operation at the process design flow may greatly reduce the stability margin of the compressor and, in turn, the overall cycle.

Additionally, consider the situation where a constant-speed driver is used. The unit may be operating below atmospheric pressure at the inlet as a result of the margins used in specification of the machine. (This is similar to the situation shown in Fig. 18.3.) A cumulative accounting of all excess margins will aid in realizing successful compressor selection.

18.1.5 Representing Compressor Performance

In the past, typical performance for sideload units has been judged on a set of individual sectional curves based on constant inlet conditions to each section. These curves, however, have no direct relation to the way the unit will operate with a process.

Compressor performance should be presented as individual sectional curves in conjunction with a graph of expected performance based on the type of operation expected in the field. This *constant turndown map* can easily be generated from the individual sectional curves after making assumptions on mode of control, temperature, and other operating conditions.

This map is generated as follows from the sectional curves. Discharge or condenser pressure is assumed constant at design value. The sectional curves then are used to determine exact sideload pressures as a function of mass flow to each section. Normally, a constant turndown in mass flows is assumed. The net result is a characteristic curve for the compressor showing each sideload pressure (and inlet pressure) as a function of mass flow. Speed or inlet pressure (constant-speed units) are varied to meet design discharge pressure requirements. This provides a curve of the actual mode of operation of the unit.

Part load and overload operation data, at least initially, are generated by reducing or increasing all incoming mass flows by the same percentage. Also, initially, design temperatures are assumed constant. A minor modification can account for temperature variations at each inlet due to the flow or pressure change. Figures 18.5 and 18.6 are presented to show constant- and variable-speed applications, respectively.

If generated with input from the customer, a turndown map can be used directly in a simulation. A good simulation analysis provides a much better evaluation of how a unit would operate in the field than sectional curves alone. Review of the turndown map will be a great aid in analyzing interplay of requested levels of operating parameters. Two important items observed directly from the map are pressure levels over the expected operation range of the system and potential stability of the variable-speed driver.

18.1.6 Practical Levels of Critical Operating Parameters

Because no code exists to establish recommended design parameters and limits for sideload units, the following list is recommended as a basis from which pertinent discussions can develop.

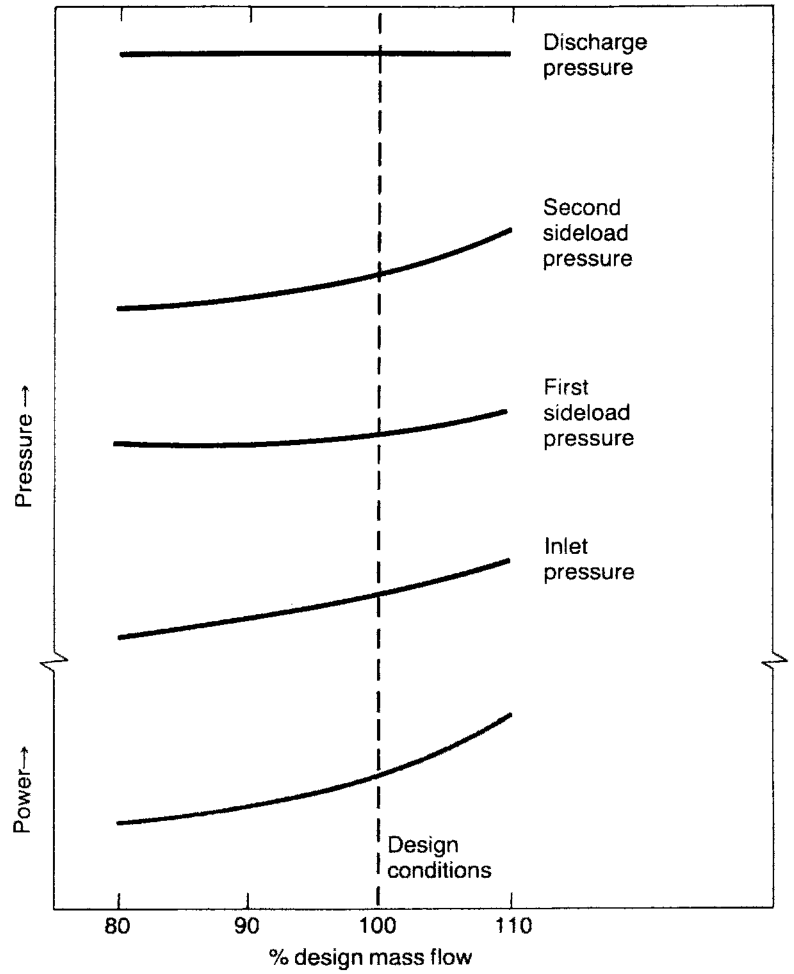

FIGURE 18.5 Typical turndown map with a constant-speed driver. (*Elliott Company, Jeannette, Pa.*)

- *Overall unit horsepower.* This parameter can be made in accordance with the code as ±4%, but because of limitations on test instrumentation and calculations, some assumptions may need to be included in the calculations.
- *Sectional head rise.* This particular parameter should be set as low as possible for both constant- and variable-speed applications. Based on experience, a number as low as 2 to 3% overall can be adequate in most applications, assuming that integration of the controls has been done properly.
- *Overload and stability margins.* These quantities are interrelated and collectively should be about 20 to 30% of the design flow value. Minimum margins should be 15% for surge and 5% for overload, or 20% combined range.
- *Sideload pressure level.* This particular parameter is usually the most unstated requirement on the sideload compressor. A reasonable tolerance is ±2% on the section head. Individual process designs may require that these be altered.

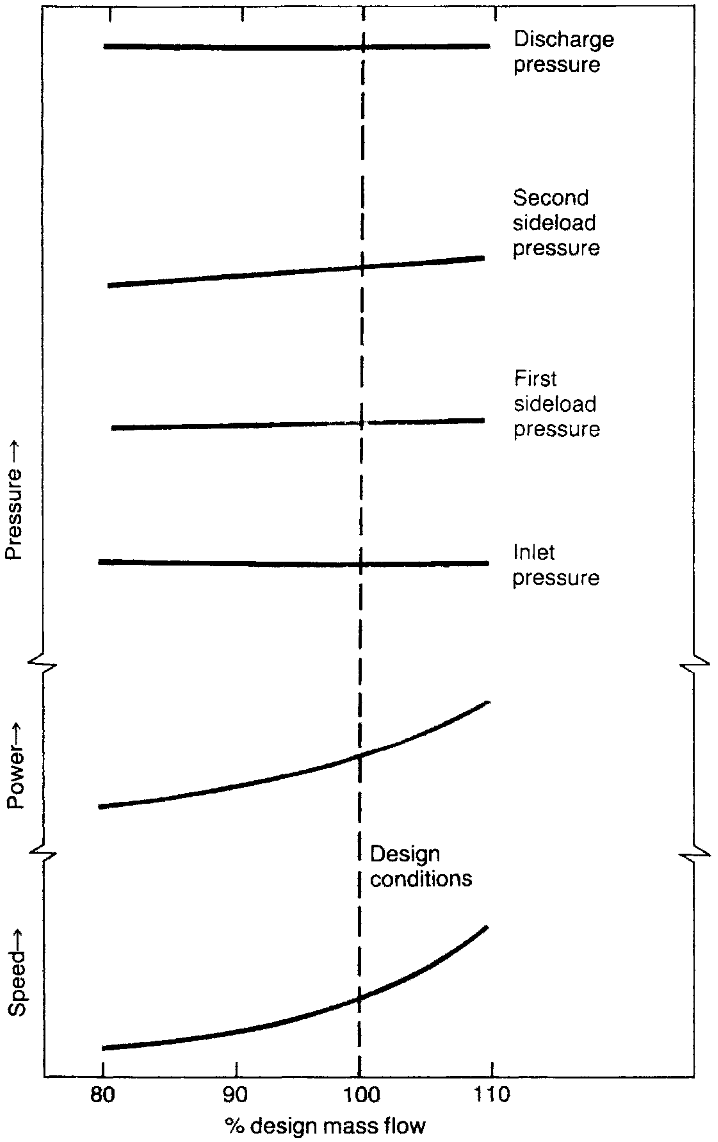

FIGURE 18.6 Typical turndown map with a variable-speed driver. (*Elliott Company, Jeannette, Pa.*)

- Other desired tolerances or requirements need to be reviewed during the application phase of the compressor so that all parties realize their implications.

18.2 DESIGN OF A SIDELOAD COMPRESSOR

Design of each sideload compressor application is dependent on the required parameters discussed previously. However, there are several design areas of a general nature that need to be highlighted.

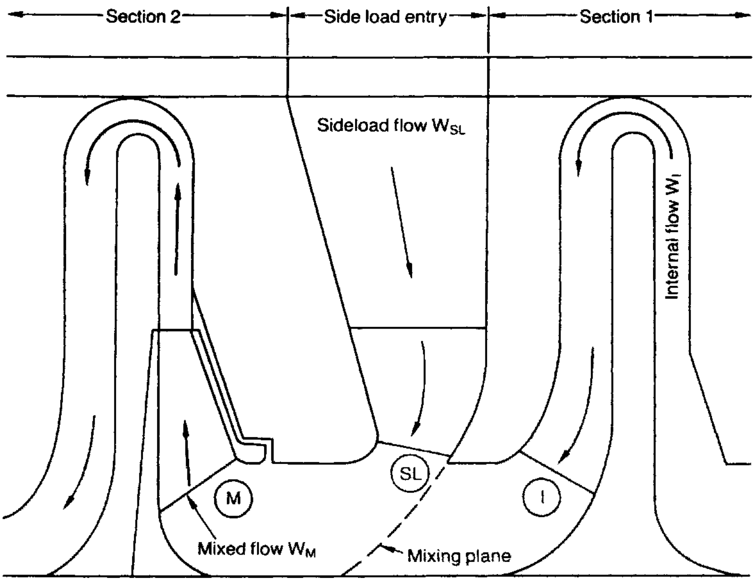

FIGURE 18.7 Cross section of sideload into the main gas stream. (*Elliott Company, Jeannette, Pa.*)

18.2.1 Mixing Area

One of the more complex design areas is in adequate calculation and physical occurrence of the mixing of two streams internally in the compressor. An analysis using conservation of mass, momentum, and energy provides the calculated properties of state following the interaction of the two streams. Any loss due to the mixing process is assumed to be a function of the amount of momentum lost by the main gas stream during the interaction. Also, the mixing process is assumed to occur at a constant static pressure (Fig. 18.7). That is, flowing conditions at station M are obtained by combining conditions of the main and sidestreams at stations I and SL, using conservation of mass, momentum, and energy. This analysis is a function of momentum. Thus, velocities of the two streams at the point of mixing are critical. Close attention to the area ratio of both incoming streams is a must for optimum mixing.

A direct result of improper area control in the mixing chamber is that it may create different operating characteristics, depending on location of the measuring equipment. With the static pressures of both streams equal at mixing, the velocities determine the total pressure of each stream. It is possible that total pressure calculated at station I will be higher than total pressure calculated at the sidestream flange. Hence, if process pressure controls are connected at the compressor flanges, it is possible that the compressor will not be monitored accurately. Figure 18.8 depicts this problem graphically.

In Fig. 18.8, internal performance is measured from the mixing plane to the exit of the section (station I in Fig. 18.7). External flange-to-flange performance is measured at the respective compressor flanges. To match internal performance with external performance, control of the mixing areas is a must.

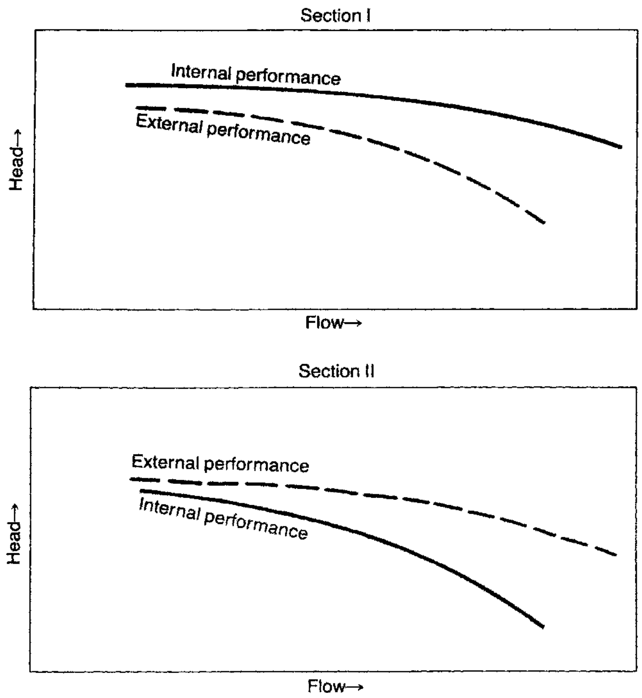

FIGURE 18.8 Possible effects of improper mixing area control as a function of measurement location. (*Elliott Company, Jeannette, Pa.*)

18.2.2 Aerodynamics

Sideload compressor applications are normally used in refrigeration systems that combine high molecular weight and low temperatures. This results in operation at higher Mach numbers. From the equation

$$a_s = \sqrt{kgRT_s} \tag{18.1}$$

where a_s = sonic velocity
k = ratio of specific heats
g = gravitational constant
R = universal gas constant
T_s = static temperature, °R

As molecular weight goes up and T_s decreases, sonic velocity is reduced. Hence, for the same relative velocity of the flowing gas, the relative inlet Mach number is higher than that for, say, air at standard conditions flowing at the same rate.

Notice that relative inlet Mach number is used, not simply Mach number. Care must be taken when reviewing Mach numbers that all values are based on the correct gas velocity. Very simply, the two Mach numbers usually referenced are *inlet Mach number* and *relative inlet Mach number*. Inlet Mach number is typically calculated as the Mach number as flow enters the impeller, measured either at the impeller eye or at the leading edge of the blade passage (Fig. 18.9).

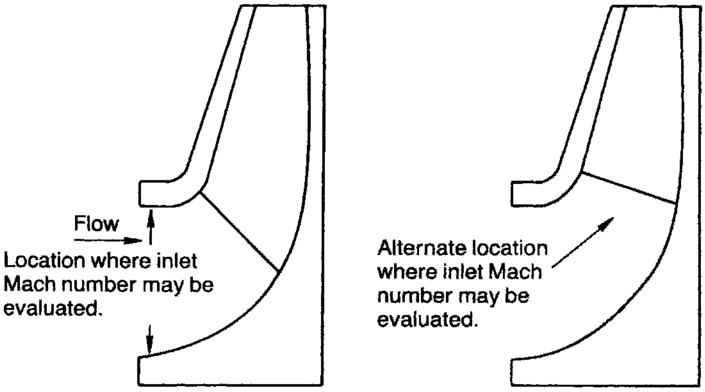

FIGURE 18.9 Locations sometimes used to measure the inlet Mach number. (*Elliott Company, Jeannette, Pa.*)

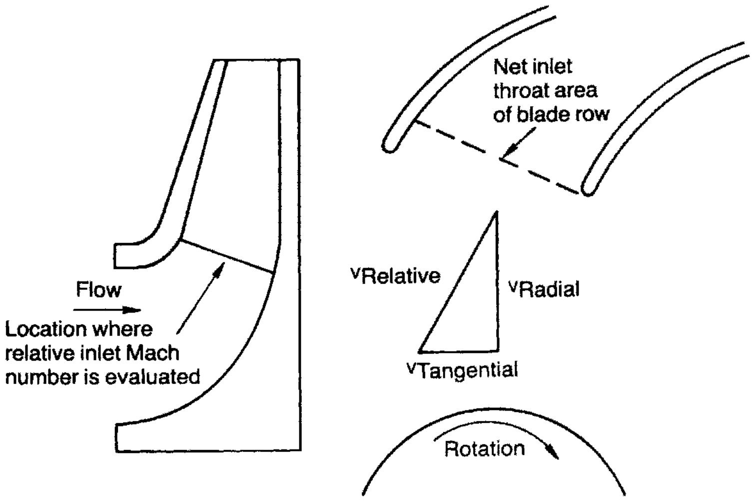

FIGURE 18.10 Impeller geometry for determining the relative inlet Mach number. (*Elliott Company, Jeannette, Pa.*)

In either location the area is unobstructed. Velocity is typically derived by dividing the inlet flow rate by the area, without considering the rotating disk or blade blockage. Conversely, relative inlet Mach number denotes the Mach number of the flow stream perpendicular to the throat section of the impeller (Fig. 18.10). Needless to say, relative inlet Mach numbers are higher than inlet Mach numbers because net throat area is less than the area of the impeller eye or at the leading edge of the blade passage.

Proper application and basic knowledge of proven aerodynamic hardware have permitted successful operation of stages at relative inlet Mach numbers in the area of 0.95 and above. As operating Mach numbers increase, the stable operating flow range decreases and the compressor characteristic curve flattens (Fig. 18.11). *Flattening* is the result of stage component efficiency curves displaying a sharper peak, with the peak moving toward higher flow

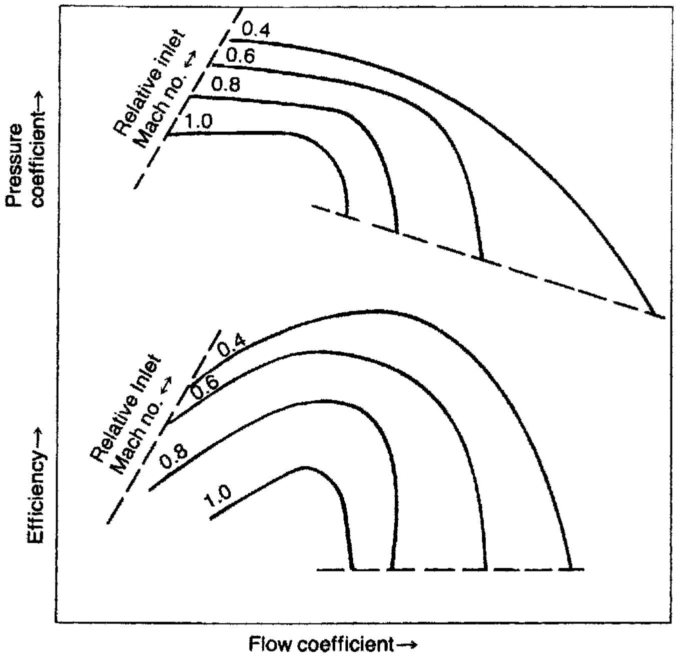

FIGURE 18.11 Effects of the relative inlet Mach number. (*Elliott Company, Jeannette, Pa.*)

coefficients with increased Mach numbers. The result is that head capability at part load is reduced relative to design, and the curve displays a lower slope.

With increasing Mach number, the maximum overload (choke or stonewall) flow coefficient moves steadily toward the design value. Similarly, on the low-flow end, the surge flow coefficient moves toward the design value. Very simply, the higher the Mach number, the smaller the stable operating flow range.

18.2.3 Temperature Stratification

An area of concern is temperature stratification, both radial and circumferential. A good inlet and mixing area design will help minimize circumferential stratification, however, radial stratification will exist to some extent.

18.3 TESTING

The acceptance performance test serves as a confirmation of all of the care taken in the application, design, and manufacture of the sideload unit. The ideal method needed to ensure this confirmation is to perform a controlled ASME-type test in actual service. However, for a number of reasons this is usually impractical. Thus, a modified ASME equivalent performance test may be completed in the compressor vendor's shop prior to shipment.

The ASME equivalent performance test for sideload units per se is not clearly defined. In the absence of concise procedures, each section is generally regarded as an individual

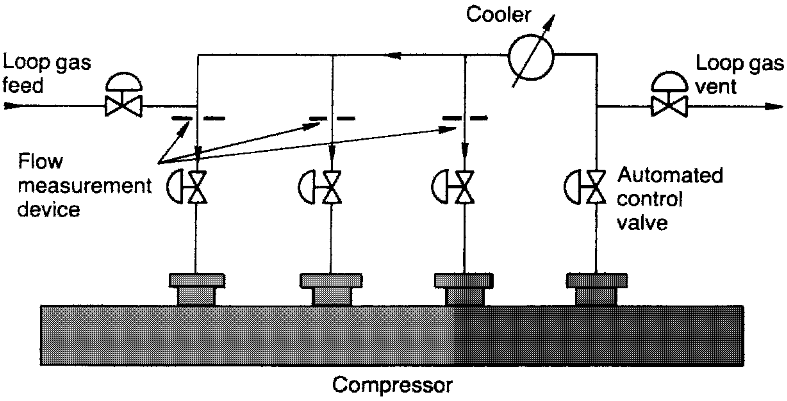

FIGURE 18.12 Typical test loop. (*Elliott Company, Jeannette, Pa.*)

compressor and tested accordingly with the code applied as nearly as possible. However, some general guidelines should be highlighted to help clarify testing procedures.

18.3.1 Test Setup

In actual service each sidestream typically originates at a distinctly different physical location, giving individual properties of state at each entry. To duplicate this condition in the vendor's shop would be extremely costly. In lieu of this, a simplified typical setup for a two-sideload compressor is shown in Fig. 18.12.

Variations to the setup exist, but the basic closed-loop concept is used throughout the industry, with control valves used to control pressures at the various inlets. Under normal conditions a bleed-feed system must be used to maintain loop test gas purity and pressure control. This system, or ones like it, have proven adequate over the past decades.

18.3.2 Instrumentation

Crucial to validity of a shop sideload performance test is the required instrumentation and its proper installation. The following general guidelines on instrumentation have been proven over the past several years and are recommended for general acceptance.

The ASME code provides guidelines for instrumenting the external flanges of the compressor and the flow-measuring sections. This instrumentation will provide adequate readings at the compressor flanges and flow-measuring devices but will not suffice to obtain information on sectional performance or overall unit horsepower consumption. Actual performance depends on the properties of state of gas exiting each section and thus is not directly available from flange readings alone. Internal instrumentation is required, or assumptions must be made on temperature rise across each section. As methods of instrumenting sideload compressors improve, this guide may change.

18.3.3 Testing Procedure

First, as nearly as possible, sidestream and main inlet flows should be held proportionately equal throughout the test and as close as possible to those anticipated in actual service.

Failure to follow this approach may result in conflicting data. Because of varying splits between the sidestream and main gas stream, it is possible to achieve two different levels of performance for the same sectional inlet flow.

Just as important as the testing method is stabilization of individual testing points. Before data are taken time is required at each testing point to permit all system components to become normalized because of heat transfer and other transients. Given constant inlet conditions, stabilization can be assumed when three consecutive readings of discharge pressures and temperatures taken at 3-minute intervals conform within 2%. A good practice to verify stabilization of the first point after each startup of the test is by repeating it after a minimum 5-minute interval. Subsequent readings can be taken when stabilization has been verified.

Because stabilization is a function of mass flow rate, equipment size, total heat capacity of the metal, curve shape, internal leakages, test loop configuration, and heat transfer, it cannot be assumed simply to be based on time. Properties of state of the flowing medium must be satisfied as constants.

18.3.4 Accuracy of Test Results

One question remains on testing: How accurate are the test results? Testing of the entire unit at one speed may not give absolute results because of slight compromises required by code guidelines on volume ratio, Mach number, and Reynolds number. Some believe that testing each section at a given speed or testing partially stacked rotors is a solution. Results of such testing, however, have not shown a sufficiently higher degree of accuracy to warrant the added expense and time.

18.3.5 Evaluation of Results

Individual sectional curves do not depict a reasonable evaluation of the units performance during selection. Similarly, test results cannot be evaluated as individual sections. The sectional curves must be converted to a turndown map before any rational conclusion about overall unit acceptability may be discussed. The turndown map must be used to evaluate results of the sideload test.

Testing a sideload compressor is indeed complicated and involved and requires more expertise than the typical equivalent performance test. Testing requires a total understanding between the witness and the vendor.

The application, design, testing, and analysis of a sideload compressor all differ substantially from a typical centrifugal compressor. Failure to seriously consider the uniqueness and complexity of unit and process interaction—all the way from initial process design through to the actual field installation—may result in an unfavorable installation.

In any event, the topic merits close consideration as is dealt with in Chapter 19.

19

COMPRESSOR PERFORMANCE TESTING*

There are many instances when compressor performance must be determined or verified. The fulfillment of contractual obligations may have to be ascertained, or field performance evaluations may be needed, for reasons such as pinpointing the causes of performance degradation. Accordingly, this chapter offers guidelines for performance testing of dynamic compressors. Three case histories, as well as relevant procedures, equations, and sample calculations are included. Also, the first three segments of this chapter convey the (relative) complexity of rigorous performance testing and demonstrate at least one available computer tool. This material is supplemented in Section 19.4 by shortcut methods of predicting compressor performance under "new" conditions those that differ from conditions originally specified and designed.

19.1 PERFORMANCE TESTING OF NEW COMPRESSORS

Completing a performance test on a new purchase is the only way that purchasers can be sure that they getting what they paid for and that the compressors will do the job as specified. For new equipment, a shop test at the factory is most appropriate. Although field testing of new machines is, of course, feasible, the compressor is now far from the factory and out of the hands of the original equipment manufacturer (OEM). Any problems will be the purchaser's to settle. With test equipment not accurately calibrated and the location of test instruments rarely in harmony with the applicable testing code [generally, the widely used ASME Power Test Code 10 (PTC 10)], there can be arguments over the accuracy of field tests. The reliability professional is expected to get the plant running, not resolve compressor problems.

---

* Sections 19.1 through 19.3 were contributed by M. T. Gresh, Flexware, Inc., Grapeville, PA.

A Practical Guide to Compressor Technology, Second Edition, By Heinz P. Bloch

That said, it might be best to keep the machine at the factory until the owner/purchaser can be certain that he or she is getting the results desired.

19.1.1 Re-rate Options

Re-rating a centrifugal compressor refers to modification of compressor internals so as to achieve a performance different from that for which the machine was originally designed or purchased. For re-rates (see also Section 19.4), the issue of testing is entirely different from that of new machines. Here, a user/owner generally buys "bits and pieces," which differ from case to case. Parts to be changed may include impellers, stationary gas passage components, shaft, seals, bearings, and sometimes even couplings. The machine is opened during an extended turnaround and the new parts are installed. There is rarely an opportunity to ship the machine to the manufacturer for this refurbishing; hence, it will not be possible to test the machine in the factory under controlled PTC 10 conditions. However, a field acceptance test can be done with reasonable accuracy. Compromises will be necessary to accommodate field conditions, but a good test is feasible as long as some special considerations are observed.

The scheduling of maintenance outages and preventive maintenance based on field performance testing is a relatively new practice. Many users are doing continuous on-line monitoring to track compressor performance for various reasons. Not only can field performance analysis be helpful for predicting when maintenance is needed, but certainly, knowing where the compressor is operating on the curve can be beneficial in preventing failures. It stands to reason that knowing compressor performance details is the first step in considering a re-rate. Moreover, online monitoring can help operators optimize throughput or plant production by giving them instant feedback. Having retained or obtained a good compressor performance history can be a powerful aid to resolving compressor problems.

19.1.2 General Guidelines

A number of general guidelines are worth listing.

- All performance testing should be in accordance with ASME PTC 10. Although shop tests must be in strict adherence with this procedure, following it to the letter is generally possible only at the manufacturer's shop; it certainly is not practical for field testing. Even so, it is recommended that PTC 10 be followed as closely as practical to assure accurate results.
- Compressor shaft horsepower is determined by adding the enthalpy rise gas horsepower to standard values of bearing and seal mechanical power losses.
- Mass flow is determined by using the system flowmeter. Mass flow is checked by direct calculation from flowmeter upstream conditions and differential pressure using applicable ASME flow code equations.
- Test points should not be taken until such time as compressor operation is shown to be in equilibrium. *Equilibrium* is defined as the condition in which the discharge temperature does not vary more than 1°F over a 5-minute period at constant inlet conditions.
- Upon achieving equilibrium, three complete scans of data readings per data point are taken over a 20- to 30-minute period and averaged for calculations.
- It is recommended that a minimum of five data points be taken to establish the performance curve shape. Take one point at the design or normal operating point at 95% of this value, 105%, 110%, and 90%. Also, confirm the surge and choke points.

- A gas sample (or purity check) should be completed at the beginning and end of the test points. Take precautions to avoid condensation in the sample bottle. However, it is wise to sample at both suction and discharge. The method of gas analysis recommended is gas chromatography.
- Test accuracy should be checked by comparing test work input to predicted work input. Also, complete a power balance on the equipment string if at all possible. Measured driver-delivered power minus gear (if applicable) power losses can be compared to calculated compressor-absorbed power. The overall accuracy of the test is no better than the power balance.
- The liquid wash injection system, if provided, should be shut down 30 minutes prior to each test data scan. This is required to exclude any quenching effect on the gas and its discharge temperature.

19.1.3 Gas Sampling

Be sure to follow proper precautions when taking a gas sample.

- A stainless steel sampling cylinder should be used. It should be at least 300 mL in size and have straight cylinder valves on both ends. The pressure rating of the cylinder should be high enough so that it can withstand full system pressure. Be sure to check the containers for leaks before using. Helium is a good medium for this leak check.
- Take a gas sample from each compressor nozzle (inlet and discharge for each section) before and after taking compressor data (flow rate, speed, and nozzle pressures and temperatures). Condensate can form on the gas sample container (gas bomb) walls and give erroneous results unless the container is heated. The empty gas bomb should be heated to the temperature of the gas being sampled or higher during the sampling process. Purge the container with the process gas thoroughly before closing the valves and trapping the gas at process pressure.
- The containers are then transported to the laboratory. To minimize the effects of any undetected leaks, it is best not to delay and process the sample as soon as possible. During the transportation the samples cool and therefore drop in pressure. The cooling of the sample may result in condensation of some of the gas. This condensation must be gasified before feeding into the gas chromatograph. The only sure way to do this is to reheat the gas sample to the sampling temperature. At this point it may be wise to then bleed off some of the pressure before feeding the gas chromatograph. This brings you further away from the dew point and provides further assurance of avoiding condensation.
- Be sure that you confirm values by comparing the discharge gas analysis to the inlet gas analysis for the same section. The accuracy of your test results is no better than the agreement between your gas analysis results.
- A cross-check on accuracy can be made by checking the weight of a separate sample. This sample container should be at vacuum and heated before filling with the process gas. Weigh the sample container evacuated and also with the sample. Knowing both weight and volume will give you the specific volume. Check this against the specific volume calculated for the temperature and pressure of the sample point using the composition given by the gas chromatograph.

19.1.4 Instrumentation

General instrumentation requirements for test are detailed in Fig. 19.1. ASME PTC 10-1997 requires four probes in each location. For a shop test, this cannot be compromised. However for a field test, typical instrumentation consists of a single element in each location. If a field acceptance test is being conducted, dual elements at 90° are suggested to offer some redundancy and to check for flow swirl.

- For each section, upstream pressure, upstream temperature, and pressure differential measurements are required at each flowmeter.
- All pressures at the compressor flanges and the primary flowmeter are measured using instruments having a minimum sensitivity of $\frac{1}{4}$% and a maximum error of $\frac{1}{2}$% full scale.
- All pressure-measuring instruments are selected to operate at midscale or greater at the test values expected. Mount the instruments on a vibration-free local panel, connected to the process sensing point using instrument pressure lines at least $\frac{1}{4}$ in. in diameter. The instrument lines should slope continuously down toward the process sensing point to eliminate the possibility of condensation filling the line. Install block and vent valves at each instrument to facilitate in-place calibration. Calibration using a certified and traceable device is preferred.

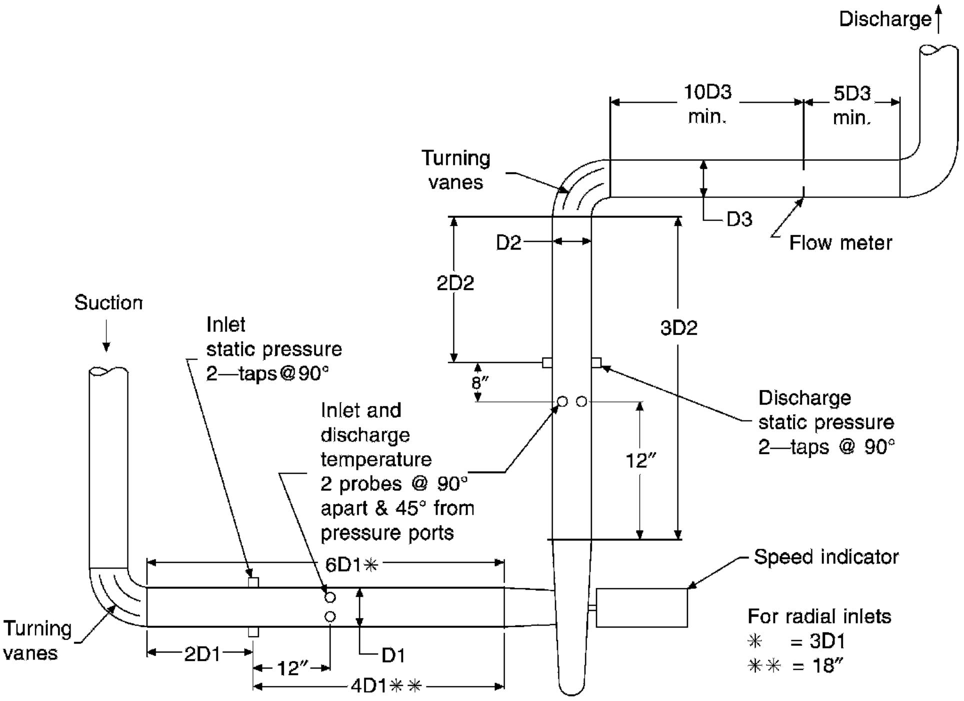

FIGURE 19.1 Typical instrumentation suggested for a field acceptance test. PTC 10-1997 requires four probes in each location, whereas most field installations have only one. Although a single instrument per location is OK for routine monitoring, it is important to confirm the accuracy of the instruments as well as the overall test results. If a field acceptance test is being conducted, dual elements at 90° are suggested to offer some redundancy and to check for flow swirl. (From Ref. 1.)

- The preferred static pressure connection at the process piping must have a pressure tap hole no greater than 0.5 in. in diameter, deburred, and smooth on its inside edge.
- On horizontal runs of pipe, pressure taps should be in the upper half of the pipe only.
- Temperatures should be measured using a thermocouple or RTD system having a minimum sensitivity of $\frac{1}{2}$°F and an accuracy within 1°F. If a thermocouple system is used, care should be taken to avoid intermediate junctions at terminal or switch boxes.
- The temperature-sensing portion of the probe must be immersed into the flow one-third to one-half of the pipe diameter.
- The temperature-sensing element should be in intimate thermal contact if using wells. A suitable heat transfer filling media, such as graphite paste, should be used. Stem conduction errors can be minimized by wrapping the stem and well with fiberglass or rockwool insulation.
- Speed should be determined utilizing two independent systems, one being a Keyphasor on the shaft with a digital readout having ¼% full-scale accuracy.
- Compressor flow for each section at each test point should be determined by direct computation of mass flow rates through the flowmeter using the measured values for upstream pressure, upstream temperature, and meter differential pressure. Thermodynamic properties for the process gas will be based on the gas samples taken for the particular section and test point.
- In general, all instruments used for the measurement of temperature, pressure, and speed should be calibrated prior to test. The calibration of all instruments will be subject to witness and approval by all parties prior to starting the test. Hard copy records of all instrument calibrations must be prepared and will become part of the formal test record. Instruments that malfunction during the test will be replaced with instruments having current calibration. All instruments will be subject to a posttest calibration check at the discretion of either party.
- Pressure instruments are best calibrated by comparison to a certified standard throughout the instrument scale or range. The calibration should be conducted for both increasing and decreasing signals to determine hysteresis. The calibration record should state both actual standard value and indicated instrument value. Instruments that do not demonstrate an accuracy of $\frac{1}{2}$% full scale are not to be used.
- Calibration of temperature-measuring systems should include all components of the system including probe, lead wire, reference junction (if applicable), and readout. Each temperature-measuring system should be calibrated by subjecting it and a certified reference standard concurrently to varying temperatures in a thermostatically controlled oven or oil or sand bath.

Calibrations are to be conducted on both increasing and decreasing signals over the expected operating range for test. The calibration record should state both actual standard value and indicated instrument system value. Temperature systems that do not demonstrate agreement within 1% of the reference standard throughout the calibration range should not be used.

- The orifice meters are pulled. The actual flow-metering element to be used must be checked dimensionally prior to test. Records of the dimensional check are to be made and compared to design standards. The dimensional record is subject to approval by all parties prior to starting the test. Make sure that the sharp edge is still sharp and clean. Clean and/or replace as necessary. Orifice plates must be replaced if there is any evidence of wear.

- Readouts used to measure compressor speed should be checked by input of a signal from a certified frequency-generating device. Readouts that do not demonstrate a minimum accuracy of $\frac{1}{4}\%$ of full scale are not to be used.
- Blow down all instrument lines to assure that there is no liquid or other blockage in the lines.

19.1.5 Sideload Compressors

As the term implies, sideload compressors are machines where a portion of the gas flow enters somewhere after the first impeller or first stage of compression. The preferred instrument locations for sideload compressors are shown in Fig. 19.2. Sideload and extraction lines, if applicable, are to be treated as inlet and discharge lines, respectively. If existing instrument tapping points must be used, care must be taken that those used are reasonably close to the compressor flanges. There must be no valves, strainers, silencers, or other sources of significant pressure drop between the pressure tap points and the compressor flange.

Evaluation of sideload and extraction compressor performance requires internal pressure and temperature probes at the sideload and/or extraction. Although this is nearly impossible for a field evaluation test, it is typically done for shop testing. For field tests, special data reduction techniques can be used where internal pressures can be estimated

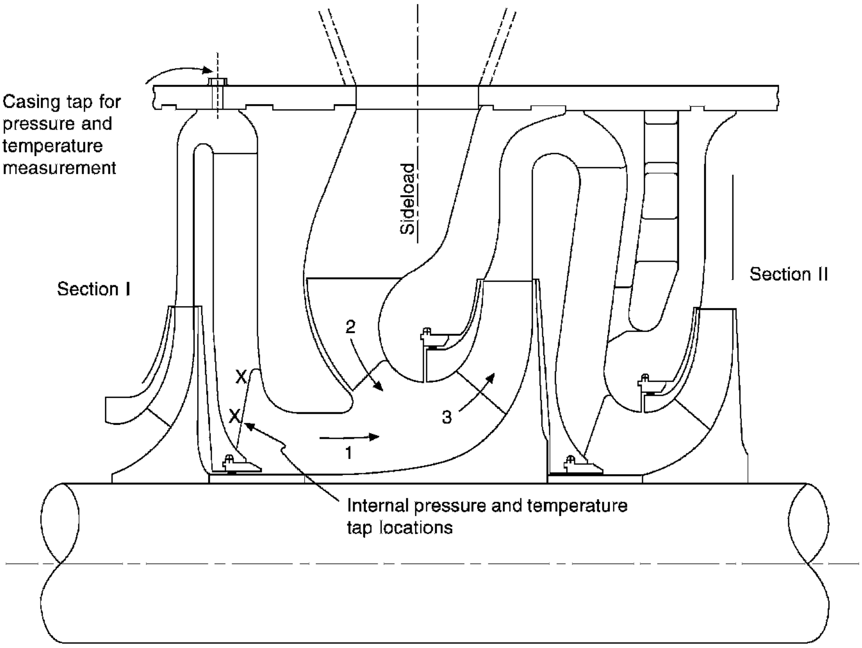

FIGURE 19.2 Pressure and temperature taps for sideload compressors. Although internal measurements are not practical for field installations, the casing tap may be considered. Be sure that the thermal element is installed deep enough that it will not be affected by heat transfer to the casing. (From Ref. 1.)

from flange pressures, gas velocity through the compressor nozzle, and standard pressure drop loss coefficients for a given sideload or extraction nozzle design.

Internal gas temperature at the discharge of each section is also required to determine sectional performance. This can be accomplished through an iterative process which makes use of predicted work input curves for each section. The procedure begins for a given test point by establishing the inlet volume flow for section 1. From the work curves predicted, the estimated work input is obtained. These data, along with the internal pressure determined above, are used to establish the estimated discharge temperature for section 1. A BWR (Benedict–Webb–Rubin) gas properties program such as Gas Flex is best used for this procedure. The sideload flow is then mixed with the discharge flow calculated from section 1 to establish the inlet flow to section 2. This procedure is then repeated for each following compressor section using its respective work input curve. The test on the validity of the work input curves is made by comparing the calculated final discharge temperature to the measured discharge temperature. If these two temperatures agree, the assumption is made that the correct work input has been used. If, however, the two temperatures do not duplicate one another, the work input curves for each section are varied and the process repeated.

Once pressure and temperatures are known at the discharge of section 1, a mixing calculation is required to establish suction conditions for the next section (see Fig. 19.2).

$$P_1 = P_2 = P_3 \tag{19.1}$$

where the subscript 1 represents the discharge of section 1; 2, sideload condition, and, 3, the mixed suction to section 2.

$$\dot{M}_1 h_1 + \dot{M}_2 h_2 = \dot{M}_3 h_3 \tag{19.2}$$

where $\dot{M}_1 + \dot{M}_2 = \dot{M}_3$. T_3 is then found by working back through the gas properties or Mollier diagram knowing h_3 and P_3. T_3 may be approximated very accurately by

$$T_3 = \frac{\dot{M}_1 T_1 + \dot{M}_2 T_2}{\dot{M}_1 + \dot{M}_2} \tag{19.3}$$

Test Evaluation The objective of an acceptance test is to confirm that the compressor will provide the performance predicted for the "design" condition. In addition to proving the originally "as sold" design performance, field testing is useful for determining maintenance schedules and possible modifications as requirements change over time.

For an evaluation test, the compressor is to be operated at a speed to obtain the specified overall head for the compressor string (first main inlet to final discharge), and the process (or test loop) set to obtain the design inlet volume flow at design temperature, pressure, and MW at each compressor section inlet nozzle. All data must be collected via electronic "snapshots" for best accuracy to eliminate the effect of any minor variations in operating conditions and reading errors.

Once data at the design point are collected, the flow is to be increased to choke flow. The flow can then be reduced by a restriction on the discharge of the compressor until surge is detected. Data are collected at a location at the choke point near the surge point in a stable situation at design speed and several points in between (no less than five points total). It should be noted that interaction between sections on a sideload might make this impossible to complete properly for each section in a field test situation.

19.1.6 Calculation Procedures

In general, data reduction will employ the equations shown below. Performance parameters (head, efficiency, and inlet volume flow) must be calculated using Benedict–Webb–Rubin (BWR) equations of state based on the results of the on-site gas analysis. Performance parameters are calculated for each section of compression and/or an overall value based on flange data and internal data.

Polytropic Head

$$H_P = (h_2 - h_1) - \frac{(s_2 - s_1)(T_2 - T_1)}{\ln(T_2/T_1)} \tag{19.4}$$

The polytropic efficiency is given by

$$\eta = \frac{H}{778.16(h_2 - h_1)} \tag{19.5}$$

For sideload compressors,

$$\eta = \frac{H_{1-2}M_1 + H_{\mathrm{SL}1-2}M_{\mathrm{SL}1} + H_{\mathrm{SL}2-2}M_{\mathrm{SL}2}}{778.16[(h_2 - h_1)M_1 + (h_2 - h_{\mathrm{SL}1})M_{\mathrm{SL}1} + (h_2 - h_{\mathrm{SL}2})M_{\mathrm{SL}2}]} \tag{19.6}$$

Flow Measurement Basic flow measurement equations are as follows [2]. For square-edged orifices,

$$M = (5.983)K_4d^2(Fa)Y\sqrt{\frac{h_w}{v_1}} \tag{19.7}$$

where v_1 is the specific volume of fluid at inlet to orifice in cubic feet per pound. Gas horsepower is given by

$$ghp = 0.0236(h_2 - h_1)M \tag{19.8}$$

or, for sideload compressors,

$$ghp = 0.0236[M_1(h_2 - h_1) + M_{\mathrm{SL}1}(h_2 - h_{\mathrm{SL}1}) + M_{\mathrm{SL}2}(h_2 - h_{\mathrm{SL}2})] \tag{19.9}$$

Pressure Loss The following equation [3] will be used to determine the pressure drop between the compressor flange and the actual measurement point. This pressure drop will then be added (or subtracted) to the measured value to obtain the value at the flange:

$$\Delta P = 3.62 \frac{K_3 q^2}{v d^4} \tag{19.10}$$

Nomenclature

d = pipe diameter, in. (pressure loss)
d = diameter of orifice, in. (orifice flow)
Fa = thermal expansion factor, obtained from tables in Ref. 2
ghp = gas horsepower
h = enthalpy, Btu/lb
h_w = orifice differential pressure, in. H_2O
H = polytropic head, ft-lb/lb
K_4 = flow coefficient (orifice flow) (if the orifice has not been calibrated individually, obtain K from tables in Ref. 2)
K_3 = resistance coefficient (pressure loss)
M = mass flow rate, lb/min
P = pressure, psia
q = flow rate, ft^3/sec
R = gas constant $= \dfrac{1545}{(\text{molecular weight})}$
s = entropy, Btu/lb-°F
T = temperature,°R
v = specific volume, ft^3/lb
W = work, ft-lb/lb
Y = net expansion factor for square-edged orifices (ratio of flow coefficient for a gas to that for a liquid at the same value of Reynolds number, obtained from tables or by equation in Ref. 2)
Z_1 = inlet compressibility factor
η = efficiency, polytropic

Subscripts:

1 = main inlet flange
2 = final discharge flange
SL1 = first sideload flange
SL2 = second sideload flange
D = design conditions

19.2 SHOP TESTING AND TYPES OF TESTS

The best way to ensure equipment quality is to specify and carry out compressor performance testing before the machine leaves the OEM factory (Fig. 19.3). Although the performance test can be done in the field once the compressor is installed, the quality of a field test is generally less than that of a shop test, and it is difficult to make corrections if necessary, as timing is always tight during the installation phase. This is true for all compressors, even "off-the-shelf" varieties. Although the design may be proven, parts can be mismachined or installed improperly. Custom-built compressors have the added risk of errors in application or design engineering.

The very well represented and universally accepted ASME Power Test Code (PTC 10-1997) has defined two types of performance tests:

- *Type 1.* This is a test run on the design gas near design conditions. This applies to air compressors, full load shop tests, and field tests.
- *Type 2.* When using the design gas for testing is not practical and a substitute gas is used for the test, a type 2 test is conducted. The gas used for the type 2 test does not have to follow the perfect gas laws.

The type 1 test is relatively simple to complete. Be certain of obtaining good data and complete calculations per PTC 10 (refer to Ref. 1). However, a type 2 test requires some

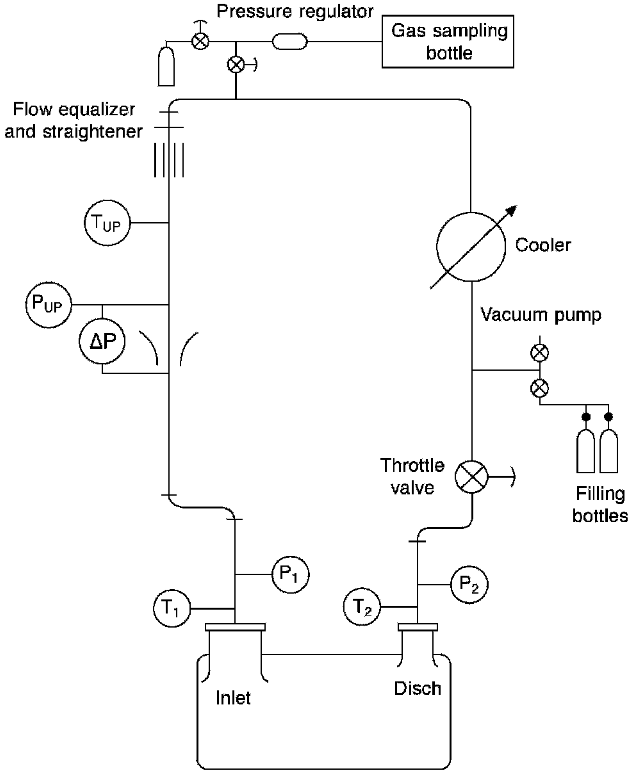

FIGURE 19.3 Typical shop test. (From Ref. 4, by permission.)

special considerations up front. In determining the proper equivalent conditions, the following three items must be reviewed: (1) volume ratio, (2) Mach number, and (3) Reynolds number. Unfortunately it is not always possible to match all three parameters with an equivalent test, so some compromise must be made.

On a multistage compressor, volume ratio is of utmost concern and must be closely matched. According to the API, the variation between test and actual values should not exceed 5%. At other than design volume ratio, downstream stages will not see the design flow and the overall curve will be affected. To assure that the test volume ratio equals the design volume ratio, use the following equation:

$$N_t = N_d \sqrt{\frac{Z_t \mathrm{MW}_d T_t}{Z_d \mathrm{MW}_t T_d}} \sqrt{\frac{[n/(n-1)]_t[(P_2/P_1)^{(n-1)/n} - 1]_t}{[n/(n-1)]_d[(P_2/P_1)^{(n-1)/n} - 1]_d}} \tag{19.11}$$

where N is the speed, N_d the design conditions, and N_t the test conditions. Note that N_t is proportional to $\mathrm{MW}_d/\mathrm{MW}_t$. Assuming a design MW of 70 and a test MW of 28 (other values fixed), the test speed would be much higher than the design speed. This normally puts the speed beyond the mechanical limits, demonstrating why air or nitrogen cannot be used for equivalent tests for a machine designed for compressing a heavy gas such as chlorine or propane.

The Mach number determines the capacity of the compressor. Therefore, it is critical to ensure that the Mach number is within 5% of the design Mach number. The equation for determining test speed to duplicate Mach number is

$$N_t = N_d \sqrt{\frac{(kgZRT)_t}{(kgZRT)_d}} \tag{19.12}$$

It is suggested that the test speed slightly exceeds the Mach number test speed for conservative results [4]. If possible, select a test gas with a k value near the design k value.

With the test speed set by volume ratio and Mach number, we are left with a variation in Reynolds number. According to ASME PTC 10-1997, the performance of a compressor is affected by the machine Reynolds number. Frictional losses in the internal flow passages vary in a manner similar to friction losses in pipes or other flow channels. If the machine Reynolds number at test operating conditions differs from that at specified operating conditions, a correction in the test efficiency is necessary to predict the performance of the compressor correctly. ASME PTC 10-1997 provides correction factors for variations in the Reynolds number.

For a type 1 test, the data are used directly to determine field performance. For a type 2 test, the following is needed to convert test data to actual field conditions.

Capacity

$$Q_d = Q_t \frac{N_d}{N_t} \tag{19.13}$$

where Q is the compressor suction flow and N is the speed.

Efficiency Since frictional losses in the compressor are a function of the machine Reynolds number, it is appropriate to apply the correction to the quantity $1 - \eta$. The magnitude of the correction increases as the machine Reynolds number decreases. The correction to be applied is as follows:

(a) For centrifugal compressors:

$$(1-\eta_p)_d = (1-\eta_p)_t \frac{RA_d}{RA_t} \frac{RB_d}{RB_t} \tag{19.14}$$

$$RA = 0.066 + 0.934\left[\frac{4.8\times10^6 \times b}{\text{Rem}}\right]^{RC} \tag{19.15}$$

$$RB = \frac{\log(0.000125 + 13.67/\text{Rem})}{\log(\epsilon + 13.67/\text{Rem})} \tag{19.16}$$

$$RC = \frac{0.988}{\text{Rem}^{0.243}} \tag{19.17}$$

where Rem = machine Reynolds number, Ub/v'.
U = tip speed of first-stage impeller or first-stage axial blade, ft/s
b = blade height at the tip of the first-stage centrifugal impeller or the cord at the tip of the first-stage axial rotor blade, ft
v' = kinematic viscosity of the gas at compressor inlet conditions, ft^2/s
ϵ = average surface roughness of the flow passage, in.

(b) For axial compressors, the correction is a function of the machine Reynolds number ratio:

$$(1-\eta_p)_d = (1-\eta_p)_t \left(\frac{\text{Rem}_t}{\text{Rem}_d}\right)^{0.2} \tag{19.18}$$

The limitations of PTC 10-1997 apply.

Head The polytropic head coefficient is corrected for machine Reynolds number in the same ratio as the efficiency:

$$\text{Rem}_{\text{corr}} = \frac{\mu_{p_d}}{\mu_{p_t}} = \frac{\eta_{p_d}}{\eta_{p_t}} \tag{19.19}$$

or for polytropic head,

$$H_{p_d} = H_{P_t} \frac{\eta_d}{\eta_t}\left(\frac{N_d}{N_t}\right)^2 \tag{19.20}$$

19.3 FIELD TESTING

Before attempting a field performance test, review the following checklist and be certain that all the data required are available, preferably in electronic form. As a reference, see your OEM instruction book for design conditions.

- Vane settings
- Pressure and temperature at each flange
- Mass flow rate
- Gas properties
- Equipment speed
- Driver power
- Compressor and driver mechanical losses
- OEM performance curves

For a field acceptance test, it is recommended that dual instrumentation be considered seriously. This will offer some redundancy and make it possible to look for flow swirl. If nothing else, do a thorough job of calibrating instruments and be sure to confirm results by checking work input and completing a power balance.

For online monitoring, the process described above is recommended, but only time will tell how often it will be necessary to recalibrate. Monitoring the work input will go a long way in confirming accurate data.

Case History 1: Hydrogen Recycle Compressor Field Performance Analysis

As part of a debottlenecking procedure, a refinery in Oklahoma was interested in analyzing its hydrogen recycle compressor performance. The compressor string consisted of a small barrel compressor and a condensing steam turbine driver. Of primary concern for data accuracy were the flowmeters and obtaining an accurate gas analysis. Accurate data were a special concern since there is no confirmation of calculation results (the steam turbine is a condensing unit).

Special care was taken to ensure accurate data. Pressure differential data from the compressor gas flowmeter was read and used directly to calculate the flow rate to the compressor. The same was done for the turbine flowmeter. Multiple gas samples were taken to ensure redundancy. It was determined that the compressor was operating at about 71% efficiency (Figs. 19.4 and 19.5; Table 19.1), about 5 percentage points below predicted values. The turbine was operating at about 44% efficiency, about 10 percentage points below its predicted value. Although the data showed that the equipment needed maintenance to get it back to design operating conditions, the compressor was shown to be operating at midrange and there was no need for a re-rate.

Startup Following a major overhaul, all the piping and vessels are filled with air rather than the process gas. So when the compressor starts, it will be on air and eventually nitrogen, once all the air is purged. For operation, the effects will be the same because the MW for air and nitrogen is 28. However, this is very different from the process gas, which has a molecular weight of 3.6.

Power demand is the first consideration because the demand cannot be allowed to exceed the available power of the driver. Also, even with unlimited driver power, the increase in power (torque!) required for operation on nitrogen might well cause a shaft end failure if the machine were operated at the same speed and pressure. To operate the compressor on nitrogen, it is thus necessary to reduce both speed and pressure. Following is a means to estimate this:

$$\text{ghp}_p = \frac{H_p \dot{M}}{\eta_p(33{,}000)} \tag{19.21}$$

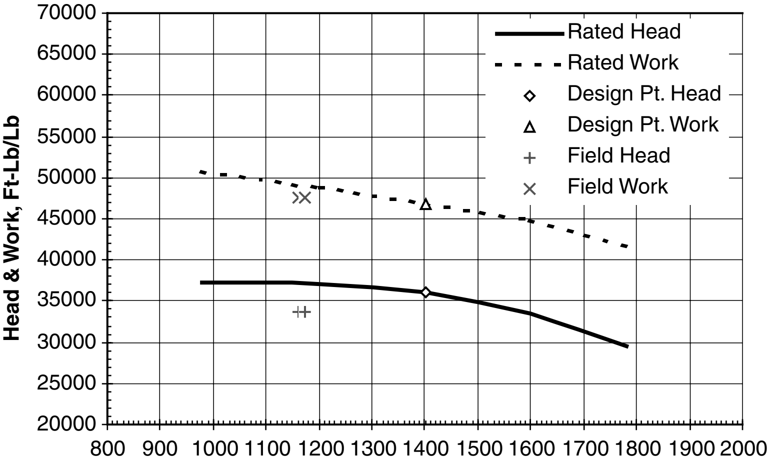

FIGURE 19.4 Hydrogen recycle compressor work and head vs. flow rate (icfm) data obtained during a field test (August 6, 2004). Data have been fan law-corrected to design speed (11,070 rpm) to permit direct comparison with OEM design curve.

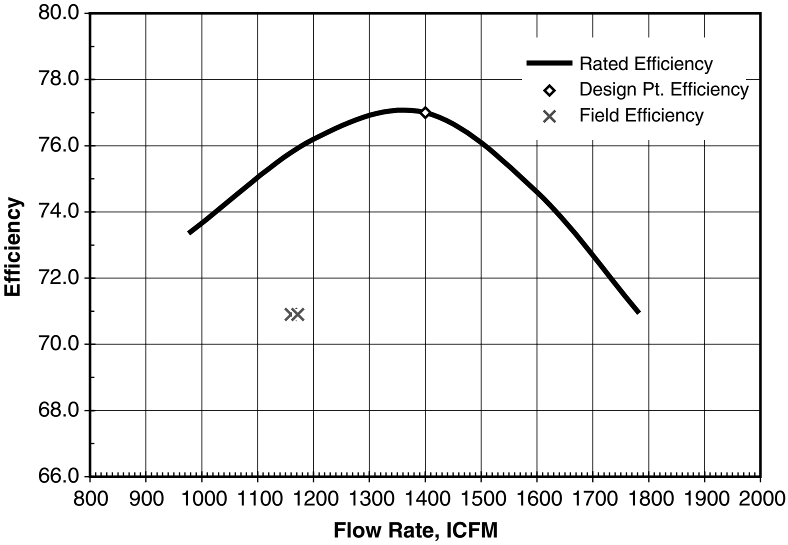

FIGURE 19.5 Hydrogen recycle compressor operating data for August 6, 2004. Data have been fan law–corrected to design speed, 11,070 rpm.

Also note that mass flow is roughly proportional to MW and pressure, so very approximately, we can say that

$$H_1 \mathrm{MW}_1 P_1 = H_2 \mathrm{MW}_2 P_2 \tag{19.22}$$

TABLE 19.1 Summary of Test Results: Hydrogen Recycle Operating Data for August 6, 2004[a]

			Gas	Mole Fraction	Formula
Compressor data					
Time	7:30 A.M.	10:30 A.M.	Hexane	0.0002	C_6H_{14}
Flow (MMscfd)	134	132	Hydrogen	0.92242	H_2
Orifice DP (in. H_2O)	19.65	18.9	Propane	0.00346	C_3H_8
Inlet T (°F)	112.5	114	*i*-Butane	0.0003	C_4H_{10}
Inlet P (psia)	1721	1724	*n*-Butane	0.00051	C_4H_{10}
Discharge T (°F)	143	144	Ethane	0.01788	C_2H_6
Discharge P (psia)	1962	1961	Nitrogen	0.0064	N_2
Speed (rpm)	11,289	11,289	Methane	0.04883	CH_4
				MW = 3.5766	
Compressor Results					
Flow (lb/min)	1139	1112			
Flow (icfm)	1195	1183			
Head (ft-lb/lb)	35,118	35,040			
Efficiency	70.9	70.9			
Power (hp)	1710	1665			
Turbine data					
Inlet P (psig)	588	589			
Inlet T (°F)	625	625			
Exhaust P (in. Hg vac.)	28.5	28.5			
Exhaust T (°F)	75	75			
Flow (1000 lbs/hr)	19.7	19.55			
Orifice DP (in. H_2O)	10.9	10.55			
Turbine results					
Flow (lb/hr)	21,568	21,240			
Efficiency	44.3	43.8			
Power (hp)	1710	1665			

[a] Note that the compressor power is identical to the steam turbine power. The compressor power was used as input data for the steam turbine calculation to determine the exhaust conditions of the condensing steam turbine.

If we decide to operate the compressor at 400-psia suction pressure while operating on nitrogen:

$$35{,}000(3.6)(1700) = H_2(28)(400)$$

$$H_2 = 19{,}125 \text{ ft of head}$$

To reduce the head on this compressor to 19,125, it is necessary to reduce the speed. Now consider the fan law equations:

$$H \propto N^2 \tag{19.23}$$

With this we can write

$$\frac{35{,}000}{19{,}125} = \left(\frac{11{,}289}{N_2}\right)^2 \qquad \text{hence, } N_2 = 8344 \text{ rpm}$$

So we will operate the compressor on nitrogen at 8344 rpm at 400-psia suction pressure and 100°F. Now estimate the discharge pressure:

$$\begin{aligned} P_2 &= \left[\frac{H_P}{Z_1 R T_1 [n/(n-1)]} + 1 \right]^{n/(n-1)} P_1 \\ &= \left[\frac{19{,}125}{1.0(55.18)(560)[1.36/(1.36-1)]} + 1 \right]^{1.36/(1.36-1)} (400) \\ &= 710\,\text{psia} \end{aligned} \tag{19.24}$$

Using the Gas Flex estimation calculation shown in Table 19.2, the power demand is calculated to be 1845 hp. Although still high, it is close to where we need to be. Operation at a slightly lower speed will bring the power down to a more conservative level.

Another variable to consider is the discharge temperature. Be sure that the discharge temperature does not exceed guidelines for the compressor. In this case the discharge temperature (~240°F) is relatively low and well within limits (Table 19.3).

To be sure, get back to the OEM for an accurate operating curve for startup conditions on nitrogen. The OEM can confirm if there are other limitations to consider at this off-design operating condition.

Case History 2: Impeller Failure on a Feed Gas Compressor

The importance of using calculation methods in failure analysis is demonstrated in this case history. A customer in northern Europe suffered an impeller failure approximately three years following the re-rate of the compressor used in this case history. The failure was on the first wheel in an intercooled compressor in a feed gas string. As part of the failure analysis, the compressor performance was reviewed to determine where the compressor was operating on the performance curve. Surge, choke, and liquid ingestion are known causes of impeller failures. Liquid can be detected by high work input.

Process and Installation The compressor installation was reviewed. Although there were a lot of elbows upstream of the inlet, this had no apparent effect on the compressor performance. As this was an up-nozzle configuration, there is a straight run of piping under the compressor where liquid could accumulate. Standard procedure is to drain any liquid before startup; however, this is not checked once the machine is running.

This unit has water injection to reduce the operating temperature. The polymer buildup in the compressor is very closely related to the gas temperature; thus, evaporation of the injected water reduces the operating temperature of the gas. The water injection nozzles have flowmeters installed, and operating flow rates were recorded for consideration of performance calculations (see Table 19.4 and 19.5).

Review of Compressor Operational History

Vibration The previous rotor (with the cracked impeller) had nominal vibration levels of about 35 μm. The present rotor is vibrating at approximately 70 μm. At startup the vibration level was about 45 μm.

Performance The present performance for compression section 1 of this machine is shown in Figs. 19.6 and 19.7. It was reported that vibration had been increasing rapidly,

TABLE 19.2 Gas Flex Straight-Through Compressor Test Results

Title: H2 Recycle
Database name: H2 Recycle.gdb

	Units	Inlet	Gas Composition	
Inlet flange data				
Pressure	psia	1724.	HEXA	0.0002
Temperature	°F	114.0		
Compressibility		1.0660	H_2	0.92242
Enthalpy	Btu/lb	971.6	C_3H_8	0.00346
Entropy	Btu/lb-°R	3.7604		
Specific volume	ft^3/lb	1.0641	IBUT	0.0003
$K(C_p/C_v)$		1.3677	BUTA	0.00051
K(temp. exp.)		1.3867		
K(vol. exp.)		1.5080	C_2H_6	0.01788
Specific heat (C_p)	Btu/mol-°R	2.0642	N_2	0.0064
Dynamic viscosity	lb/ft-sec	6.91E-06		
Sonic velocity	ft/sec	3580.1	CH_4	0.04883
Given flow	lb/min	1112.0	Total mole weight	3.5766
Mass flow	lb/min	1112.0		
Volume flow	ft^3/min	1183.3		
Discharge flange data				
Pressure	psia	1961.		
Temperature	°F	144.0		
Compressibility		1.0738		
Enthalpy	Btu/lb	1035.1		
Entropy	Btu/lb-°R	3.7918		
Specific volume	ft^3/lb	0.9917		
$K(C_p/C_v)$		1.3651		
K(temp. exp.)		1.3838		
K(vol. exp.)		1.5159		
Specific heat (C_p)	Btu/mol-°R	2.0751		
Dynamic viscosity	lb/ft-sec	7.16E-06		
Sonic velocity	ft/sec	3695.7		
Volume flow	ft^3/min	1102.7		
Total polytropic data				
Head	ft-lb/lb	35,040.0		
Efficiency		70.93		
Gas power	hp	1664.6		

Source: www.flexwareinc.com.

and according to plant records, the compressor efficiency had been getting lower as well. From this it was concluded that fouling (see Section 12.12.1) was probably occurring. A possible reason for the rapid fouling rate was a change in process gas composition that occurred at the time of the re-rate.

Liquid Ingestion A water injection system is used to reduce the compressor discharge temperature in an effort to minimize fouling. The liquid is injected into the main inlet and at the crossover between each stage. Prior to the re-rate, both water and hydrocarbon

TABLE 19.3 Gas Flex Straight-Through Compressor Estimation for Startup on Nitrogen

Title: N2
Database name: N2 Compressor.gdb

	Units	Inlet	Gas Composition	
Inlet flange data				
Pressure	psia	400.000	N_2	1
Temperature	°F	100.0	Total mole weight	28.0130
Given flow	icfm	1200		
Volume flow	ft^3/min	1200.		
Mass flow	lb/min	2255.8		
Compressibility		0.9927		
Min. flange diameter	in.	5.1		
Flange velocity	ft/sec	140.0		
Discharge flange data				
Pressure	psia	697.		
Temperature	°F	239.6		
Volume flow	ft^3/min	870		
Compressibility		1.0039		
Min. flange diameter	in.	4.4		
Flange velocity	ft/sec	140.0		
Total head data				
Head	ft-lb/lb	19,158		
Efficiency		71.00		
Gas power	hp	1845		

Source: www.flexwareinc.com.

liquids were used. However, following the re-rate, only water was used. Since the re-rate, no water has been injected in the main inlet, so the water injection cannot be a contributor to the impeller failure. The spray nozzles had a 20-bar pressure differential for good atomization of the water. Other possible sources of liquid were thought to include carryover of knockout liquids from the cooler.

This particular failure seemed to be unrelated to any existing known failure mode. It seemed unlikely that the cause was related to operation in choke flow or to overload. Operation was near the design point and the failure was on the first impeller. Yet the performance was to be monitored to confirm that the compressor remained within the limits of the performance curve. The customer was advised to monitor the vibration and performance of the compressor closely to find the source of the excitation that initiated the impeller cracking.

Effects of the Liquid Injection The effects of the liquid injection were calculated by considering the amount of water being injected and knowing the latent heat of vaporization. The customer was measuring the water flow using an orifice meter, and it was calculated to be 2600 lb/hr for this section. From Fig. 19.8, the latent heat of vaporization of the water is 898 Btu/lb.

The compressor gas mass flow rate was 421,116.8 lb/hr, and from Table 19-4 the discharge enthalpy is 255.2 Btu/lb.

$$421{,}116.8\ \text{lb/hr} \times 255.2\ \text{Btu/lb} = 107,469,001\ \text{Btu/hr}$$

TABLE 19.4 Gas Flex Calculation Summary of Field Test Results[a]

Title:	Boreallis F8239 18 Aug04
Database name:	F8239 12AUG04b.GFE

Gas Analysis: Total mol. weight = 23.27

Gas	Mol. Fr.	Gas	Mol. Fr.	Gas	Mol. Fr.	Gas	Mol. Fr.	Gas	Mol. Fr.
H_2	0.23420	CH_4	0.22100	C_2H_4	0.30060	C_2H_6	0.08200	C_2H_2	0.00410
C_3H_6	0.07050	C_3H_8	0.00670	PRPD	0.00270	H_2O	0.00980	IBUT	0.00150
IBTE	0.00710	IBYN	0.00500	12BU	0.01500	BUTA	0.00350	2M1B	0.00290
MEK	0.00190	IPRE	0.00120	IPEN	0.00090	NPEN	0.00260	MCYP	0.00620
CYH	0.00130	C_6H_6	0.01340	C_7H_8	0.00280	STYR	0.00310		

Test Point 1

Inlet data		
Pressure	abs. bar	3.347
Temperature	°C	25.7
Compressibility		0.9866
Enthalpy	Btu/lb	191.6
Entropy	Btu/lb-°R	1.7093
Specific volume	m^3/kg	0.3147
$K(C_p/C_v)$		1.2257
K(temp. exp.)		1.2360
K(vol. exp.)		1.2298
C_p	kJ/kmol · K	0.4631
Dynamic viscosity	mPa · s	1.030E-02
Sonic velocity	m/s	359.9
Given flow	kg/h	191,000.0
Mass flow	lb/hr	421,116.8
Volume flow	m^3/h	60,104
Discharge data		
Pressure	abs. bar	8.337
Temperature	°C	100.0
Compressibility		0.9859
Enthalpy	Btu/lb	255.2
Entropy	Btu/lb-°R	1.7378
Specific volume	m^3/kg	0.1576
$K(C_p/C_v)$		1.1933
K(temp. exp.)		1.2038
K(vol. exp.)		1.1979
C_p	kJ/kmol · K	0.5266
Dynamic viscosity	mPa · s	1258E-02
Sonic velocity	m/s	396.7
Volume flow	m^3/h	30,106
Overall polytropic data		
Head	N · m/kg	107,932
Efficiency	%	73.0
Power	kW	7848.9

Source: www.flexwareinc.com.

[a] Discharge temperature as measured in the field. Since water is being injected into the gas stream to reduce the operating temperature, the calculation must be compensated for the effect of the water. The operating efficiency shown is incorrect due to the effect of the evaporating water, as the calculation assumes dry gas.

TABLE 19.5 Gas Flex Calculation Summary of Field Test Results[a]

Title: Boreallis F8239 18 Aug04
Database name: F8239 12AUG04.GFE

Gas Analysis: Total mol. weight = 23.27

Gas	Mol. Fr.	Gas	Mol. Fr.	Gas	Mol. Fr.	Gas	Mol. Fr.	Gas	Mol. Fr.
H_2	0.23420	CH_4	0.22100	C_2H_4	0.30060	C_2H_6	0.08200	C_2H_2	0.00410
C_3H_6	0.07050	C_3H_8	0.00670	PRPD	0.00270	H_2O	0.00980	IBUT	0.00150
IBTE	0.00710	IBYN	0.00500	12BU	0.01500	BUTA	0.00350	2M1B	0.00290
MEK	0.00190	IPRE	0.00120	IPEN	0.00090	NPEN	0.00260	MCYP	0.00620
CYH	0.00130	C_6H_6	0.01340	C_7H_8	0.00280	STYR	0.00310		

		Test Point 1
Inlet data		
Pressure	abs. bar	3.347
Temperature	°C	25.7
Compressibility		0.9866
Enthalpy	Btu/lb	191.6
Entropy	Btu/lb-°R	1.7093
Specific volume	m^3/kg	0.3147
$K(C_p/C_v)$		1.2257
K(temp. exp.)		1.2360
K(vol. exp.)		1.2298
C_p	kJ/kmol · K	0.4631
Dynamic viscosity	mPa · s	1.030E-02
Sonic velocity	m/s	359.9
Given flow	kg/h	191,000.0
Mass flow	lb/hr	421,116.8
Volume flow	m^3/h	60,104
Discharge data		
Pressure	abs. bar	8.337
Temperature	°C	105.7
Compressibility		0.9868
Enthalpy	Btu/lb	260.7
Entropy	Btu/lb-°R	1.7459
Specific volume	m^3/kg	0.1602
$K(C_p/C_v)$		1.1914
K(temp. exp.)		1.2013
K(vol. exp.)		1.1959
C_p	kJ/kmol · K	0.5308
Dynamic viscosity	mPa · s	1.277E-02
Sonic velocity	m/s	399.6
Volume flow	m^3/h	30,593
Overall polytropic data		
Head	N · m/kg	108,915
Efficiency	%	67.8
Power	kW	8518.0

Source: www.flexwareinc.com.

[a] The discharge temperature has been adjusted to compensate for the evaporating water. Note the difference in the compressor efficiency between that in Fig. 19.7 and that shown in this table. The temperature change due to the water evaporation is 5.7°C.

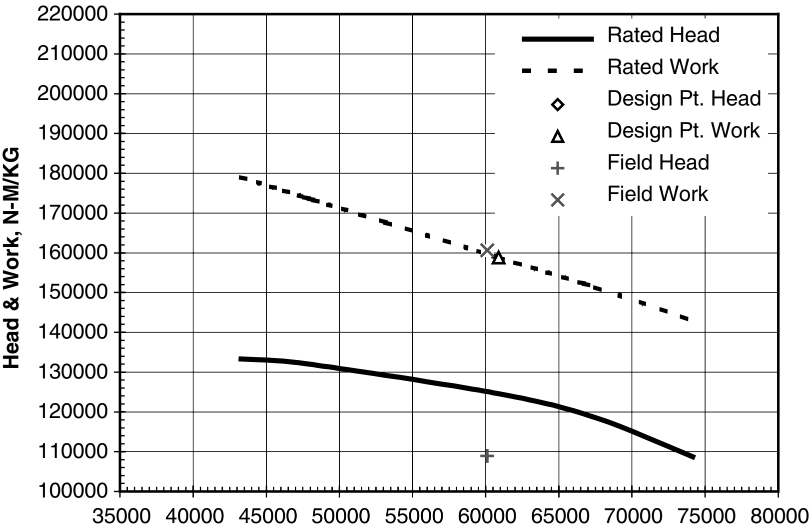

FIGURE 19.6 Performance test data for Case History 2, head and work vs. flow, cubic meters per hour.

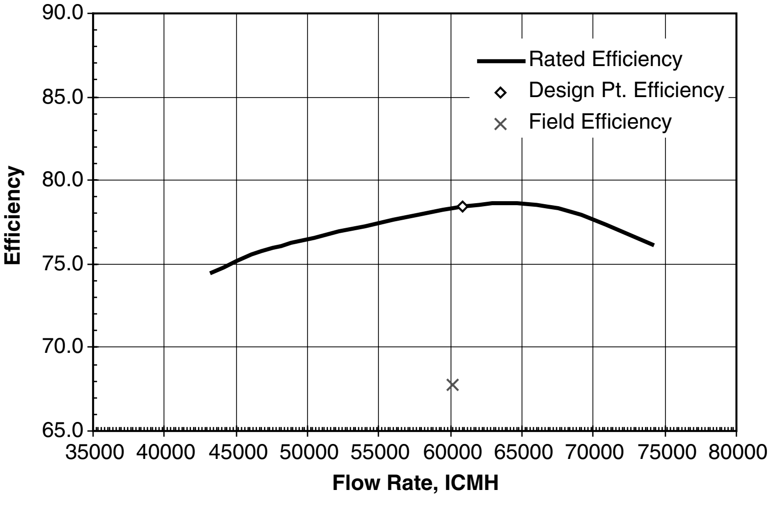

FIGURE 19.7 Compression section 1, performance for August 12, 2004.

The latent heat of vaporization is

$$2600 \text{ lb/hr} \times 898 \text{ Btu/lb} = 2{,}334{,}800 \text{ Btu/hr}$$

Add the latent heat of vaporization:

$$107{,}469{,}001 \text{ Btu/hr} + 2{,}334{,}800 \text{ Btu/hr} = 109{,}803{,}801 \text{ Btu/hr}$$

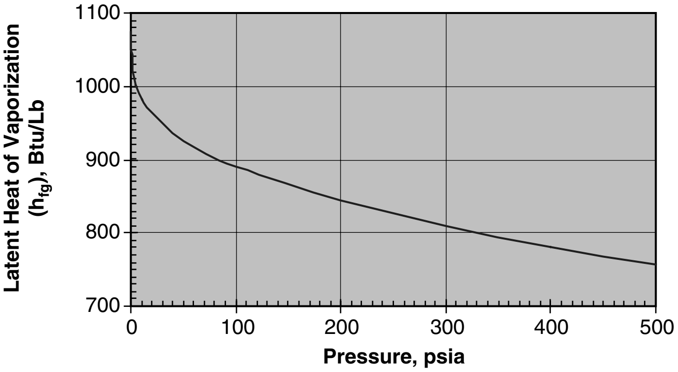

FIGURE 19.8 Latent heat of vaporization of water vs. pressure. (Data from Ref. 5.)

Now divide by the mass flow rate to obtain the discharge enthalpy:

$$109{,}803{,}801\,\text{Btu/hr} \times \frac{1}{421{,}116.8}\,\text{hr/lb} = 260.7\,\text{Btu/lb}$$

Thus, the temperature corresponding to 260.7 Btu/lb is the correct discharge temperature to be used in calculating the actual compressor performance.

Case History 3: Avoiding Damage to Refrigeration Compressors

Refrigeration systems contain liquefied gases, but compressors can be wrecked if allowed to ingest these liquids. When the plant is designed, precautions are taken by the designer to ensure that liquid ingestion is avoided. These precautions include designing components such as evaporators and knockout drums so as to preclude carryover of liquids into the compressor suction. High-speed turbomachinery can withstand only limited amounts of liquid; typical limits are in the range 3 to 5% by weight. However, during periods of high market demand, plants are temped to push the capacity well beyond normal design limits. Although at first causing no apparent distress to the equipment, the increased throughput often results in velocities beyond the design limits of the evaporators and knockout drums. This greatly increases the risk of liquid ingestion and operation in overload.

An event of this type caused a plant in southern Europe to experience multiple impeller failures on the last stage of a propylene refrigeration compressor. It is expected that the high flow operation (Fig. 19.9) is causing the impeller failures. Analysis of the field data shows the compressor to be operating in overload (Fig. 19.10 and Table 19.6). Note the high head, high work input, and high efficiency. This suggests liquid ingestion. The liquid (in mist form) gives the gas more density and results in a greater pressure ratio. The evaporation of the liquid results in a reduced discharge temperature; thus, the calculation, assuming dry gas, shows an abnormally high efficiency and work input.

Work done on other refrigeration compressors where impeller failures have occurred shows similar results (high head, high work input, high efficiency, and operation in overload). Also, work done by Dresser-Rand (Figs. 19.11 and 19.12) shows a high pressure gradient in the last stage wheel due to the volute cutoff. This pressure gradient has the potential to excite impeller frequencies and cause eventual fatigue failures. Liquids in the gas stream generate higher flow rates as the liquid evaporates, pushing the last stage impeller deeper and deeper into choke. The entrained liquid amplifies the pressure gradient of the volute cutoff.

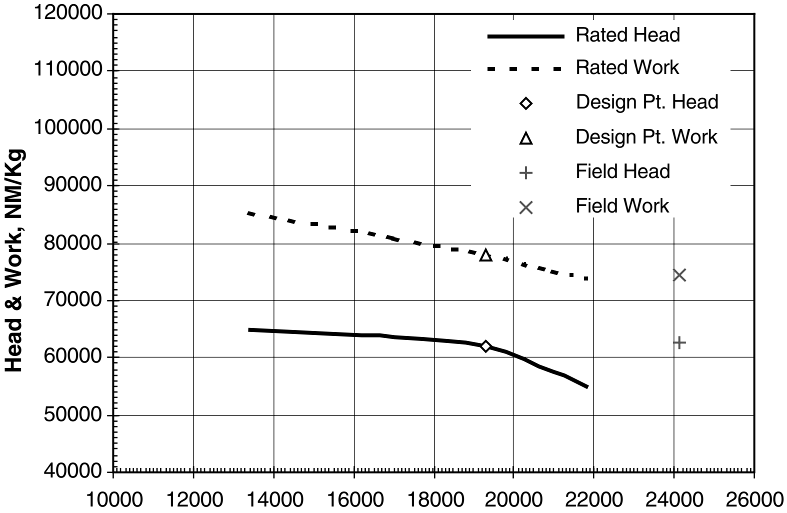

FIGURE 19.9 Comparison of rated head and rated work (vertical scale) vs. flow rate, cubic meters per hour, (horizontal scale). Note the discrepancy between "per design" and "as found in field" data. Note how the field head and work input seem abnormally high and beyond the performance curve limits. The results are fan law-corrected to the OEM design speed of 7060 rpm so the data can be directly compared to the design curve.

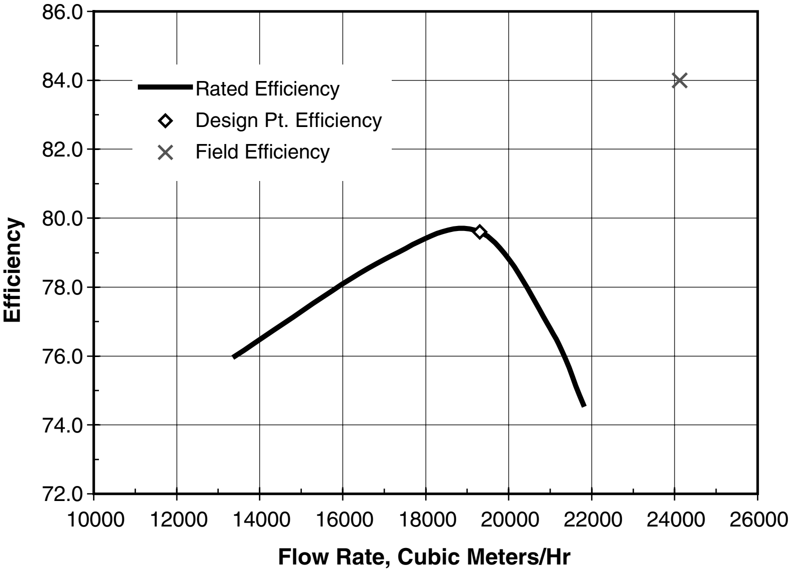

FIGURE 19.10 Performance curve for the third section of a refrigeration compressor. The results are fan law–corrected to a design speed of 7060 rpm. Note how efficiency and flow are beyond the performance curve limits. This suggests that liquids are passing through the compressor. There is a concern related to impeller fatigue failure caused by operation in deep choke and by liquid impingement.

TABLE 19.6 Gas Flex® Sidestream Sectional Analysis Summary[a]

Title: Propylene Refrigeration
Database name: Choke.gdb

	Units	Inlet	SS-1	SS-2	Discharge
Inlet flange data					
Pressure	bar	1.210	2.590	4.580	
Temperature	°C	−30.0	−17.6	2.8	
Given flow	kg/h	73,060.	31,020.	94,605.75	
Volume flow	m^3/h	27,863	5618	11,174	
Mass flow	kg/h	73,060.0	31,020.0	104,045.0	
Compressibility		0.9631	0.9316	0.9046	
Flange diameter	mm	522.8	231.4	326.1	
Flange velocity	m/s	388.2	399.6	400.2	
Discharge flange data					
Pressure	bar				14.18
Temperature	°C				82.8
Volume flow	m^3/h				8880
Mass flow	kg/h				208,125.0
Compressibility					0.8685
Flange diameter	mm				271.3
Flange velocity	m/s				459.3
Inlet section data					
Compressibility		0.9631	0.9515	0.9264	
Temperature	°C	−30.0	8.4	23.2	
Volume flow	m^3/h	27,863	21,215	24,583	
Mass flow	kg/h	73,060.0	104,080.0	208,125.0	
Discharge section data					
Compressibility		0.9575	0.9415	0.8685	
Temperature	°C	19.2	43.2	80.4	
Volume flow	m^3/h	15,557	13,336	8880	
Sectional head data					
Head	$N \cdot m/kg$	38,506	31,783	65,044	
Efficienty		57	63	84	
Gas power	kW	1382	1460	4470	
Total polytropic data					
Head	$N \cdot m/kg$	135,333			
Efficiency		69.09			
Gas power	kW	7311			

Source: www.flexwareinc.com.

[a] Results of calculation for propylene refrigeration compressor. Note the exceptionally high efficiency for the last section.

19.4 PREDICTING COMPRESSOR PERFORMANCE AT OTHER THAN AS-DESIGNED CONDITIONS*

As discussed in the preceding sections of this chapter, accurate testing is feasible but could be time consuming. That is where screening studies are often of great value, especially if compressor performance at new conditions is to be predicted.

---

* Developed by Arvind Godse and originally published in *Hydrocarbon Processing,* June 1989. Adapted by permission of Gulf Publishing Company, Houston, Tex.

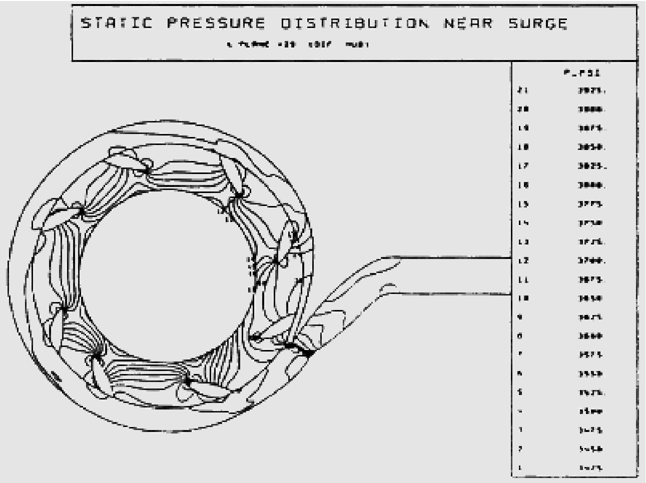

FIGURE 19.11 CFD profile of pressure gradient around the periphery of a discharge volute for a compressor operating near surge. Note how the pressure is relatively uniform. (From Ref. 6; reproduced by permission of the Turbomachinery Laboratory, Texas A&M University, College Station, Tex.)

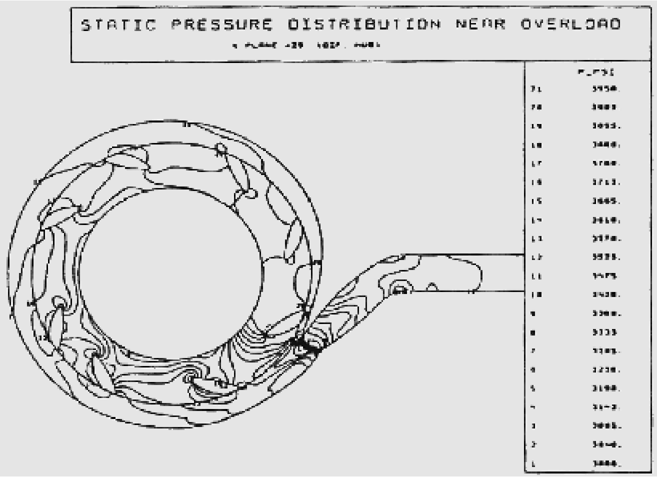

FIGURE 19.12 CFD profile of pressure gradient around the periphery of a discharge volute for a compressor operating in overload conditions. Note the large pressure change at the volute cutoff. This gradient can trigger resonant frequencies in the impeller and eventually cause fatigue failure of the impeller. Testing and CFD evaluation were in general agreement. (From Ref. 6; reproduced with permission of the Turbomachinery Laboratory, Texas A&M University, College Station, Tex.)

To reiterate, the performance of centrifugal compressors is generally documented during shop tests or during field tests at the installation site. Accurate test data will make it possible to predict compressor performance with different gas or operating characteristics at some future date. Moreover, since centrifugal compressor impeller dimensions are often custom-made for a specific operating condition, adjustments may be needed to meet a specific performance.

It is often necessary to arrive at a new speed for variable-speed-driven machines, or to trim the impellers for motor-driven machines, if there is a considerable gap between proposed performance and test stand performance. Similarly, compressor owners may want to determine how a machine would perform with a different gas or with some new operating parameters. Dimensionless numbers provide a convenient way to predict off-design performance.

19.4.1 How Performance Tests Are Documented

Knowing the performance of an existing compressor is a prerequisite for determining performance at new conditions. However, not all compressor manufacturers document performance test results in the same format. Many of them now use computer programs to record or display the results. Still, in some places they resort to manual calculations, which are then displayed in curve shape. Typical examples of performance curve presentation found after surveying a few performance reports show the combinations shown in Table 19.7.

19.4.2 Design Parameters: What Affects Performance

To judge the performance of a machine at off-design conditions, one must know which factors are of prime importance. Examining a compressor is facilitated by understanding the governing laws of similarity as well as through use of dimensionless numbers. This will provide insight as to how a machine can be adapted to varying demands, such as load changes, unforeseen changes in thermodynamic properties, or trying to assess the feasibility of using the existing machine for a different application. When a machine is sold, the basic information on the impeller geometry often remains proprietary. However, using just three rules of thumb and understanding the dimensionless coefficients highlighted earlier in the book allow us to closely approximate machine behavior:

- Head of a compressor varies as the square of tip speed.
- Flow handled by the compressor varies directly with tip speed and impeller diameter.
- The entire design concept of a centrifugal machine can be separated into two areas from a manufacturer's point of view: thermodynamic and mechanical.

Thermodynamic Considerations For the proposed gas, with thermodynamic properties, flow rate, and pressure ratios defined by the original user, the manufacturer selects the correct impeller geometry. Here, the manufacturer will invariably employ dimensionless numbers vs. pressure coefficient ψ flow coefficient ϕ, and their relationship with polytropic

TABLE 19.7 Performance Curve Displays

Sequence	X Axis	Y Axis
1	Inlet volume (icfm)	Discharge pressure
2	Inlet volume (icfm)	Polytropic efficiency
3	Inlet volume (icfm)	bhp
4	Inlet volume (icfm)	Pressure ratio
5	Inlet volume (icfm)	Power ratio
6	Inlet volume (icfm)	Polytropic head
7	Mass flow (lb/min)	Pressure ratio
8	Mass flow (lb/min)	bhp

efficiency η_p. This will help in selecting impeller geometry, number, and configuration. While the manufacturer obviously uses these parameters for his or her selection, we can use them to predict the performance of the machine at other conditions. These dimensionless numbers show the relationship between head, flow, tip speed, and efficiency for a selected blade geometry. They are rarely presented as standard information. However, one can calculate them and plot their graphs, showing their relationship to performance test data. The simplicity of this exercise will be appreciated when investigating engineers have many machines in their plants. Since the theory behind all this has been explained earlier, the rest of this write-up describes the associated formulas and provides an example.

Mechanical Considerations After selecting the impellers, the manufacturer will consider the following:

- Material selection
- Type of split-line orientation and casing configuration
- Rotor layout, depending on the type of casing design and number of impellers. This will involve bearing span, bearing sizing, calculation of critical speeds, and making sure that they are away from the operating speed range. It will also require design decisions to finalize:
    a. Seal design and seal system components
    b. Lube system
    c. Driver rating

From a *future* application point of view, one must have satisfactory answers to a number of questions before the decision can be made to operate an *existing* compressor under *new* conditions:

- Are the existing impellers able to meet flow and head requirements?
- Is the speed selected within an acceptable range for the existing machine?
- Is the casing pressure and type of split orientation satisfactory for the new application?
- Is the material selection of the machine acceptable?
- Is the seal system capable of handling the new application?
- Is the power requirement within the existing driver rating?

When one is trying to adapt the existing machine to changes in operating parameters within a narrow band, the answers will be satisfactory in most cases. The matter can be even simpler for a variable-speed driver.

19.4.3 What to Seek from Vendors' Documents

Many inspection records are submitted by the vendor. It will be beneficial to reduce the data for all centrifugal machines bought through multiple sources to a common format. It is also important to know why reference is initially made to performance data obtained at the manufacturer's facility. Since the machine is new, passages are clean and clearances are per design recommendation. Therefore, these data would obviously help the user to track performance changes occurring with time.

Performance Test Data As pointed out earlier, all manufacturers present the data in different ways. Therefore, arrange to segregate the data for five parameters that normally make up the performance test:

- Polytropic head
- Polytropic efficiency
- Inlet flow
- Mechanical losses
- Critical speed

The last two items are obtained from a mechanical running test. Mechanical run tests are mandatory for centrifugal compressors and are usually conducted prior to the optional shop performance test.

Other inspection records should be reviewed to ascertain:

- Number of impellers
- Individual impeller diameters

In addition, we need to know:

- Casing design pressure and test pressure: hydraulic or pneumatic and its split
- Type of seal and seal system pressure and flow
- Metallurgy of important parts
- Driver rating and speed range

19.4.4 Illustrations and Example

Table 19.8 highlights our nomenclature and associated formulas. Next, an example will show the method employed for arriving at performance at new conditions. The results should always be compared with ratings and capabilities of the compressor and its driver and associated upstream/downstream equipment to verify feasibility.

Figure 19.13 represents a flowchart of the method and procedural sequence we apply to analyze performance of dynamic compressors at new conditions.

Example 19.1

Step 1: Purchase specification data or data known for existing compressor.

• Inlet conditions:	pressure	540 psia (P_1)
	temperature	140°F (T_1)
	compressibility	0.901 (Z)
	K	1.220
	MW	22.23
	flow rate	2654 lb/min (G)
• Discharge conditions:	pressure	1330 psia (P_2)
• Rotor data:	impeller diameter	16.5 in. (D_m and D_s)
	number of impellers	5 (I)
	proposal speed	9600 (N)

TABLE 19.8 Nomenclature and Formulas

Description	Symbol	Formula
Molecular weight	MW	—
Adiabatic exponent	K	C_p/C_v
Polytropic efficiency	η_p	
Polytropic exponent	n	—
Polytropic compression exponent	x	$(n - 1)/n = (K - 1)/K\eta_p$
Gas constant	R	1544/MW
Compressibility	Z	—
Pressure ratio	r	P_2/P_1
Inlet temperature, °F	T_1	—
Head, ft-lb/lb	H_p	$ZR(T_1 + 460)\,(r^x - 1)/x$
Speed, rpm	N	—
Mean impeller diameter, in.	D_m	—
Suction impeller diameter, in.	D_s	—
Number of impellers	I	—
Weight flow rate, lb/min	G	—
Suction volume, ft³/min	O_s	—
Flow coefficient	ϕ	$700Q_s/N(D_s)^3$
Pressure coefficient	ψ	$\frac{H_p(1300)^2}{IN^2D_m^2}$
Gas hp	W_G	$GH_p/33{,}000\eta_p$
Mechanical loss at speed hp N	W_M	—
Mechanical loss at speed N_1	W_{M1}	$W_M\,(N_1/N)^2$
bhp at speed N	W	$W_G + W_M$

Critical speeds: first: 6240 rpm
second: 15,280 rpm
Frictional hp at 9600 rpm: 44

- Driver: variable-speed range, 85 to 105%
  rating: 4500 hp
- Performance test data at 9600 rpm

We now proceed to arrange available performance test data in tabular format as follows. Alternatively, we could simply examine the compressor vendor's performance test curve and identify eight points on this curve. For each of these arbitrarily chosen points, we find corresponding head and flow values from the *X*–*Y* coordinates associated with this curve plot.

Let us suppose that we obtained the following:

Point	1	2	3	4	5	6	7	8
Head, H_p	38,050	37,875	37,660	37,235	36,500	35,210	32,965	27,458
Flow, Q_s	1046	1120	1190	1296	1410	1556	1726	1950
η_p	0.684	0.697	0.711	0.726	0.739	0.752	0.762	0.731

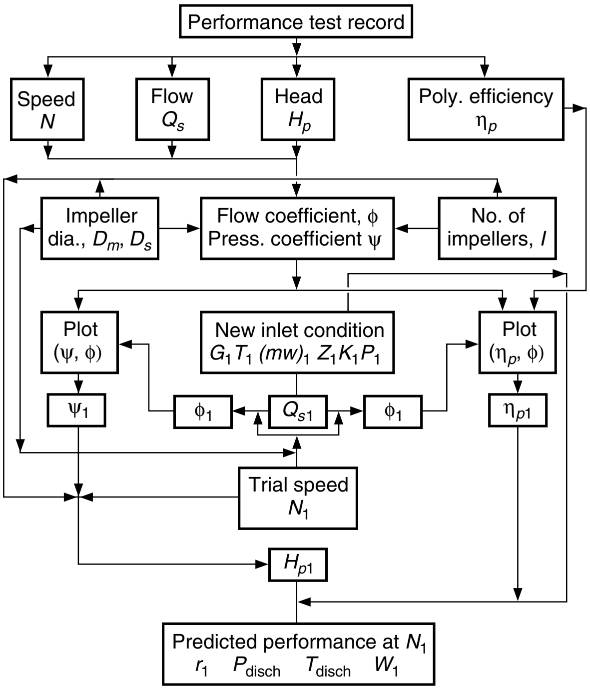

FIGURE 19.13 Flow diagram for reevaluating performance. (From Arvind, Godse, Predicting compressor performance at new conditions, *Hydrocarbon Processing,* June 1989.)

This now enables us to calculate corresponding values of φ and ψ for each of the eight points. We use the expressions listed in Table 19.8.*

Step 2: Obtain the flow coefficient and head coefficient.

Point	1	2	3	4	5	6	7	8
φ	0.0169	0.0181	0.0194	0.0210	0.0228	0.02524	0.02800	0.03165
ψ	0.5125	0.5102	0.5073	0.5016	0.4916	0.4743	0.4440	0.3698

Step 3: Plot the graph as shown in Fig. 19.14.

---

* Note again how, for example, data for point 4 were calculated:

$$\begin{aligned}\phi &= 700Q_s/ND_s^3\\ &= (700)(1296)/(9600)(16.5)^3\\ &= 0.0210\\ \psi &= H_p\ (1300)^2/IN^2D_m^2\\ &= \frac{(37{,}235)(1{,}690{,}000)}{(5)(9216)(10^4)(272.25)}\\ &= 0.5016\end{aligned}$$

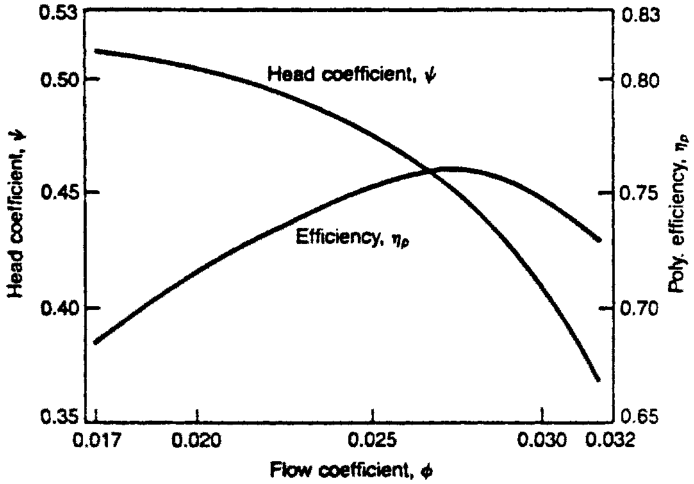

FIGURE 19.14 Relationship of head coefficient, flow coefficient, and polytropic efficiency for a given compressor. (From Arvind, Godse, Predicting compressor performance at new conditions, *Hydrocarbon Processing,* June 1989.)

Step 4: New operating conditions:

- Inlet pressure: 560 psia (P_1)
- Inlet temperature: 130°F (T_1)
- Molecular weight: 24.45 (MW)
- Flow rate: 3000 lb/min (G)
- Other inlet conditions remain as in step 1
- Discharge pressure required, $P_2 = 1330$ psia

To predict the performance of the compressor at the new operating conditions, take the following steps:

Step 5: Find the inlet volume [from $Q_s = \text{ZGRT}_1/\text{MW}(144)P_1$]:

$$Q_s = \frac{(0.901)(3000)(1544)(130+460)}{(24.45)(144)(560)} = 1248.86\,\text{ft}^3/\text{min}$$

Step 6: Since the molecular weight is higher than that of the original case, a higher discharge pressure will be generated. Therefore, choose a lower speed.

- Trial 1: Speed selected = 8900 rpm

Step 7: Find the flow coefficient ϕ at the new inlet conditions and a trial speed of 8900 rpm [from $\phi = (700)(1248.86)/(8900)(16.5)^3$].

$$\phi = 0.02186$$

From the graph in Fig. 19.14, find the corresponding:

- Polytropic efficiency, $\eta_p = 0.732$
- Head coefficient, $\psi = 0.497$

Step 8: For the given impeller diameters and number of impellers, the head developed will be

$$0.497 = \frac{H_p(1300)^2}{(5)(8900)^2(16.5)^2}$$

$$H_p = 31{,}709 \text{ ft-lb/lb}$$

Step 9:

$$\frac{n-1}{n} = \frac{k-1}{k\eta_p}$$

$$= \frac{0.22}{(1.22)(0.732)}$$

$$= 0.2463$$

Step 10: Find the pressure ratio r [from $H_p = ZRT(r^x - 1)/(x)(\text{MW})$].

$$31{,}709 = \frac{(0.901)(1544)(590)(r^{0.2463} - 1)}{(0.2463)(24.45)}$$

$$\frac{P_2}{P_1} = 2.3378$$

Step 11: $P_2 = (560)(2.3380) = 1309.17$ psia

From the preceding it is clear that the speed needs to be increased, since the discharge pressure is less than 1330 psia. Let us choose 9000 rpm and find the results.

Step 12: Using the procedure as given in steps 7, 8, 9, and 10, the following information is obtained:

$$\phi = 0.02162 \qquad \text{from } \frac{(700)(1248.86)}{(9000)(16.5)^3} = \phi$$

$$\eta_p = 0.731$$

$$\psi = 0.498$$

$$H_p = 32{,}491 \qquad \text{from } \frac{(0.498)(5)(9000)^2(16.5)^2}{(1300)^2} = H_p$$

$$r = 2.3820$$

$$P_2 = 1334.0 \text{ psia}$$

The speed selected, 9000 rpm, is in order.

$$W_G = \frac{(32{,}491)(3000)}{(33{,}000)(0.731)} = 4040.66 \qquad \text{from} \quad \frac{H_p G}{33{,}000\eta_p} = W_G$$

Step 13: Mechanical losses at 9000 rpm:

$$\begin{aligned} W_M &= (44)\left(\frac{9000}{9600}\right)^2 \\ &= 38.67\,\text{hp} \end{aligned}$$

Step 14:

$$\begin{aligned} \text{bhp} &= 4040.66 + 38.67 \\ W &= 4079.33 \end{aligned}$$

Step 15: Discharge temperature [from $T_{2,\text{actual}} = T_{2,\text{is}} = T_1(P_2/P_1)^{(k-1)/k}$]:

$$T_{dis} = 730.8°\text{F(abs.)}$$

REFERENCES

1. M. T. Gresh, *Compressor Performance: Aerodynamics for the User*; Butterworth-Heinemann, Woburn, Mass., 2001.
2. American Society of Mechanical Engineers, Flow measurement, Chapter 4 in Instruments and Apparatus, ASME PTC 19.5; 4-1959, ASME, New York, 1959.
3. John Crane Company, Crane Technical Paper 410, Crane, Chicago, 1988.
4. Elliott Company, *Compressor Refresher*, Elliott, Jeannette, P., 1975.
5. J. H. Keenan, F. G. Keyes, P. G. Hill, and J. G. Moore, *Steam Tables: Thermodynamic Properties of Water Including Vapor, Liquid, and Solid Phases*, Wiley, New York, 1969.
6. Cyril Borer, James Sorokes, Thomas McMahon, and Edward Abraham, An assessment of the forces acting upon a centrifugal impeller using full load, full pressure hydrocarbon testing, presented at the 26th International Turbomachinery Symposium, Houston, Tex.

20

PROCUREMENT, AUDIT, AND ASSET MANAGEMENT DECISIONS

By now the careful reader will have become acquainted with the basics of compressor technology. He or she will have little difficulty accepting the premise that considerable forethought has to go into compressor specification, procurement, manufacturing, inspection, testing, field erection, operation, and maintenance. All of these must retain a reliability focus, and that's where the concluding chapter topics will be of help.

20.1 INCENTIVES TO BUY FROM KNOWLEDGEABLE AND COOPERATIVE COMPRESSOR VENDORS

Reliability-focused companies generally do not find it too difficult to select from among several available compressor manufacturers. Their selection task is facilitated because as reliability-focused purchasers, they will invite only experienced manufacturers to submit their proposals. In other words, compressor preselection starts by inviting bids from prequalified, capable, and experienced manufacturers only.

Note that three principal characteristics identify capable, experienced equipment vendors [1]:

- They are in a position to provide extensive experience listings for equipment offered and will submit this information without much hesitation.
- Their compression equipment enjoys a reputation for sound design and infrequent maintenance requirements.
- Their marketing personnel are thoroughly supported by engineering departments. Also, both groups are willing to provide technical data beyond those that are customarily submitted with routine proposals.

A Practical Guide to Compressor Technology, Second Edition, By Heinz P. Bloch

Vendor competence and willingness to cooperate are shown in a number of ways, but data submittal is the first real test. When offering compression equipment required to comply with the standards of the API (the American Petroleum Institute, i.e., the latest applicable edition of API-617 for centrifugal, or API-618 for reciprocating compressors), a capable vendor will make diligent efforts to fill in all of the data requirements of the API specification sheet. However, the depth of technical know-how will show in the way in which a vendor-manufacturer explains exceptions taken to API standards or supplementary user's specifications.

20.2 INDUSTRY STANDARDS AND THEIR PURPOSE

Reliability specialists are encouraged to utilize industry standards whenever possible. Some of these standards comprise over 200 pages of narrative and illustrations, and Figs. 20.1 and 20.2 are only two of the many data pages of API-617 and API-618. These and related standards have been issued for compressor drivers and auxiliary systems; their use is considered mandatory by reliability-focused purchasers. However, those contemplating use of these specifications should realize that API standards contain a large number of clauses that require exercising certain purchase options. The pertinent paragraphs typically start with: "When specified …" or "With the purchaser's approval …" Obviously, these caveats should compel purchasers or their representatives to take a very close look at this or any other API specification for process machinery.

Still, decades of favorable experience support the contention that well-written standards improve equipment uniformity and quality. The foreword to the NEMA (National Electric Machinery Association) standard explains the scope and purpose and could serve as a model for what standards are all about.

20.2.1 Typical Scope of Standards

API, NEMA, and many other standards have been developed and approved for publication as industry guidelines, not laws. They are intended to assist users in the proper selection and application of machinery, and they serve that purpose exceedingly well. These standards are revised periodically to provide for changes in user needs, advances in technology, and changing economic trends. All persons having experience in the selection, use, or manufacture of the equipment at issue are encouraged to submit recommendations that will improve the usefulness of the standards.

The collective judgment of users and manufacturers on the performance and construction of machinery is represented in these standards. They are generally based on sound engineering principles, research, and records of test and field experience. Also involved is an appreciation of the problems of manufacture, installation, and use derived from consultation with and information obtained from manufacturers, users, inspection authorities, and others having specialized experience. For machines intended for general applications, anticipated user needs are often determined by the equipment manufacturer. The manufacturer perceives these needs through normal commercial contact with users.

For some machines intended for definite applications, the organizations that participated in the development of the standards are listed at the beginning of those definite-purpose equipment standards. Practical information concerning performance, safety, testing, construction, and manufacture of machinery within the product scopes are often defined in the applicable section or sections of a standard. Although some definite-purpose machines are occasionally included, the standards do not apply to all machines that are called, say, "compressors." For

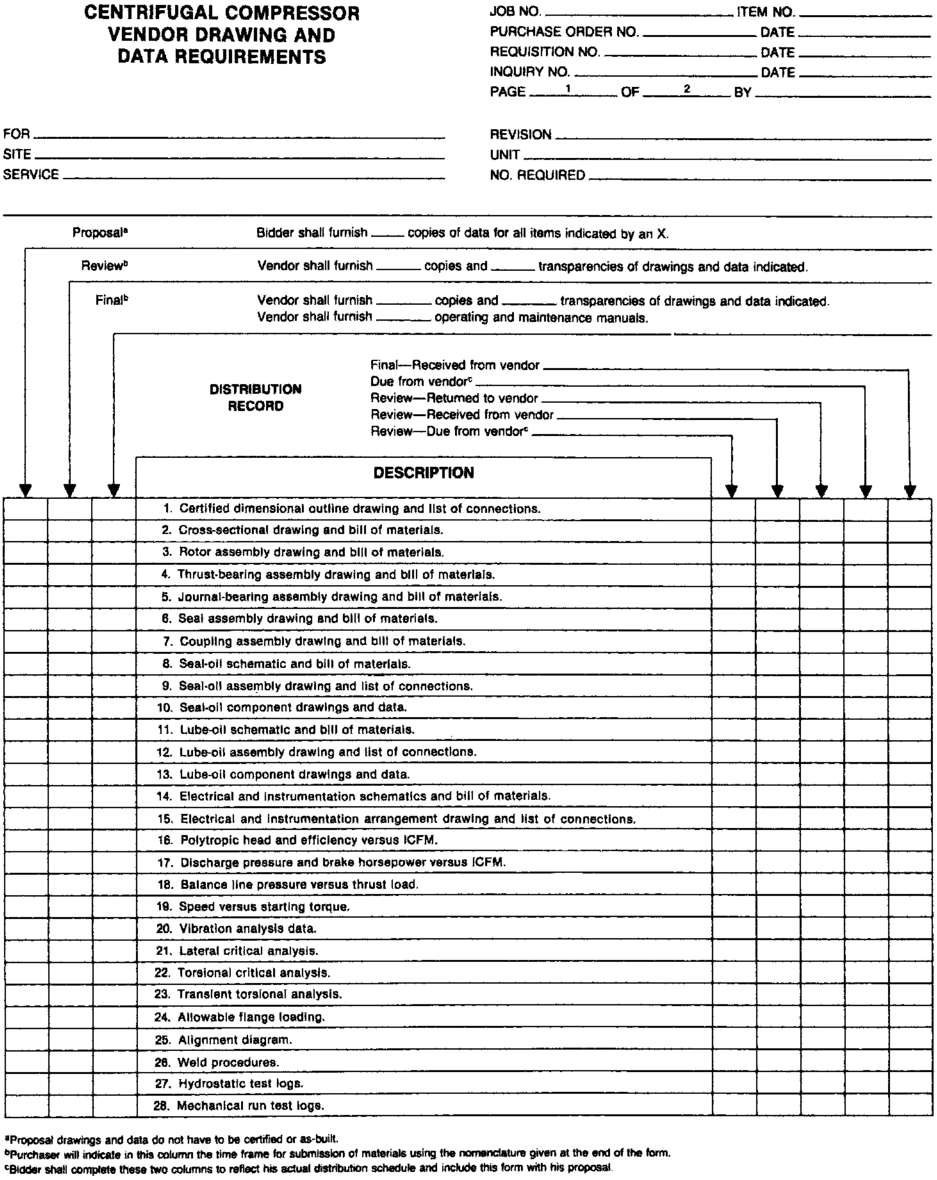

CENTRIFUGAL COMPRESSOR VENDOR DRAWING AND DATA REQUIREMENTS

JOB NO. ______ ITEM NO. ______
PURCHASE ORDER NO. ______ DATE ______
REQUISITION NO. ______ DATE ______
INQUIRY NO. ______ DATE ______
PAGE 1 OF 2 BY ______

FOR ______
SITE ______
SERVICE ______

REVISION ______
UNIT ______
NO. REQUIRED ______

Proposal[a] Bidder shall furnish ____ copies of data for all items indicated by an X.

Review[b] Vendor shall furnish ____ copies and ____ transparencies of drawings and data indicated.

Final[b] Vendor shall furnish ____ copies and ____ transparencies of drawings and data indicated.
Vendor shall furnish ____ operating and maintenance manuals.

DISTRIBUTION RECORD

Final—Received from vendor ______
Due from vendor[c] ______
Review—Returned to vendor ______
Review—Received from vendor ______
Review—Due from vendor[c] ______

			DESCRIPTION					
			1. Certified dimensional outline drawing and list of connections.					
			2. Cross-sectional drawing and bill of materials.					
			3. Rotor assembly drawing and bill of materials.					
			4. Thrust-bearing assembly drawing and bill of materials.					
			5. Journal-bearing assembly drawing and bill of materials.					
			6. Seal assembly drawing and bill of materials.					
			7. Coupling assembly drawing and bill of materials.					
			8. Seal-oil schematic and bill of materials.					
			9. Seal-oil assembly drawing and list of connections.					
			10. Seal-oil component drawings and data.					
			11. Lube-oil schematic and bill of materials.					
			12. Lube-oil assembly drawing and list of connections.					
			13. Lube-oil component drawings and data.					
			14. Electrical and instrumentation schematics and bill of materials.					
			15. Electrical and instrumentation arrangement drawing and list of connections.					
			16. Polytropic head and efficiency versus ICFM.					
			17. Discharge pressure and brake horsepower versus ICFM.					
			18. Balance line pressure versus thrust load.					
			19. Speed versus starting torque.					
			20. Vibration analysis data.					
			21. Lateral critical analysis.					
			22. Torsional critical analysis.					
			23. Transient torsional analysis.					
			24. Allowable flange loading.					
			25. Alignment diagram.					
			26. Weld procedures.					
			27. Hydrostatic test logs.					
			28. Mechanical run test logs.					

[a] Proposal drawings and data do not have to be certified or as-built.
[b] Purchaser will indicate in this column the time frame for submission of materials using the nomenclature given at the end of the form.
[c] Bidder shall complete these two columns to reflect his actual distribution schedule and include this form with his proposal.

FIGURE 20.1 Excerpts of vendor drawing and data requirements from API-617. (*American Petroleum Institute, Washington, D.C.*)

example, automotive air-conditioning compressors would not be included in API coverage. Nevertheless, in the preparation and revision of these standards, consideration is often given to the work of other organizations whose standards are in any way related to similar machinery. Moreover, credit is usually given to all those whose standards may have been helpful in the preparation of a particular issue or edition.

Standards such as those issued by API and NEMA continue to be developed through a voluntary consensus standards development process. This process brings together volunteers

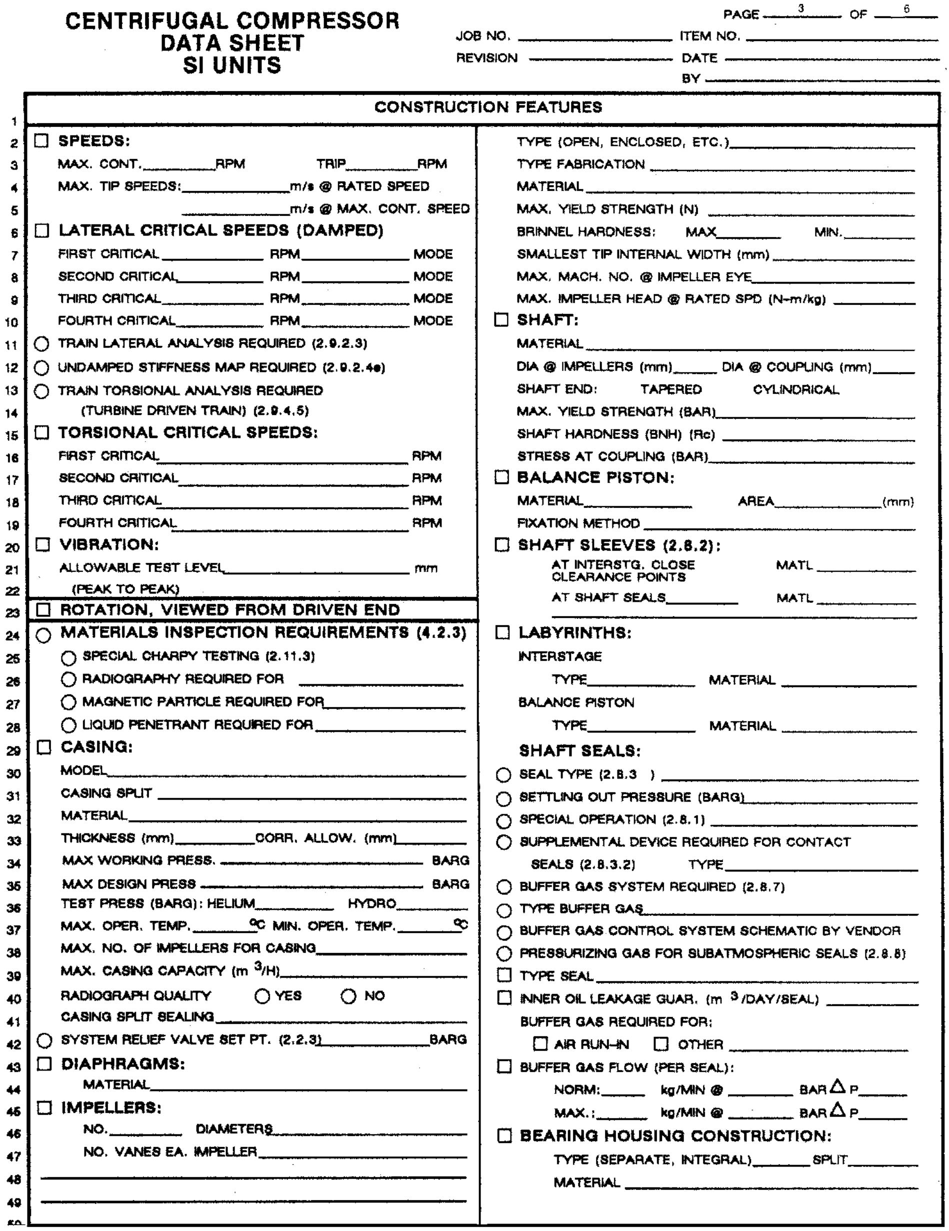

CENTRIFUGAL COMPRESSOR
DATA SHEET
SI UNITS

PAGE 3 OF 6
JOB NO. ____ ITEM NO. ____
REVISION ____ DATE ____
BY ____

CONSTRUCTION FEATURES

☐ **SPEEDS:**
MAX. CONT. ____ RPM TRIP ____ RPM
MAX. TIP SPEEDS: ____ m/s @ RATED SPEED
____ m/s @ MAX. CONT. SPEED
☐ **LATERAL CRITICAL SPEEDS (DAMPED)**
FIRST CRITICAL ____ RPM ____ MODE
SECOND CRITICAL ____ RPM ____ MODE
THIRD CRITICAL ____ RPM ____ MODE
FOURTH CRITICAL ____ RPM ____ MODE
○ TRAIN LATERAL ANALYSIS REQUIRED (2.9.2.3)
○ UNDAMPED STIFFNESS MAP REQUIRED (2.9.2.4e)
○ TRAIN TORSIONAL ANALYSIS REQUIRED
(TURBINE DRIVEN TRAIN) (2.9.4.5)
☐ **TORSIONAL CRITICAL SPEEDS:**
FIRST CRITICAL ____ RPM
SECOND CRITICAL ____ RPM
THIRD CRITICAL ____ RPM
FOURTH CRITICAL ____ RPM
☐ **VIBRATION:**
ALLOWABLE TEST LEVEL ____ mm
(PEAK TO PEAK)
☐ **ROTATION, VIEWED FROM DRIVEN END**
○ **MATERIALS INSPECTION REQUIREMENTS (4.2.3)**
○ SPECIAL CHARPY TESTING (2.11.3)
○ RADIOGRAPHY REQUIRED FOR ____
○ MAGNETIC PARTICLE REQUIRED FOR ____
○ LIQUID PENETRANT REQUIRED FOR ____
☐ **CASING:**
MODEL ____
CASING SPLIT ____
MATERIAL ____
THICKNESS (mm) ____ CORR. ALLOW. (mm) ____
MAX WORKING PRESS. ____ BARG
MAX DESIGN PRESS ____ BARG
TEST PRESS (BARG): HELIUM ____ HYDRO ____
MAX. OPER. TEMP. ____ °C MIN. OPER. TEMP. ____ °C
MAX. NO. OF IMPELLERS FOR CASING ____
MAX. CASING CAPACITY (m^3/H) ____
RADIOGRAPH QUALITY ○ YES ○ NO
CASING SPLIT SEALING ____
○ SYSTEM RELIEF VALVE SET PT. (2.2.3) ____ BARG
☐ **DIAPHRAGMS:**
MATERIAL ____
☐ **IMPELLERS:**
NO. ____ DIAMETERS ____
NO. VANES EA. IMPELLER ____
____
____

TYPE (OPEN, ENCLOSED, ETC.) ____
TYPE FABRICATION ____
MATERIAL ____
MAX. YIELD STRENGTH (N) ____
BRINNEL HARDNESS: MAX ____ MIN. ____
SMALLEST TIP INTERNAL WIDTH (mm) ____
MAX. MACH. NO. @ IMPELLER EYE ____
MAX. IMPELLER HEAD @ RATED SPD (N-m/kg) ____
☐ **SHAFT:**
MATERIAL ____
DIA @ IMPELLERS (mm) ____ DIA @ COUPLING (mm) ____
SHAFT END: TAPERED CYLINDRICAL
MAX. YIELD STRENGTH (BAR) ____
SHAFT HARDNESS (BNH) (Rc) ____
STRESS AT COUPLING (BAR) ____
☐ **BALANCE PISTON:**
MATERIAL ____ AREA ____ (mm)
FIXATION METHOD ____
☐ **SHAFT SLEEVES (2.8.2):**
AT INTERSTG. CLOSE CLEARANCE POINTS MATL ____
AT SHAFT SEALS ____ MATL ____
____
☐ **LABYRINTHS:**
INTERSTAGE
TYPE ____ MATERIAL ____
BALANCE PISTON
TYPE ____ MATERIAL ____
SHAFT SEALS:
○ SEAL TYPE (2.8.3) ____
○ SETTLING OUT PRESSURE (BARG) ____
○ SPECIAL OPERATION (2.8.1) ____
○ SUPPLEMENTAL DEVICE REQUIRED FOR CONTACT
SEALS (2.8.3.2) TYPE ____
○ BUFFER GAS SYSTEM REQUIRED (2.8.7)
○ TYPE BUFFER GAS ____
○ BUFFER GAS CONTROL SYSTEM SCHEMATIC BY VENDOR
○ PRESSURIZING GAS FOR SUBATMOSPHERIC SEALS (2.8.8)
☐ TYPE SEAL ____
☐ INNER OIL LEAKAGE GUAR. (m^3/DAY/SEAL) ____
BUFFER GAS REQUIRED FOR:
☐ AIR RUN-IN ☐ OTHER ____
☐ BUFFER GAS FLOW (PER SEAL):
NORM: ____ kg/MIN @ ____ BAR ΔP ____
MAX.: ____ kg/MIN @ ____ BAR ΔP ____
☐ **BEARING HOUSING CONSTRUCTION:**
TYPE (SEPARATE, INTEGRAL) ____ SPLIT ____
MATERIAL ____

FIGURE 20.2 Typical (partial) data sheet from API-617. (*American Petroleum Institute, Washington, D.C.*)

and/or seeks out the views of persons who have an interest in the topic covered by a given publication. Although API, NEMA and others administer the process and establish rules to promote fairness in the development of consensus, they do not write the document and do not independently test, evaluate, or verify the accuracy or completeness of any information, or the soundness of any judgments contained in its standards and guideline publications.

20.2.2 Disclaimers in Standards

As is to be expected, the information in the standard publication was considered technically sound by the consensus of persons engaged in the development and approval of the document at the time it was developed. But consensus does not necessarily mean that there was unanimous agreement among every person participating in the development of the standards document.

The standards or guidelines presented in an industry standard are assumed technically sound at the time they are approved for publication. Yet they are not a substitute for a product seller's or user's own judgment with respect to the particular product referenced in the standard or guideline, and the issuing authority never guarantees the performance of any individual manufacturer's products by virtue of an industry standard or guide. In fact, entities such as API or NEMA expressly disavow responsibility for damages arising from the use, application, or reliance by others on the information contained in these standards or guidelines.

Understandably, the entity that issues the standard also disclaims liability for any personal injury, property, or other damages of any nature whatsoever, whether special, indirect, consequential, or compensatory, resulting directly or indirectly from the publication, use, application, or reliance on the standard. The issuing entity also disavows claims of guaranty or warranty, expressed or implied, as to the accuracy or completeness of any information published, and disclaims and makes no warranty that the information in the document will fulfill particular purposes or needs.

20.2.3 Going Beyond the Standards

Although logical and understandable in a societal environment where attorneys and legal experts abound, the discussion above should remind us that a good compressor specification must go beyond the various and sundry clauses we are likely to find in an API document. Moreover, the user/purchaser must follow a course of auditing and reviewing the design, manufacture, assembly, shoptesting, and field erection of important compressors.

For as long as official industry standards have been available, but especially since the mid-1960s, reliability-focused companies have seen fit to use supplementary standards and to engage in equipment audits. These user companies have come to recognize that mere compliance with API or other applicable standards is not always sufficient to ensure delivery of optimally configured, low life cycle cost compressors. Up-to-date user experience and special requirements must be spelled out in these supplementary specifications. Referring to Fig. 20.2, note as an arbitrary example how on line 44 a diaphragm material will have to be agreed on by the parties to this sale. A supplementary specification might state "fabricated steel" because this material is more easily repaired than cast iron, and perhaps repairability is of prime concern to a certain user or at a certain plant location. Similarly, elsewhere on this normally 6-page data sheet, a "requester" perhaps asks for variable-speed drivers. Again, the reviewer may know of a supplementary specification that might limit or even disallow their use at a certain plant for technical reasons. In essence, the review process described later is ensuring compliance with supplemental specifications and the special reliability needs of a particular purchaser.

Equipment layout and general assembly drawings are among the indispensable review and documentation requirements. Potential design weaknesses can be discovered in the course of reviewing dimensionally accurate cross-sectional drawings. Examination and review of suitable reference books (among them, Refs. 1 through 4) or other specialized texts will disclose dozens of areas to be questioned.

In general, there are two compelling reasons to conduct this drawing review during the bid evaluation phase of a project: First, some compressor manufacturers may not be able (or willing) to respond to user requests for accurate drawings after the order is placed; second, the design weakness could be significant enough to require extensive redesign. In the latter case, the purchaser may sometimes be better off to select a different compressor model [2].

20.3 DISADVANTAGES OF CHEAP PROCESS COMPRESSORS

It is intuitively evident that purchasing the least expensive machine will rarely be the wisest choice for users wishing to achieve long run times and low or moderate maintenance outlays. Some manufacturers have been accused of marketing “compressors for less” in the expectation of making up for the discrepancy by later selling spare parts with very high profit margins, because they are buying major components from poorly qualified third parties, or because they provide less than desirable inspection coverage at the point of origin.

Although there might be occasions when a company new to the compressor market is able to design and manufacture a better machine than that of an established manufacturer, it is simply not very likely that such newcomers will initially produce a superior product. It would thus be more reasonable, with rare exceptions, to choose from among the most respected *existing* manufacturers (i.e., manufacturers that *currently* enjoy a proven track record).

The first step should therefore to invite only those bidders that meet a number of predefined criteria. The decision as to who should be asked to bid on providing gas compressors for job situations demanding high reliability should take into account the following:

- Acceptable vendors must have experience with the size, pressure, temperature, flow, and service conditions specified.
- Vendors must have proven capability in manufacturing with the metallurgy and fabrication method chosen (e.g., sand casting, fabricated plate, steel with special weld overlay metallurgy).
- Vendor’s “shop loading” must be able to accommodate an order within the required time frame (time to delivery of product).
- Vendors must have implemented satisfactory quality control and must be able to demonstrate a satisfactory on-time delivery history over the past several (usually, two) years.
- If unionized, the vendor must show that there is virtually no risk of labor strife (strikes or work stoppages) while manufacture of particular compressors is in progress.

Since many compressor manufacturers assume that first cost is of paramount importance to the purchaser, their first offer rarely includes all of the features and provisions that best serve a reliability-focused user. As mentioned earlier, it is thus advisable for the owner/purchaser to invoke supplemental specifications. These supplemental specifications are often applied in conjunction with an applicable API specification and amend, delete, or amplify certain API specification clauses.

Whenever such supplementary specifications are being compiled, it is good to keep in mind the following recommendations:

- Specify for low maintenance. Reliability-focused purchasers realize that selective upgrading of certain components will result in rapid payback. (*Note*: Components that are upgrade candidates have been identified in the references given in this book. Be sure to specify those.) Let's cite a simple example: Review failure statistics for principal failure causes. If bearings are prone to failure, realize that the failure cause may be incorrect lube application or lube contamination. Address these failure causes in the specifications.

- Evaluate the vendor response. Allow exceptions to the specification if they are both well explained and valid.
- Clearly document the equipment design; else, future failure analysis and troubleshooting efforts will be greatly impeded. For future repair and troubleshooting work, a plant will certainly require the various equipment cross-section views and other documents. The reviewer should not allow the vendor to claim that these documents are proprietary and that the purchaser is not entitled to them. Therefore, reliability-focused buyers place the vendor under contractual obligation to supply all agreed-upon documents in a predetermined time frame and make it clear that they will withhold 10 or 15% of the total purchase price until all contractual data transmittal requirements have been met.

On critical orders, reliability-focused buyers arrange *contractually* for access to a factory contact. Alternatively, these buyers insist on the nomination of a *management sponsor*, a vice president or director of manufacturing, or a person holding a similar job function at the manufacturer's facility or head offices. The reviewing professional will communicate with this person for redress on issues that could cause impaired quality or delayed delivery.

Following these guidelines will give the best assurance of meeting the expectations of reliability-focused owner–purchasers. But using a well-thought-out review or bid conditioning process, most owner–purchasers are willing to waive an occasional specification requirement if the vendor is able to offer sound engineering reasons. Suffice it to say, only the best-qualified compressor vendors can state their reasons convincingly.

20.4 AUDITS VS. REVIEWS

This overview defines a *machinery reliability audit* as any rigorous analysis of a vendor's overall design after issuance of the purchase order and before beginning equipment fabrication. A *reliability review* is defined as a less formal, ongoing assessment of component or subsystem selection, design, execution, or testing. Machinery reliability *audits* tend to utilize outside resources for brief, concentrated efforts beginning within two months of issuance of the purchase order. On the other hand, reliability *reviews* are typically assigned to one or more experienced machinery engineers who would start being involved in a project from the time specifications are written until the machinery leaves the vendor's shop for shipment to the plant site. In fact, a *review professional* stays with the project throughout the plant startup phase.

In summary, the primary purpose of the *audit effort* is to flush out deep-seated or fundamental design problems on major compressors and drivers. A secondary purpose is to determine which design parameters should be subjected to nonroutine computer analysis and to assist in defining whether follow-up reviews should employ other than routine approaches.

In contrast with the above, the machinery reliability *review effort* is aimed at ensuring compliance with all applicable specifications. These reviews will also judge the acceptability of certain deviations from applicable specifications. Moreover, an experienced reliability review engineer will provide guidance on a host of items, which either could not be, or simply had not been, specified in writing.

20.4.1 Staffing and Timing of Audits and Reviews

Machinery reliability audits as well as reviews can be a tremendously worthwhile investment. They must be performed by experienced engineers and in a well-structured manner. Of course, this presupposes that a perceptive project manager will see to it that the resulting recommendations are, in fact, implemented.

It has been estimated that a medium-sized grass-roots refinery valued at approximately \$1.5 billion (\$1,500,000,000) would optimally staff machinery reliability audits with four engineers for a four-month period and machinery reliability reviews with two engineers for a period of two to three years. The total cost of these efforts would be in the range \$1,800,000 to \$2,400,000. If this sounds like a lot of money, the reader may wish to contrast it with the typical value of a single startup-delay day: amounts in excess of \$600,000 per delay day, millions for two days of unplanned downtime, perhaps accompanied by the thunder of two tall flare stacks for the better portion of two days.

Of course, reliability assurance efforts made before delivery of the machinery are more cost-effective than postdelivery or poststartup endeavors aimed toward the same goals. However, the question remains how to conduct these efforts optimally, how to staff them, and which components or systems to subject to close scrutiny. This is where an analysis of available failure statistics will prove helpful. A review of the failure statistics of rotating machinery used in modern process plants will help determine where the company's money should be spent for the highest probable returns. Moreover, failure statistics [1, 2] can often be used to determine the value of and justification for these efforts.

20.4.2 Use of Equipment Downtime Statistics

Knowledge of failure causes and downtime statistics allows reliability professionals to determine which components merit closer prepurchase review. Also, properly kept records could alert the review engineer to equipment types or models that should be avoided. In some cases, failure statistics might provide key input to a definitive specification. In other words, "you learn from the mistakes of others." All of this presupposes that the others saw fit to record their experiences. If an engineer has these data, available he or she will no doubt use them before selecting machinery.

As of 2005, experienced petrochemical process plants using a conscientious program of mechanical and instrument condition surveillance could achieve eight-year runs on "clean gas" centrifugal process compressors and train availabilities often exceeding 99.5% per year. In best-of-class plants, unscheduled downtime events occur only perhaps once every five years for the average centrifugal compressor train. Recent statistics appear to track those shown in Ref. 1. These statistics show where detailed design reviews might prove profitable.

Rotor and shaft distress rank highest in downtime hours per year per train. Blade or impeller problems rank next, followed by motor failures. Obviously, turbomachinery reliability audits and follow-up reviews should concentrate on these areas first. In relevant texts (e.g., Ref. 2), reciprocating compressor failure events are listed by primary cause, extent of damage, typical repair cost, and average downtime. For important reciprocating compressors, a compelling case can be made for reliability audits and reviews. The user or machinery owner can justify spending many thousands of dollars for this work if the effort results in reduced failure risk.

Again, the reliability review topic is truly vast, and volumes have been written to deal with it. The purpose of including the topic in our book is to give the reader a feel for major machinery reliability audits and reviews. Since centrifugal and reciprocating compressors are representative of dynamic and positive displacement machinery systems, we chose to explain the review concept by highlighting these machines.

20.5 AUDITING AND REVIEWING COMPRESSORS

As mentioned earlier, machinery reliability review engineers should start their assignment at the time the specifications are written, should be deeply involved in the bid review process, and should take an active part in *bid conditioning*. Bid conditioning is a process of making value judgments and of assigning credits or debits to certain design features, performance parameters, service capabilities, deviations from the specifications, and so on. It is during this conditioning process that vendor qualifications and possible extrapolations from past experience should receive close scrutiny.

Deviations or extrapolations from past experience may be the result of the purchaser's specifying certain service conditions, which in turn cause the machinery manufacturer to offer equipment outside prior parameters:

- Pressure rating
- Molecular weight
- Volumetric capacity
- Power rating
- Speed
- Temperature

This, of course, may lead to deviations or extrapolations in the mechanical design area:

- Sealing systems, including packing in reciprocating compressors
- Bearing design and loading
- Number of stages and staging arrangement
- Casing or cylinder size and design
- Casing joint design, reciprocating compressor distance piece configuration, and compartment venting
- Rotor and/or balancing dynamics
- Impeller or piston structural design and performance
- Material selection
- Power transmission component design and arrangement
- Valve materials, valve lift, and gas velocity
- Rotor speed or piston velocity
- Others, according to industry experience and statistics

Note that although these considerations should have influenced the equipment selection, they also merit review after the purchase order has been issued.

There is little difference in how experienced engineers approach and review tasks for various compressors as opposed to turbines, gears, and other machinery. In each case they must obtain drawings and other technical data from equipment vendors. They must then review all pertinent documentation for consistency, safety, compliance with specifications, and so on, and document all areas requiring follow-up.

Compressor documentation requirements probably exceed those of most other machinery with the possible exception of large mechanical-drive steam turbines. Lists of relevant documentation are presented in the appendixes of the various API standards. Using the API tabulation (see Fig. 20.1 for an abbreviated version) facilitates outlining the items recommended for review. The review engineer can use these tabulations to keep track of this work.

The review includes the following but is, of course, not limited to the items listed here:

1. Certified dimensional outline drawing, including:
   a. Journal bearing clearances
   b. Rotor float
   c. Labyrinth, packing, and seal clearances
   d. Axial position of impellers relative to guide vanes
   e. List of connections
   - Journal bearing clearances may be required for rotor sensitivity studies. Bearing dimensions allow rapid calculation of bearing loading and serve to screen the tendency for oil whirl to occur.
   - Labyrinth, packing, and seal clearances may be too tight for normal process operation. The vendor may attempt to show good efficiency (abnormally low recirculation) during shop performance tests.
   - Axial position of impellers relative to guide vanes needs to be reviewed in conjunction with rotor float dimension. Is rubbing contact likely to occur?
   - The list of connections may uncover dimensional mismatching with purchaser's lines, excessive flow velocities, omission of specified injection points, and so on.
2. Cross-sectional drawing and bill of materials
   - These documents are used primarily for verification of impeller dimensions, internal porting, visualization of maintenance access, materials selection, assessment of number of spare parts needed, and so on. A copy of this drawing and the bill of materials should also be forwarded to responsible maintenance personnel.
3. Rotor or cylinder assembly drawing, including:
   a. Axial position from active thrust-collar face to each impeller
   b. Each radial probe
   c. Each journal-bearing centerline
   d. High-pressure side of balance drum
   e. Thrust-collar assembly details, including:
      — Collar-shaft fit with tolerance
      — Concentricity (or runout) tolerance
      — Required torque for locknut
      — Surface finish requirements for collar faces
      — Preheat method and temperature requirements for "shrunk-on" collar installation
   f. Running gear (crankshaft and crosshead) assemblies
   g. Attachment and securing methods for piston rods

   h. Balance drum (or tailrod, in reciprocating compressors) details including:
      - Length of drum
      - Diameter of drum
      - Labyrinth details
   i. Dimensioned shaft end(s) for coupling mounting(s)
   j. Bill of materials
      - Axial position data are required for rotor dynamics analyses and maintenance records. Accurate rotor dynamics studies would further require the submission of weight or mass moment of inertia data for impellers and balance drum.
      - Thrust collar assembly details are to be analyzed for nonfretting engagement and feasibility of field maintenance. Hydraulic fit is preferred.
      - Balance drum details are needed for rotor dynamics analyses and maintenance reviews.
      - Dimensioned shaft ends for coupling mountings allow calculation of stress levels, margins of safety, uprateability, and coupling maintenance.
      - The bill of materials is again used for comparison of component designs and materials being released for fabrication. Again, the bill of materials will allow definition of spare parts requirements.

4. Thrust-bearing assembly drawing and bill of materials
   - These are used to verify thrust bearing size and capacity. They are important if directed oil spray lubrication has been specified. They contain essential maintenance information.
5. Journal-bearing assembly drawing and bill of materials
   - Bearing dimensions are required for calculation of bearing loading, rotor dynamic behavior, and maintenance records.
6. Seal assembly drawing and bill of materials
   - These are required to compare seal dimensions, clearances, and tolerances with similar data from seals operating properly under essentially identical operating conditions.
7. Coupling assembly drawing and bill of materials
   - These are used for calculations verifying load-carrying capacity, mass moment of inertia, overhung weight, shaft-fit criteria, dimensional compatibility between driver and driven equipment, material selection, match marking, assembly and disassembly provisions, and review of spare parts availability.
8. Seal oil (or cylinder lubrication, in reciprocating compressors) schematic, including:
   a. Steady-state and transient oil flows and pressures
   b. Control, alarm, and trip settings
   c. Heat loads
   d. Utility requirements, including electrical, water, and air
   e. Pipe and valve sizes
   f. Bill of materials

It should also be noted that:

- Oil flows and pressures must change as a function of gas pressure and compressor speed changes. The review must verify that the seal oil supply can accommodate

  all requirements anticipated for a given compressor. This would include operation during run-in on air.
  - Control, alarm, and trip settings are required for operating and maintenance manuals as well as for initial field implementation by the contractor.
  - Heat loads are required for capacity checks on oil coolers.
  - Utilities requirements are required for proper sizing of switchgear, steam lines, and so on.
  - Pipe and valve size are employed in calculations, verifying that maximum acceptable flow velocities are not exceeded.

9. Seal oil assembly drawing and list of connections
   - These are required for the contractor's (purchaser's) connecting design.
10. Seal oil component drawings and data, including:
    a. Pumps and drivers
       (1) Certified dimensional outline drawing
       (2) Cross section and bill of materials
       (3) Mechanical seal drawing and bill of materials
       (4) Priced spare parts list and recommendations
       (5) Instruction and operating manuals
       (6) Completed data forms for pumps and drivers
    b. Overhead tank (or cylinder lubricator in reciprocating compressors), reservoir, and drain tanks
       (1) Fabrication drawings
       (2) Maximum, minimum, and normal liquid levels
       (3) Design calculations and capacity and retention data
    c. Coolers and filters
       (1) Fabrication drawings
       (2) Priced spare parts list and recommendations
       (3) Completed data form for cooler(s)
    d. Instrumentation
       (1) Controllers
       (2) Switches
       (3) Control valves
       (4) Gauges
    - Pumps and drivers are reviewed for accessibility, coupling arrangements, baseplace mounting method, proximity of discharge and suction pipe, and so on.
    - Overhead tank, main reservoir, and drain tanks (e.g., degassing tank, sour seal oil reservoir) must comply with specifications. Should overhead tanks be given thermal insulation?
    - Coolers must be suitable for *heating* the seal oil during oil flushing operations. Are they sized to cool the oil flow resulting from more than one pump operation? Can filters be fully drained? Do they have vent provisions? What is their collapsing pressure? What types of cartridges do they accept? Specification compliance must be ascertained.

- Is instrumentation accessible? Can it be checked, calibrated, or replaced without causing a shutdown? Is it identified properly? Are controllers and transmitters located at optimum locations for rapid sensing and control? Are switches of sound design, and are they manufactured by a reputable company? Are control valves sized properly? Are gauges made of acceptable metallurgy? Are the ranges correct?

11. Lube-oil schematic, including:
    a. Steady-state and transient oil flows and pressures
    b. Control, alarm, and trip settings
    c. Heat loads
    d. Utility requirements, including electrical, water, air, steam, and nitrogen
    e. Pipe and valve sizes
    f. Bill of materials
    - Are steady-state and transient flows within the capability of the pumps and accumulator? Will the pumps and accumulators satisfy the driver hydraulic transients? Is the accumulator maintainable?
    - Have the control, alarm, and trip settings been tabulated?
    - Must the heat loads be accommodated by fouled coolers?
    - The utility requirements are needed to allow plant design to proceed in such areas as electrical protective devices, water supply lines, and nitrogen supply for blanketing of the reservoir. Identify the steam requirements for turbine-driven pumps.
    - The pipe and valve sizes need to be checked to determine an acceptable flow velocity.
    - The bill of materials should be reviewed to identify inexpensive or difficult-to-components. It should also be reviewed by maintenance personnel. Are O-rings, rolling element bearings, and so on, identified so as to allow purchase from the *actual* manufacturers of these components?
12. Lube oil assembly drawing and list of connections
    - These are required for contractor's (purchaser's) connecting design.
13. Lube-oil component drawings and data, including:
    a. Pumps and drivers
        (1) Certified dimensional outline drawing
        (2) Cross section and bill of materials
        (3) Mechanical seal drawing and bill of materials
        (4) Performance curves for centrifugal pumps
        (5) Priced spare parts list and recommendations
        (6) Instruction and operating manuals
        (7) Completed data forms for pumps and drivers
    b. Coolers, filters, and reservoir
        (1) Fabrication drawings
        (2) Maximum, minimum, and normal liquid levels in reservoir
        (3) Completed data form for cooler(s)
        (4) Priced spare parts list and recommendations

c. Instrumentation
   (1) Controllers
   (2) Switches
   (3) Control valves
   (4) Gauges

- Refer to item 10. The same reviews are necessary here. Note that performance curves are required whenever pumps are involved, regardless of whether they are of the centrifugal or positive displacement (screw) type. Positive displacement pumps undergo "slippage," which varies with the viscosity of the pumped fluid.
- Instruction and operating manuals are intended for future incorporation in owners' mechanical procedures and conventional plant operating manuals.

14. Electrical and instrumentation schematics and bill of materials
    - Machinery review engineers should be given responsibility for obtaining these data and forwarding them to the engineer's electrical/instrument engineering counterparts for review and comment.
15. Electrical and instrumentation arrangement drawing and list of connections
    - Same as above. At the completion of reviews by electrical/instrument engineering personnel, the final arrangement will be implemented by the contractor.
16. Polytropic head and polytropic efficiency vs. icfm curves for each section or casing on multiple section or casing units in addition to composite curves at 80, 90, 100, and 105% of rated speed
    - On reciprocating compressors, request detailed information on compressor unloading (i.e., operation with partial load).
    - For dynamic compressors, request information on probable location of surge lines for various molecular-weight gases, as required. These are important data for future uprate and general performance verification studies. These can be used for the purchaser's check on the vendor's predicted performance.
17. Discharge pressure and brake horsepower vs. icfm curves at rated conditions for each section or casing on multiple-section or multiple-casing units in addition to composite curves at 80, 90, 100, and 105% of rated speed
    - For variable molecular-weight (MW) gases, curves must also be furnished at maximum and minimum MW. For air compressors, curves must also be furnished at three additional specified inlet temperatures.
18. "Pressure above suction pressure behind the balance drum" vs. "unit loading of the thrust shoes," both in psi (bar), using rated conditions as the curve basis
    - The curve extends from a pressure equal to suction pressure behind the drum to one corresponding to at least 500 psi (~35 bar) unit loading on the thrust shoes. Balance drum OD, effective balance drum area, and expected and maximum recommended allowable pressure behind the balance drum are shown on the curve sheet.
    - Will balance drum labyrinth wear cause overloading of the thrust bearing? What happens when fouling (polymerization) occurs in the balance line? Is the design safe for a wide range of suction pressures?

19. Speed vs. starting torque curve
    - Will the motor be designed to start the compressor safely? (This is even more important for gas turbine drivers!)
20. Vibration analysis data, including:
    a. Number of vanes (each impeller)
    b. Number of vanes (each guide vane)
    c. Number of teeth (gear-type couplings)
    - These data, required for machine signature real-time online diagnostic or spectrum analysis, will allow identification of relevant frequencies, possibly useful in determining which component has undergone deterioration. Refer also to the illustrative example in Fig. 20.3. The review engineer should ensure that pertinent data are provided in this combination tabular and pictorial form.

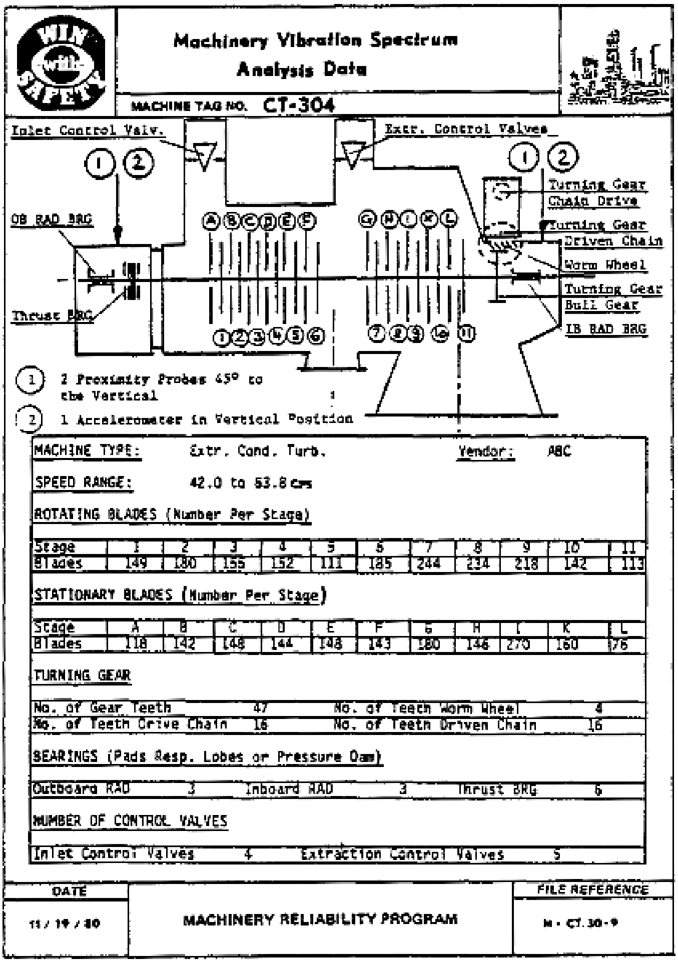

Machinery Vibration Spectrum Analysis Data

MACHINE TAG NO. CT-304

① 2 Proximity Probes 45° to the Vertical

② 1 Accelerometer in Vertical Position

MACHINE TYPE: Extr. Cond. Turb. Vendor: ABC

SPEED RANGE: 42.0 to 53.8 cps

ROTATING BLADES (Number Per Stage)

Stage	1	2	3	4	5	6	7	8	9	10	11
Blades	149	180	155	152	111	185	244	234	218	142	113

STATIONARY BLADES (Number Per Stage)

Stage	A	B	C	D	E	F	G	H	I	K	L
Blades	118	142	148	144	148	143	180	146	270	160	76

TURNING GEAR

No. of Gear Teeth	47	No. of Teeth Worm Wheel	4
No. of Teeth Drive Chain	16	No. of Teeth Driven Chain	16

BEARINGS (Pads Resp. Lobes or Pressure Dam)

Outboard RAD	3	Inboard RAD	3	Thrust BRG	6

NUMBER OF CONTROL VALVES

Inlet Control Valves	4	Extraction Control Valves	5

DATE		FILE REFERENCE
11 / 19 / 80	MACHINERY RELIABILITY PROGRAM	M - CT.30-9

FIGURE 20.3 A simple sketch showing that the number of blades in a given stage, or teeth per gear, may allow linking vibration frequencies to a specific blade row, or a particular gear. (Source: Bloch, Heinz P., *Improving Machinery Reliability*, 3rd Edition, 1998, Gulf Publishing Company, Houston, TX.)

21. Rotor dynamic analyses, including:
    a. Method used
    b. Graphic display of bearing and support stiffness and its effect on critical speeds
    c. Graphic display of rotor response to unbalance
    d. Graphic display of overhung moment and its effect on critical speed
    e. Graphic display of rotor stability
    - Reviews will identify if there is a risk of operating too close to critical speed or if the rotor is likely to vibrate excessively even at slight unbalance. If gear couplings are used, the effective (instantaneous) overhung moment may change as a function of tooth loading or tooth friction. The probability of encountering critical speed problems as a function of gear coupling deterioration can be investigated by examining graphic displays of effective overhung moment vs. critical speed.
    - Turbomachinery vendors must provide an accurate mathematical model of the rotor system before they will be able to proceed with their calculations of lateral critical speeds. This model must consider each significant shaft section length and diameter. Also, all concentrated masses and their inertias must be included and the effective stiffness and damping at the bearings must be represented as accurately as possible. The effective stiffness is influenced by oil film characteristics, bearing housing and pedestal configuration, and foundation features.
    - Rotor instabilities can occur when rotors operate above the first critical speed in support systems with low effective damping. The resulting vibration often shows up at subsynchronous frequencies and can cause serious damage without adequate warning. A good design should indicate stable well-damped operation at speeds and gas loads representative of some future, uprated design or operating condition.
22. Torsional critical speed analysis for all motor and gear units, including:
    a. Method used
    b. Graphic display of mass-elastic system
    c. Tabulation identifying the mass moment torsional stiffness for each component in the mass elastic system
    d. Graphic display of exciting sources (e.g., revolutions per minute of any gear in the train)
    e. Graphic display of torsional critical speeds and deflections (mode shape diagrams)
    - Torsional critical speeds coinciding with the running speeds of rotating elements in a turbine–gear–compressor or motor–gear–compressor train can cause oscillatory forces of such magnitude as to shorten component life drastically. The data listed are required to determine the probability of speed coincidence, and should coincidence exist, will allow calculation of resulting stresses. Purchasers may opt to duplicate the manufacturer's torsional analysis with in-house or outside resources. Alternatively, they may arrange for a field test of actual torsional stresses.
23. Transient torsional analysis for all synchronous motor-driven units
    - Transient, momentary torsional stresses on synchronous motors can be extremely severe and have been responsible for a number of catastrophic failures. Vendors should submit their analysis for review by the purchasers or their consultants.

24. Allowable flange loading is not to be exceeded by piping forces and moments. These forces and moments can be calculated readily by computers, and virtually all contractors now employ this analysis tool. Correctly used, it will ensure that equipment flange loadings remain within acceptable limits not only under all foreseeable operating conditions, but also while spare equipment connected to the same piping system is temporarily removed for maintenance.
25. An alignment diagram, including recommended limits during operation
    - Cold alignment offset calculations are to be reviewed for accuracy and appropriateness of manufacturers' assumptions. These data are then used for initial cold alignments (via reverse indicator readings).
26. Weld procedure
    - These procedures are commonly reviewed by purchasers' metallurgy specialists. Improper procedures have been responsible for commissioning delays and serious failures. A review of weld procedures can encompass piping, vessels, machinery casings, and even fan blade spares.
27. Hydrostatic test logs
    - Together with weld procedures, hydrostatic test logs should become part of the inspection record system of modern process plants.
28. Mechanical run test logs, including:
    a. Oil flows and temperatures
    b. Vibration
    c. Bearing metal temperatures
    d. Actual critical speeds
    - These test logs should provide verification for all predicted values. If audits and reviews have been conducted properly, the mechanical run tests will, at best, uncover vendor quality control errors. Deep-seated design errors should not surface at this stage in the job execution.
    - The mechanical run test can provide typical target values for comparison with initial field operation of major machinery. These logs should be retained for future reference.
29. Rotor balance logs
    - Rotor balance target values given by manufacturers can be compared with typical values quoted in the literature. Figure 3 shows a typical comparison chart. Rotor balance logs should also be retained in purchasers' equipment records.
30. Rotor mechanical and electrical runout
    - Maximum acceptable mechanical runout values are specified in the API standards.
31. As-built data sheets
    - As-built data sheets or schematics indicating critical dimensions are key ingredients of a machinery turnaround records system. The merits of cataloging these essential data are self-evident. Observation and determination of wear is important for failure analysis, and as-built data sheets provide a record of materials used in equipment fabrication. Furthermore, these sheets allow both determination and restoration of amounts worn off.

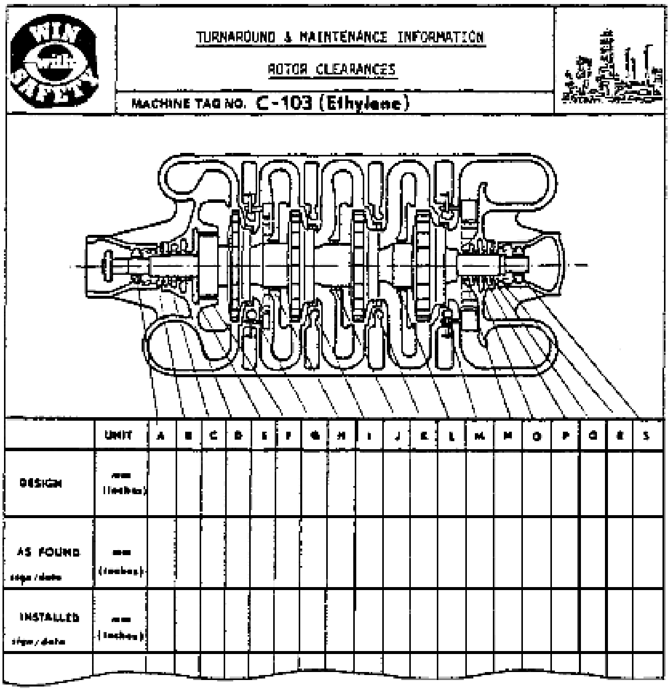

	UNIT	A	B	C	D	E	F	G	H	I	J	K	L	M	N	O	P	Q	R	S
DESIGN	mm (inches)																			
AS FOUND sign/date	mm (inches)																			
INSTALLED sign/date	mm (inches)																			

FIGURE 20.4 Using a "machine sketch" and recording clearance data prove helpful in monitoring component wear. (Source: Bloch, Heinz P., *Improving Machinery Reliability*, 3rd Edition, 1998, Gulf Publishing Company, Houston, TX.)

32. As-built dimensions and data
    - Review engineers have the responsibility of retrieving these data in a form that is useful to plant maintenance and technical departments. It is most helpful to let manufacturers provide the data both tabular and pictorially, as shown in Fig. 20.4.

    a. Shaft or sleeve diameters at:
        (1) Thrust collar
        (2) Each seal component
        (3) Each impeller
        (4) Each interstage labyrinth
        (5) Each journal bearing
    b. Each impeller bore
    c. Each labyrinth bore
    d. Each bushing seal component
    e. Each journal-bearing ID
    f. Thrust-bearing concentricity
    g. Metallurgy and heat treatment for:
        (1) Shafts
        (2) Impellers

   (3) Thrust collars
   (4) Hardness readings when H_2S is present

- Typical wear parts, or parts typically destroyed by massive equipment failures, are listed as items a through f. Metallurgy and heat treatment of highly stressed parts coming in contact with H_2S are important if failure due to stress corrosion cracking is to be avoided (g).

33. Operating and maintenance manuals

- Manuals must be furnished describing installation, operation, and maintenance procedures. Each manual includes the following sections:

Section 1—Installation

a. Storage instructions
b. Foundation
c. Grouting
d. Setting equipment, rigging procedures, and component weights
e. Alignment
f. Piping recommendations
g. Composite outline drawing for compressor train, including anchor-bolt locations

- Although used primarily for installation guidance, Section 1 contains information that should go into purchasers' construction record systems.

Section 2—Operation

a. Startup
b. Normal shutdown
c. Emergency shutdown
d. Operating limits
e. Routine operational procedures
f. Lube and seal oil recommendations

- Section 2 contains information that purchasers' machinery engineers should utilize in developing such comprehensive machinery instructions as lube and seal oil flushing and checkout procedures, compressor air, helium or vacuum run-in instructions, compressor process runs, and compressor field performance runs. A typical page from this instruction section is shown in Fig. 20.5.

Section 3—Disassembly and Reassembly Instructions

a. Rotor in casing
b. Rotor unstacking and restacking procedures
c. Journal bearings
d. Thrust bearings
e. Seals
f. Thrust collars

- These instructions are indispensable for field maintenance. They should preferably go into a mechanical procedures or turnaround manual. Close screening of these instructions may reveal special tooling or shop facilities requirements.

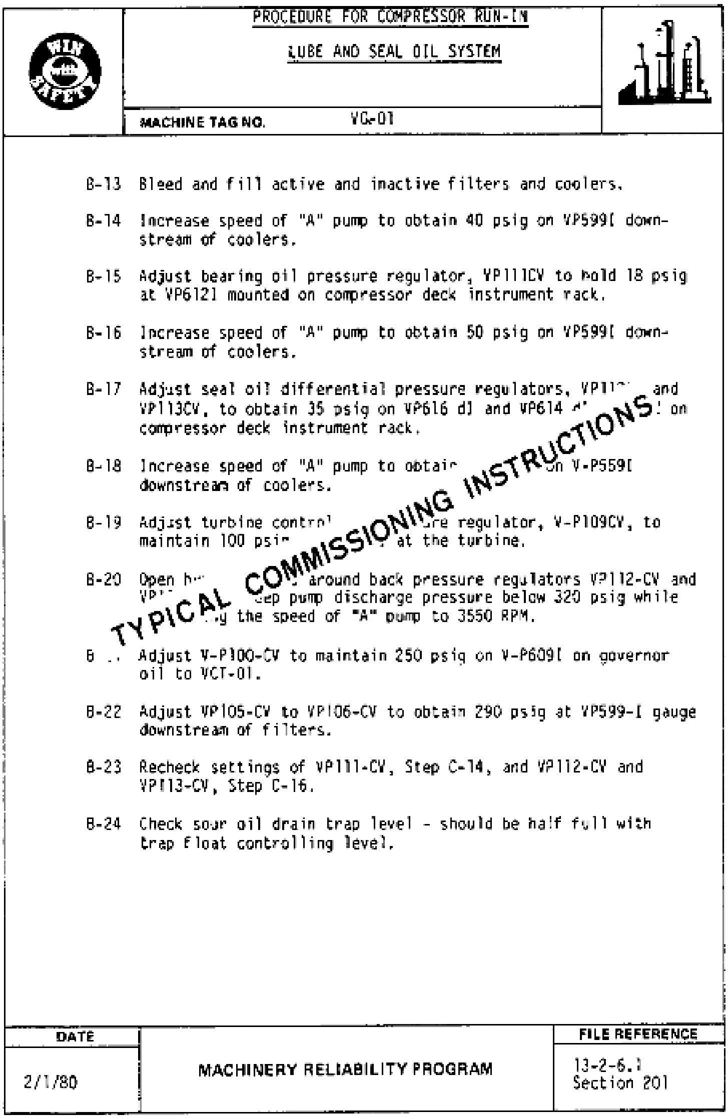

PROCEDURE FOR COMPRESSOR RUN-IN

LUBE AND SEAL OIL SYSTEM

MACHINE TAG NO. VG-01

B-13 Bleed and fill active and inactive filters and coolers.

B-14 Increase speed of "A" pump to obtain 40 psig on VP599I downstream of coolers.

B-15 Adjust bearing oil pressure regulator, VP111CV to hold 18 psig at VP612I mounted on compressor deck instrument rack.

B-16 Increase speed of "A" pump to obtain 50 psig on VP599I downstream of coolers.

B-17 Adjust seal oil differential pressure regulators, VP11[illegible] and VP113CV, to obtain 35 psig on VP616 dI and VP614 [illegible] on compressor deck instrument rack.

B-18 Increase speed of "A" pump to obtai[illegible] on V-P559I downstream of coolers.

B-19 Adjust turbine contr[illegible]ure regulator, V-P109CV, to maintain 100 psi[illegible] at the turbine.

B-20 Open b[illegible] around back pressure regulators VP112-CV and VP1[illegible]ep pump discharge pressure below 320 psig while [illegible]g the speed of "A" pump to 3550 RPM.

B[illegible] Adjust V-P100-CV to maintain 250 psig on V-P609I on governor oil to VCT-01.

B-22 Adjust VP105-CV to VP106-CV to obtain 290 psig at VP599-I gauge downstream of filters.

B-23 Recheck settings of VP111-CV, Step C-14, and VP112-CV and VP113-CV, Step C-16.

B-24 Check sour oil drain trap level - should be half full with trap float controlling level.

TYPICAL COMMISSIONING INSTRUCTIONS

DATE		FILE REFERENCE
2/1/80	MACHINERY RELIABILITY PROGRAM	13-2-6.1 Section 201

FIGURE 20.5 Detailed commissioning instructions and written operating procedures are valuable aids in reducing human error. (Source: Bloch, Heinz P., *Improving Machinery Reliability*, 3rd Edition, 1998, Gulf Publishing Company, Houston, TX.)

These instructions should make liberal use of photographs and sketches and should, if possible, give the number of labor-hours needed to accomplish a task. Refer to Figs. 20.6 and 20.7 for typical pages.

Section 4—Performance Curves

a. Polytropic head and polytropic efficiency vs. icfm
b. Discharge pressure and brake horsepower vs. icfm
c. Balance drum pressure vs. thrust loading
d. Speed vs. starting torque

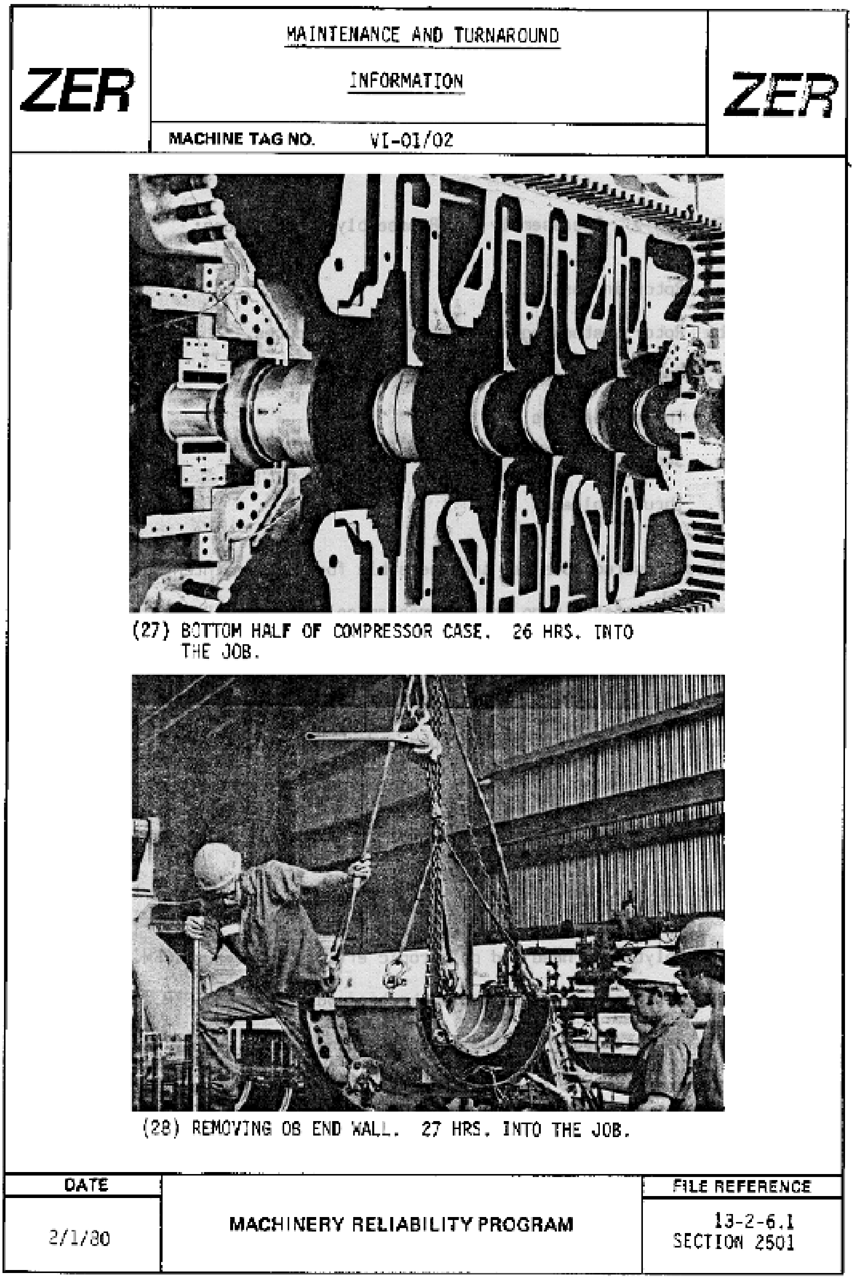

ZER

MAINTENANCE AND TURNAROUND INFORMATION

ZER

MACHINE TAG NO. VI-01/02

(27) BOTTOM HALF OF COMPRESSOR CASE. 26 HRS. INTO THE JOB.

(28) REMOVING OB END WALL. 27 HRS. INTO THE JOB.

DATE		FILE REFERENCE
2/1/80	MACHINERY RELIABILITY PROGRAM	13-2-6.1 SECTION 2501

FIGURE 20.6 Best-in-class companies rely on picture sequences when performing maintenance and turnaround activities on large or critically important machinery. (Source: Bloch, Heinz P., *Improving Machinery Reliability*, 3rd Edition, 1998, Gulf Publishing Company, Houston, TX.)

- Performance curves allow us to review probable vs. actual surge limits, probable uprate capabilities of major machinery, and maximum permissible balance line fouling before the onset of thrust bearing distress. The speed vs. starting torque characteristic curves are important for driver sizing.

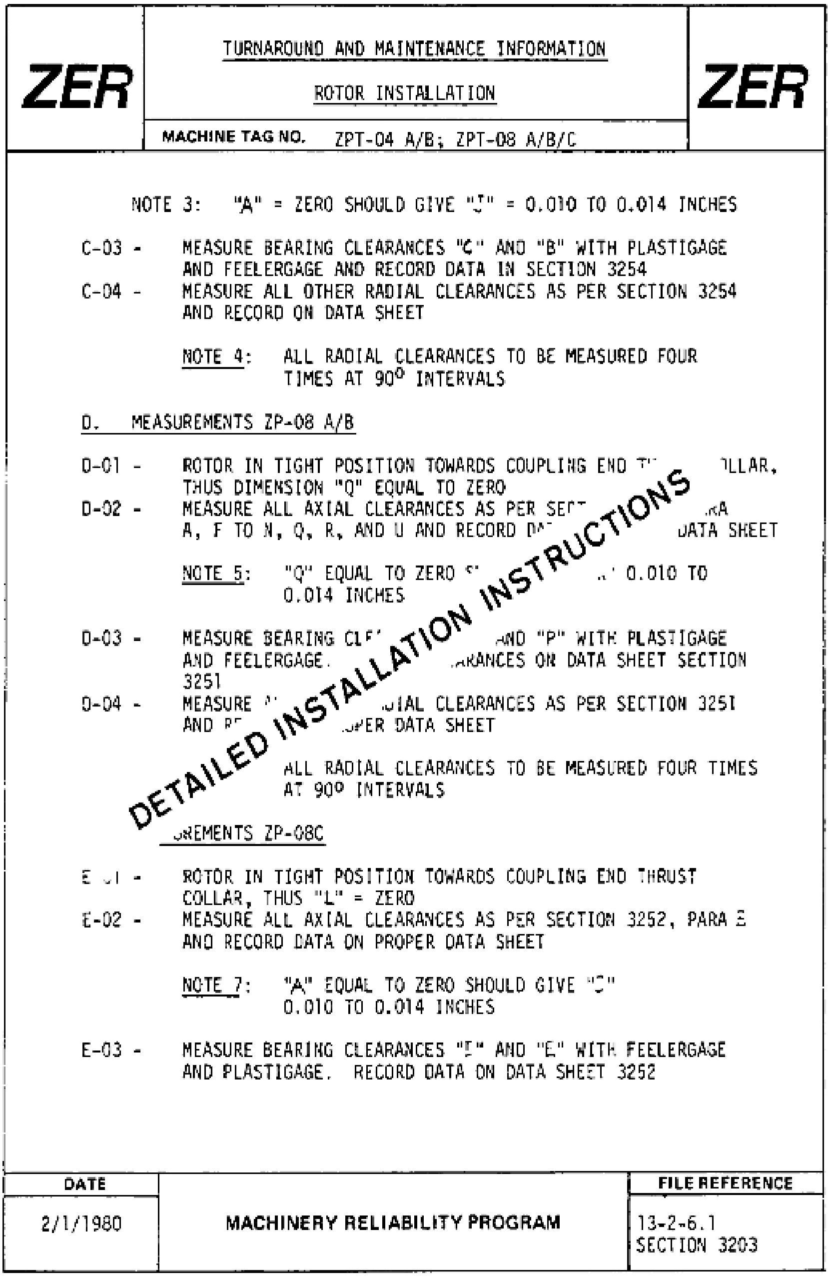

ZER

TURNAROUND AND MAINTENANCE INFORMATION

ROTOR INSTALLATION

ZER

MACHINE TAG NO. ZPT-04 A/B; ZPT-08 A/B/C

NOTE 3: "A" = ZERO SHOULD GIVE "J" = 0.010 TO 0.014 INCHES

C-03 - MEASURE BEARING CLEARANCES "C" AND "B" WITH PLASTIGAGE AND FEELERGAGE AND RECORD DATA IN SECTION 3254

C-04 - MEASURE ALL OTHER RADIAL CLEARANCES AS PER SECTION 3254 AND RECORD ON DATA SHEET

NOTE 4: ALL RADIAL CLEARANCES TO BE MEASURED FOUR TIMES AT 90° INTERVALS

D. MEASUREMENTS ZP-08 A/B

D-01 - ROTOR IN TIGHT POSITION TOWARDS COUPLING END T LLAR, THUS DIMENSION "Q" EQUAL TO ZERO

D-02 - MEASURE ALL AXIAL CLEARANCES AS PER SEC A A, F TO N, Q, R, AND U AND RECORD D DATA SHEET

NOTE 5: "Q" EQUAL TO ZERO 0.010 TO 0.014 INCHES

D-03 - MEASURE BEARING CL AND "P" WITH PLASTIGAGE AND FEELERGAGE. ANCES ON DATA SHEET SECTION 3251

D-04 - MEASURE IAL CLEARANCES AS PER SECTION 3251 AND ER DATA SHEET

ALL RADIAL CLEARANCES TO BE MEASURED FOUR TIMES AT 90° INTERVALS

REMENTS ZP-08C

E - ROTOR IN TIGHT POSITION TOWARDS COUPLING END THRUST COLLAR, THUS "L" = ZERO

E-02 - MEASURE ALL AXIAL CLEARANCES AS PER SECTION 3252, PARA E AND RECORD DATA ON PROPER DATA SHEET

NOTE 7: "A" EQUAL TO ZERO SHOULD GIVE "J" 0.010 TO 0.014 INCHES

E-03 - MEASURE BEARING CLEARANCES "I" AND "E" WITH FEELERGAGE AND PLASTIGAGE. RECORD DATA ON DATA SHEET 3252

DATE		FILE REFERENCE
2/1/1980	**MACHINERY RELIABILITY PROGRAM**	13-2-6.1 SECTION 3203

FIGURE 20.7 Detailed installation instructions tend to decrease failure risk and increase machinery uptime. (Source: Bloch, Heinz P., *Improving Machinery Reliability*, 3rd Edition, 1998, Gulf Publishing Company, Houston, TX.)

Section 5—Vibration Data

a. Vibration analysis data
b. Lateral critical speed analysis
c. Torsional critical speed analysis
d. Transient torsional analysis

- Vibration data submitted previously by the vendor are updated, supplemented, or simply included in their original form for the purpose of having official data in a single manual.

Section 6—As-Built Data

a. As-built data sheets
b. As-built dimensions and data
c. Hydrostatic test logs
d. Mechanical run test logs
e. Rotor balance logs
f. Rotor mechanical and electrical runout

- As above, a comprehensive, final updated issue.

Section 7—Drawing and Data Requirements

a. Certified dimensional outline drawing and list of connections
b. Cross-sectional drawing and bill of materials
c. Rotor drawing and bill of materials
d. Thrust-bearing assembly drawing and bill of materials
e. Journal-bearing assembly drawing and bill of materials
f. Seal assembly drawing and bill of materials
g. Seal oil schematic and bill of materials
h. Seal oil arrangement drawing and list of connections
i. Seal oil component drawings and data
j. Lube oil schematic and bill of materials
k. Lube oil arrangement drawing and list of connections
l. Lube oil component drawings and data
m. Electrical and instrumentation schematics and bill of materials
n. Electrical and instrumentation arrangement drawing and list of connections

- Again, a final wrap-up of certified drawings for purchasers' permanent records.

Vendors usually issue official operating and maintenance manuals around the time completed machines leave their factories. Although this may be an acceptable timetable in view of the fact that all of these data had previously been made available to purchasers or their contractors, any delay in the *originally* scheduled transmission of essential documents may have a serious impact on the completion of construction and therefore on machinery startup targets. To forestall any such delays, project managers would be well advised to link progress payments to the timely and diligent execution of all data transmittal requirements. Once full payment has been made while certain review documents are outstanding, purchasers lose virtually all their leverage and may not be able to proceed with critically important review or audit efforts.

20.6 COMPRESSOR INSPECTION: EXTENSION OF THE AUDIT EFFORT

In the late 1990s and early 2000s, most plants underwent workforce reductions. They have downsized and "right-sized," delegated work to contractors and subcontractors, and gone offshore for labor and materials. Quality control has often suffered in the process; indeed, one of the first job functions to be curtailed or deleted is often the quality control or inspection department.

Of course, delivering a defect-free compressor is acknowledged to be the responsibility of the manufacturer. If the product is delivered with flaws and assuming that these flaws are detected within the warranty period, the manufacturer will implement and pay for repairs. However, the compressor user–owner facility is not being compensated for downtime expenses unless it happens to have (very unusual) zero-deductible insurance coverage for business interruptions. Yet in that particular and certainly rare case, insurance premiums would be exceedingly high.

It follows that arranging for inspection coverage by a firm's own inspectors or by a contract inspection agency is often to the advantage of the purchaser. Unfortunately, neither scope nor required thoroughness of inspection coverage are always appreciated by parties representing the owner. Experience shows that both inspection scope and thoroughness must be predefined and sometimes, negotiated. Although it is certainly not our purpose in this book to give detailed guidance on *all* the elements to be inspected, examining the inspection coverage of a welded impeller and preexisting rotor will serve as an example and will be of help.

The owner's *inspector* function may be outsourced to an experienced inspection company. However, the owner's *engineer* should be a competent person whose involvement in the project started with equipment specification, bid review, and selection. From there, his or her involvement progresses to lead roles in the audit and review process, moving on to field erection, plant startup, and a year or so with the owner's plant. One cannot overlook certain inspection requirements if one claims to be truly reliability focused.

The following example is presented simply for the purpose of illustrating the great degree of detail with which the inspection of compressor components and subassemblies is to be conducted. Our example assumes that an existing machine is being revamped, or uprated. These guidelines can be used to question, challenge, or understand when a service provider or manufacturer deviates from the methods or work procedures. Of course, this questioning process may actually lead to valid explanations that allow you to accept a deviation from past ways of doing things. Similarly, it may lead to insistence that "our way is the less risky way," in which case you will be pleased to have this guidance at your fingertips.

20.6.1 Inspection of a Welded Impeller (Wheel) and the Entire Rotor

Suppose that we were dealing with a compressor designed to operate in a refinery process gas environment. In that case, the owner's inspector (or agency inspector reporting to the owner's machinery engineer) should inspect the following:

- Disassembly (unstacking) of the (in this case, already existing) rotors
- Reconditioning and certification of the shaft
- Reconditioning and certification of (insert number, but assume several in this illustrative example) previously used impellers
- Fabrication and certification of (insert number, but again assume several in this illustrative example) new impellers
- Restacking and certification of the modified rotor

Specific guidelines and areas of concern typically include the activities described below.

Unstacking This entails the removal of impellers from the shaft. If prior experience shows that careless unstacking procedures at the manufacturer's facility had, on other occasions, caused extreme deformation of impeller bores, point this out[3]. After all, we wish to avoid repetition of this problem. Therefore:

1. Determine if the centrifugal rotor assembly is made with uniform shrink fits (typically, 0.00075 to 0.0015 in./in. of shaft diameter). This requires impeller heating or, in extreme cases, a combination process of heating the impeller and cooling the shaft
2. The shrink fits are generally calculated to be released when the impeller is heated to 600°F maximum. To exceed this figure on materials other than AISI 410 or AISI 4140 could result in metallurgical changes in the wheel. For a reliability-focused owner's impellers (AISI 4140), allow a maximum temperature of 400°F. Tempil sticks should be used to ensure that this is not exceeded. The entire diameter of an impeller must be heated uniformly using "rosebud" tips—two or more at the same time.
3. The important thing to remember when removing impellers is that the heat must be applied quickly to the rim section first and after it has been heated, to the hub section, starting at the outside. Never apply heat toward the bore with the remainder of the impeller cool.
4. To disassemble rotors, the parts should be marked carefully as taken apart so that identical parts can be replaced in the proper position. A sketch of rotor component position should be made using the thrust collar or shoulder to adjacent impeller hub exit area. Measure and record the distance between all impellers. Each impeller should be stenciled. From the thrust end, the first impeller should be stenciled T-1; the second wheel, T-2; and so on. If working from the coupling end, stencil the first wheel C-1; the second wheel, C-2; and so on. This requirement would not be significant in a re-rate job, where only some of the impellers are being reused. However, there *is* a possibility that after unstacking, the owner might experience an emergency and would ask for the rotor to quickly be restacked and shipped back to the plant site.

   Following the prescribed marking procedure would be of extreme importance if such a need should develop unexpectedly. A large rotor should preferably be suspended vertically above a sandbox to soften the impact of the impeller as it falls from the shaft. Alternatively, the rotors may be suspended over wooden scaffolding or similar rigging as long as the drop distance from the impeller edge to the wooden structure does not exceed 2 in. A smaller rotor may be mounted horizontally but must then be rotated continuously while the heating and impeller removal procedure is in progress

   It may be necessary to tap the heated impeller with a soft (lead) hammer in order to get it moving. The weight of the impeller should causes it to slide when it is hot enough. (*Note*: We insist on using a soft hammer.)

Impeller Inspection and Overspeed Testing Impeller inspection and overspeed testing are required for new impellers and for any impellers presently in a reliability-focused owner's spare rotor storage. Such testing would also be required on impellers slated for reuse in replacement rotors being assembled by a compressor manufacturer.

Impeller inspection is divided into two logical segments: *before* and *after* overspeed tests. Before overspeed testing, the owner's inspector should be present when the compressor manufacturer conducts important work, such as:

- Ultrasonic testing of forgings prior to machining. If ultrasonic testing has been or will be performed at the foundry, the owner's inspector should review all applicable certificates and forward them to the designated owner's engineer or project team. Impellers should be balanced individually before overspeed testing. Grinding to achieve proper balance shall in no case reduce the remaining material thickness below the drawing-specified dimension. If necessary, the vendor should machine an entire quadrant or similar portion of the impeller.

- Liquid penetrant testing or, alternatively, magnetic particle examination. Liquid penetrant testing or magnetic particle examination should be performed after each weld operation and after each heat cycle. The owner's inspector should visually examine the cover, disks and vanes for surface flaws. This should be done at the same time that preliminary liquid penetrant or magnetic particle examination is made.
- Measurement and recording of critical dimensions.

Fabrication Inspection A reliability-focused owner will actually check the vendor's fabrication, inspection procedures, and workmanship standards for welded impellers as discussed below:

Materials Impeller materials such as 4140 used in typical compressor rotors fall within the requirements for grade B of ASTM A294, a Ni–Cr–Mo alloy steel. This steel can, theoretically, be heat treated to moderately high yield strenghts of 80 to 100,000 psi and ultimate strengths of 110 to 130,000 psi. Conservative, reliability-focused owner companies insist that rotors in H_2S-containing process gas service and have *yield* strength and hardness limitations of 90,000 psi and RC-22, respectively.

1. Hardness limits imposed by H_2S service are an indirect limitation on *yield* strength because of the correlation that exists between tensile strength and hardness. These issues are addressed in such standards as ASTM A-370. However, the hardness limit may be exceeded in the weld region of impellers whose critical dimensions have been fully established.
2. The compressor manufacturer may start with annealed material and heat-treat the completed wheel to obtain the desired physical properties. Alternatively, the manufacturer may begin with quenched and tempered material and post-weld-treat the assembly.
3. Determine if the impeller material requires that the parts be preheated and kept heated during welding. Establish if the weldment must receive postweld heat treatment. Failure to keep some materials hot for welding will cause cracking underneath the bead.

Wheel (Impeller) Assembly Compressor manufacturers, of course, have several wheel designs. The design controls the sequence of assembly, the weld joint configuration, the welding process used, and so on.

1. The owner's inspector should determine the compressor manufacturer's methods in building a wheel, including its workmanship standards. If workmanship is not considered acceptable, this must be resolved through discussion and agreement with the manufacturer and the owner's machinery engineer. Resolution should start at the preinspection meeting. It must be kept in mind that if standards need to be improved, the requests must be made in such a manner that extra charges are avoided. For example, there has been difficulty convincing a few manufacturers that they should be

concerned about undercutting in welds on impellers. Reliability-focused users do not feel that the amount of undercut permitted should exceed the following values:

  a. Maximum depth 0.030 in., up to 1 in. long.
  b. Maximum depth 0.010 in., up to 6 in. long.
  c. Individual linear indications shall not exceed $\frac{3}{16}$ in.
  d. Concavity beyond drawing-specified crown must be ground down.
  e. *Fillets:* the specified leg length must be maintained. This is an indirect control on maximum throat thickness. The weld bead must be fused at the root and toes.
  f. Root porosities are not to exceed $\frac{3}{32}$ in. in diameter. Occasionally, an excessive gap at the vane-disk or cover interface causes root cracking.
  g. If full penetration tee welds are not required at the wheel edge, the cross section of the weld on the machined edge of the wheel should be checked visually for root cracks and repaired if any are found.
  h. *Pinholes (piping):* maximum diameter $\frac{1}{16}$ in. (1.5 mm); not more than one in each 4 in. (~100 mm) of weld length. Deviations are allowed for certain materials and should be discussed with the owner's machinery engineer.
  i. *Cracks:* transverse—none permitted. Ask if the manufacturer has a procedure!
  j. *Notches, slag pockets, and arc craters:* on unfinished impellers, remove by grinding unless the remaining weld metal is under a specified thickness, in which case the area should be filled with clean weld metal.
  k. *Spatter:* all spatter must be removed.
  l. *Lack of fusion:* none permitted in transverse direction.

2. Unless approved by the owner's machinery engineer, the inspector cannot incur extra charges to obtain improved workmanship.
3. The compressor manufacturer is usually able to provide maps showing indications requiring repair on preused (facility-owned) impellers. The owner's inspector must verify these indications and request the compressor manufacturer's formal advice regarding the cost of required repairs.
4. Base metal indications and their removal on new and/or used impellers are generally governed by the procedures of competent compressor manufacturers.

Impeller (Wheel) Inspection The inspector should spot-check the weld shop periodically to see that the compressor manufacturer's own procedures are being followed. These checks should be performed at agreed-upon times, if necessary with the manufacturer's escort in proprietary areas of the plant. Checks typically cover the following:

1. Joint preparation. A good many designs call for the vanes to be double-fillet-welded to the disk and cover, although butt welds and a slot weld have been used. At points of high stress, as on the eye end of the vane and possibly at the outer end, complete root penetration may be specified. This requires some type of back-grinding, gouging, and so on, after one side of the fillet is made.
2. Measurement of the amount of preheat and interpass temperature being maintained. Low temperature can cause "underbead" cracking.
3. Whether correct electrodes are being used and if they are being cared for properly. Wheel welds may be made in one or two passes. As an example, AWS class E7018

electrodes are commonly used for the root pass of two-pass welds or for one-pass deposits. This electrode has a low hydrogen coating and good resistance to cracking. For the second and final layer of weld metal, an E6027 electrode has been used. This electrode produces flat or slightly concave fillets with fine ripples which minimize the amount of cleaning and finishing required. The E7018 electrode deposit is not quite as good in this respect. Some undercut may be found along the edges where it is difficult to get the electrode in the right position, as in the gas passages. More spatter can also be expected from the 7018 electrode. Note that E7018 electrodes must be kept in an oven at 225°F until actual use. Both electrodes have lower strength than the parent metal. It is estimated that the weld deposit of an E7018 wire, through alloy pickup from the base metal and final heat treatment, might end up with a tensile strength of 75,000 psi. The tensile strength of the outer layer of weld metal E6027 might be between 60,000 and 65,000 psi upon completion. This approach has proven satisfactory for compressor wheels. However, some experts feel that the strength of the weld deposit should match or slightly exceed the strength of the base metal.

4. Because the finished impeller has a Rockwell C hardness limitation due to H_2 service, the base metal in each wheel should be checked with a portable instrument. Accurate determination of weld metal and heat-affected zone hardness on a finished impeller is most difficult without destroying the impeller. The hardness requirement for the weld can be satisfied by having the manufacturer make a mock-up joint using the welding procedure employing the maximum thickness of impeller material to be used, and duplicating the same joint, electrodes, heat treatment, and so on, that each impeller receives. The mock-up should be cut so that the cross section of the weld is exposed and a Rockwell C hardness traverse can be taken across the face. The traverse should be made parallel to and not over 2 mm below the surface. If high hardness is verified, the mock-up must be heat-treated, resectioned, rechecked, and so on, until satisfactory hardness is obtained. The welding procedure, heat treatment, and so on, that produced acceptable hardness levels must be used on the wheels.

This qualification test need not be repeated as long as none of the essential variables are changed. The compressor manufacturer should keep the results of this test on file for at least five years. In other words, if it can be established that the qualification procedure has been followed previously for impellers of identical material, none of the above might have to be applied to the owner's impellers.

Weld Examination

Radiography Method Radiography has not been widely used for checking weld quality in welded impellers, due primarily to the type of welds used and because of wheel configuration. If special application is made of radiography on welded impellers, the acceptance level for weld flaws must be determined at the preinspection meeting. Moreover, it is necessary to agree how often radiography will be used and what follow-up is required when defective welding is found. The inspector must obtain the owner's machinery engineer's approval of the applicable manufacturer's standards. The quality of the radiographs in terms of density, sensitivity, and so on, should correspond to ASME Section VIII, Par. UW-51 standards, bearing in mind that weld configuration and impeller construction may prevent strict compliance with code requirements.

Liquid Penetrant Method This technique only discloses flaws open to the surface. The fluorescent penetrants are more sensitive than the visible dyes because of the viewing conditions. If the vendor opts to use liquid penetrant, the standards should always be reviewed by the inspector. Cracks and cracklike indications are unacceptable. Scattered porosity can be accepted provided that there are fewer than four rounded pores in a line, separated by more than $\frac{1}{16}$ in. edge to edge, axially oriented with respect to the weld. Gross surface porosity density should not exceed that indicated by the medium-porosity chart for $\frac{1}{2}$ in. thick welds in Appendix IV of Section VIII, Div. 1 of the ASME code. More relaxed standards must be approved by the owner's machinery engineer. The weld surface flaw standards in the AWS structural welding code are often considered to be too lenient by reliability-focused owner–users.

Magnetic Particle Method This method is preferred for linear flaws on or within $\frac{1}{8}$ in. of the surface in materials that can be magnetized. To be effective, the magnetic field must be oriented so that it crosses the flaw at an angle of roughly 45°. Fortunately, most flaws in new impellers are longitudinally oriented with respect to the weld. Fatigue cracks in an impeller that has been in service might have random orientation, so that the magnetic field should be applied in two directions roughly 90° apart. It is possible to detect an open gap under a vane where the fillets do not have full penetration. This is especially so if the throat of the *weld* is undersize or the gap is excessively wide. If these indications are strong (heavy), the inspector must be satisfied that the weld is acceptable. In such a case, it might be necessary to weld a mock-up with a known flaw of the type suspected. A cracklike flaw will give a sharper-edged indication. The magnetizing force should meet or exceed ASME Code, Sec. VIII requirements.

All cracks and cracklike flaws are to be addressed as stated earlier. Any porosity indications should be judged the same as those disclosed by liquid penetrant examination.

Ultrasonic Examination If the vendor opts to use this inspection method, the following should apply:

1. The shear wave of the weld will determine the degree of weld penetration and detect flaws per ASME Code, Section VIII. A straight beam can be used on fillet welds. Ultrasonic examination is not used routinely on welded impellers. It has been used for special applications such as checking for underbead cracks and on plug welds, for lack of root penetration. Examination of the fillet welds joining the vane to either the disk or cover presents practical problems. These become more acute when the fillets do not have complete penetration, as is usually the case. The difficulties are:
    a. Flaw orientation. Tight subsurface throat cracks and lack of penetration at the root of the weld may not be found by ultrasonic testing.
    b. Small clearances in the gas passages. Usually, they do not permit the use of crystals inside the passages. This requires that any examination be done through the disk or cover.
    c. Varying material thickness. The disks and covers usually taper in thickness from the hub toward the periphery. Crystal movement must be adjusted to compensate for this.
    d. Ultrasonic testing response from the open root of the tee joint makes interpretation difficult and confusing. With this type of joint only the area underneath the toe of fillets in the disks and covers can be tested confidently. More response is obtained if the weld has complete penetration through the vane.

2. Ordinarily, the compressor manufacturer's standards for flaw acceptance and instrument calibration can be used. As a guide, when difficulty was being experienced with underbead cracking, all flaws with an indicated depth greater than $\frac{1}{8}$ in. in length were rejected.
3. Repairs
   a. If the examinations show defective welds, or the like, the impeller must be repaired, reexamined as before, centrifugated again, and followed by any final NDT required.
   b. If the material air-hardens in response to the heat input from welding and will require preheat, maintenance of interpass temperature, and PWHT, these requirements must be met when repairs are made. The inspector should not accept a repair on an impeller that was not made in accordance with the welding procedure used when the impeller was built, unless it is specifically approved by the owner's machinery engineer.

Dimensional Checking Dimensional checking is required for impeller hub bore, outside diameter, eye diameter, vane width, and disk and cover thickness. Be especially careful not to allow unacceptable tapering or out-of- roundness of impeller bores on impellers that have been removed from a preexisting rotor. Dimensions must be within drawing tolerances or in accordance with engineering instructions superseding these drawings. They should be recorded for comparison with measurement made after overspeed testing. The owner's inspector should always witness these checks.

Overspeed Testing Overspeed testing of each impeller should be witnessed at 115% of compressor maximum continuous speed for proven designs, or 120% of maximum continuous speed for new impeller designs. The overspeed test speeds should be specified in the correct order and may sometimes differ from those presently used in the impellers and rotors operating at the owner's facility. After the overspeed test, each impeller should be visually reexamined and any required NDT examinations witnessed. The inspector should note that the points of highest stress are in the cover close to the eye of the impeller near where the vanes terminate. These are points where indications of possible failure should first show.

1. API 617 assumes that compressor manufacturers have established their own acceptance standards for flaw indications. For casting and forging flaws, a compressor manufacturer's standards can be compared with those given in the ASME Code, Section VIII, Div. I. A good inspector will be familiar with ASME NDT flaw acceptance criteria and will consult all applicable references. If the compressor manufacturer's standards are more lenient than those listed in the applicable ASME documents, the inspector should request instructions from the owner's machinery engineer unless this specification has already covered the deviation.
2. If repairs are necessary, the repaired area must be reexamined by the specified NDT method and the wheel overspeed retested.
3. Impeller diameters, including hub bore, should be rechecked. If the growth exceeds the compressor manufacturer's tolerances, the wheel must be rejected by the owner's inspector. Following that, the compressor manufacturer's proposed action should be referred to the owner's machinery engineer for approval.

Rotor Inspection

1. The major components of the rotor assembly are the shaft, shaft spacers, impellers, balancing drum, and thrust collar. If an order utilizes shafts that have originally run in the owner's compressors, ultrasonic testing of the shaft is not required.
2. The critical shaft dimensions are the diameters over which shrink fits will be made, where keys will be placed, and at the journals. These dimensions must be checked carefully and recorded. The finish of the journals and probe surfaces can be examined again when runout of the rotor is checked.
3. Any potential proposal to correct an undersized journal or shaft area by chrome plating cannot be approved by the inspector; this must be done by the owner's machinery engineer. A reliability-focused owner's basic policy is not to accept plating as a repair for increasing shaft diameters, but there have been cases where 10 to 15 mils (0.010 to 0.015 in. or 0.25 to 0.37 mm) were added to the diameter, and approved.
4. When the impellers are assembled on the shaft with a shrink fit, the inspector should verify that manufacturers' responsible personnel control the bore diameters of the hubs and the temperature to which the impellers are being heated.
5. Before witnessing the final balance, the inspector should review shop assembly records and review the interference fits of wheels on shafts against the manufacturer's standards. Normal interference is 0.001 in. per inch of shaft diameter.
6. High-speed dynamic balancing of the compressor rotors is required and the final balance check must be witnessed. The inspector must know if an incremental balancing procedure is required. Responsible engineering personnel should be identified, and it must be ascertained that such a procedure is actually followed by these personnel.
   a. Runout checks of the assembled rotor should be witnessed. The runout check made after rotor assembly is particularly important, since the measurements will indicate if the rotor has been assembled properly or has bowed due to stresses introduced during assembly or by mishandling.
   b. For a runout check, the rotor can be supported on level knife edges or the check can be made while the rotor is still in the balancing machine. A dial indicator is set up on the diameter to be checked, and the rotor is rotated. The total reading is the runout. Runout checks should be made on the bearing journal surface, the radial vibration probe surface, impeller eyes, and thrust collar surfaces.

These readings are to be compared to those on shop assembly drawings. Any measurements outside of tolerance must be questioned, as there may be bowing of the shaft or assembly errors. The owner's inspector must be certain that the mechanical runout at the radial vibration probe surfaces does not exceed 0.2 mil. The inspector must also check that the shaft surface finish at radial probe locations is equal to the finish on the journals. Axial probe sensing surfaces must be perpendicular to the shaft axis within 0.2 mil.

Next, the electrical runout in the eddy-current probe areas of the shaft must be checked and recorded. If the total (mechanical plus electrical) runout exceeds 0.25 mil on new shafts or 0.5 mil on reused shafts, the surface must be burnished, or fitted with a sleeve. Final compliance must be verified by the owner's inspector. At this stage in the manufacturing cycle, it must be verified that the residual magnetism in shafts and impellers does not exceed 3 G. This is an important requirement that is often overlooked.

Safety The inspection work described above is typical and must be amended or structured for a particular job. It obviously involves close visual examinations, witnessing of tests, and at times, the use of gauges to check the compressor manufacturer's quality control effort. But safety is part of the inspection job. The minimum eye protection required while engaged in this type of work includes safety glasses with side shields. Hearing protection may be required in certain areas of the compressor manufacturer's plant. As a guide, if conversation is difficult due to noise level, use hearing protection. Beware of damage to the fingers while inspecting impellers. One should never examine equipment while suspended from a crane. Also, the inspector must not wear ties, dangling decorations, loose-fitting clothing, or loose long hair while working around rotating machinery.

Often, this work is done on a test stand that presents its own hazards to the inspector. Beware of slippery surfaces; temporary connections of steam, oil, and water; electrical and instrument lines; temporary platforms and access; exposed couplings; and inadequate lighting. The inspector should be careful of tripping hazards, ungrounded electrical test equipment, and temporary manhole or pit covers.

Odd-hour visits require special precautions, and inspectors should plan for their departure by parking their cars in a secure area. One should realize that safety procedures or regulations may be relaxed, exit doors locked, and fire protection unavailable outside normal working hours. Competent inspectors will thus plan their odd-hour visits to include safety considerations. They will plan ahead and will be careful of overhead cranes. Rational people will not work under cranes or around forklift trucks. Competent inspectors stay clear of aisles, check housekeeping around the work area, make a safety appraisal of the activity, and practice exposure control.

20.7 COMPRESSOR INSTALLATION SPECIFICATIONS

Installation specifications are designed to guide a project team in the installation of a centrifugal compressor train. Such information is among the dozens of sets of documents that must be on hand and must either be accepted by, or negotiated with, the various contractors and suppliers involved in a project. Unless the machinery engineer develops, collects, reviews, understands, and verifies the actual implementation of procedures and specifications such as these, satisfactory long-term compressor performance will be difficult to achieve.

It is obvious, then, that compressor train installation and startup require planning and forethought. There are definite routines and structured activities that must be executed by the parties involved. Virtually all of the decisions made at this stage have long-term impact on equipment reliability and plant profitability. It is thus essential to place detailed information about the compressor and its driver in the hands of the project team during the planning stage. At the inception of a project involving compressors, a competent machinery engineer must be assigned to advise process designers on the best equipment choices. Reliable compressors will cost more to purchase, yet will pay back the incremental outlay many times over the life of the plant. There have been many instances where the incremental cost of superior compression machinery was recovered within weeks after a successful startup [4].

In any event, competent machinery engineers should assist the cost estimators in determining accurate project cost. Many projects start out in trouble because of unrealistically low-cost estimates being used to obtain project approval. Once the money is allocated, project costs are often considered firm and escalations are frowned upon. Efforts at coming in under budget generally affect the rotating equipment and maintenance reduction features. The ultimate effect is easy to predict: There will be an increased number of downtime events, and costly repeat maintenance work will reduce plant profits for years to come.

The development of complete compressor design, installation, and commissioning specifications is thus a key mandate for the machinery engineer. He or she must review each specification to see the "up-front" planning that was done. With detailed information presented up front, the engineer is equipped with instructions understood to be binding and will become the "yardstick" used to measure the vendor's compliance.

20.7.1 Field Erection and Installation Specifications for Special-Purpose Machinery

It is neither the purpose nor is it within the scope of this book to give detailed field erection and installation specifications for the many compressor models found in modern process industry. However, these specifications are definitely needed by reliability-focused plants. Moreover, they must be reviewed, understood, and approved by a competent machinery engineer. All of these specifications have a few things in common:

- The scope of a standard must be explained. For example, a field erection and installation standard would cover mandatory requirements governing installation and erection for compressors and drivers mounted on baseplates or soleplates.
- Additional information is almost always superimposed on existing industry standards. An asterisk (*) might be used to indicate that additional information is required. Here, the contractor may have to specify, and the owner's machinery engineer may have to approve information.
- A summary of additional requirements is provided. A separate tabulation of applicable cross-references usually lists documents that have to be used with this standard.
- Design requirements are explained. Concrete foundation must be properly sized and proportioned for adequate machinery support and prevailing piping forces. The complete compressor train (compressor, gear, and motor or other drivers) must have a common foundation.
- Foundations must rest on natural rock or entirely on solid earth or good compacted and stabilized soil. They must be supported on pilings that have a rigid continuous cap or slab cover.
- Foundation must be isolated from all other structures, such as walls, other foundations, or operating platforms. They have to be designed to avoid resonant vibration frequencies at operating speeds, 40 to 50% of operating speeds, rotor critical speeds, gear meshing frequencies, two times operating speeds, and known, specified background vibration frequencies.
- The temperature surrounding a foundation must be analyzed to verify uniformity so as to prevent any distortion and misalignment. Concrete foundations must also be cured properly (approximately 28 days) before loading.
- Foundation arrangements are described. Anchor bolts must be designed by specialty firms and must be sleeved. In most instances, a civil engineer will provide and/or certify a foundation drawing or separate foundation specification.
- Around the perimeter a W-8 or larger I-beam must be properly anchored to the foundation for supporting small piping, conduit, and instruments. Auxiliary structures, including piping, merit special and separate design.
- Typical compressor, gear, and motor foundation arrangements and baseplates must be completely filled with epoxy grout. Soleplates must be completely supported with epoxy grout.

- Reinforcing rods, ties, or any steel members must be a minimum of 2 in. (~50 mm) below concrete surface to permit chipping away 1 in. of concrete without interference.
- A minimum space of 1 in. (~25 mm) must be provided between the foundation and a chock block for proper grout flow. The maximum distance between foundation and baseplate should not exceed 4 in. (~100 mm). The minimum distance between the foundation and the baseplate should not be less than $2\frac{1}{4}$ in. (approximately 55 mm).
- For epoxy chock applications, the distance between the baseplate or soleplate and the top of the grout should be 1 in. (~25 mm) unless otherwise approved by the owner's machinery engineer.
- The chock block arrangement and installation are described. Chock blocks must be sized properly to distribute anchor bolt and machine loads so as not to exceed 10% of the weakest compressive strength material in the foundation structure. (The customary design is 300 psi for concrete.)
- Instructions and appropriate illustrations of field erection and assembly tools must be provided. For instance, a special hydraulic coupling hub-to-output-shaft installation tool will probably be used in most modern plants.

REFERENCES

1. Bloch, Heinz P., *Machinery Reliability Improvement,* Gulf Publishing Company, Houston, Tex., 1982; also revised 2nd and 3rd eds.
2. Bloch, Heinz P. and J. Hoefner, *Reciprocating Compressor Operation and Maintenance,* Gulf Publishing Company, Houston, Tex., 1996.
3. Bloch, Heinz P. and F. K. Geitner, *Major Process Equipment Maintenance and Repair,* Gulf Publishing Company, Houston, Tex., 1985; Also revised 2nd ed.
4. Bloch, Heinz P. and F. K. Geitner, *Maximizing Machinery Uptime*, Gulf Professional Books, Houston, Tex., 2006.

21

RELIABILITY-DRIVEN ASSET MANAGEMENT STRATEGIES

There are many reasonable definitions of *asset management*, the cost-effective balance of specifying and buying the right equipment, and installing, maintaining, and operating the equipment in accordance with practices that lead to lowest life-cycle cost for the product produced by an industrial facility. Reliability-driven asset management is worthy of making up the final chapter of the book. All of the most important issues can be summarized in explaining the strategy employed by two colleagues of the author. One is a practicing machinery engineer, the other an experienced management consultant. Their contributed material is included in the book because the practices they advocate have resulted in compressor uptime optimization.

21.1 STRATEGY FOR RECIPROCATING COMPRESSORS*

Quantitative reliability analysis is finding increasing use in the petrochemical industry. Statistical software exists that helps develop failure distributions from historical maintenance data. Also, sophisticated simulations and modeling packages that facilitate reliability availability and maintainability (RAM) studies of complex systems are available. Both have encouraged use of advanced reliability techniques for many purposes.

However, these "tools" are underutilized in the development of asset management strategies for critical equipment in the petrochemical, oil, and gas industries. Needless to say, the potential rewards of statistical and RAM approaches to establishing optimized equipment strategies are great. Their use can result in maintenance cost savings, increased uptime, and

---

* Contributed by Shiraz A. Pradhan, Pradhan Core Engineering, Baytown, Tex.

A Practical Guide to Compressor Technology, Second Edition, By Heinz P. Bloch

longer run intervals. In this section we outline a proven method of applying reliability analysis to asset management.

Maintainability is an integral part of reliability and an integral arm of equipment asset management because it affects uptime. Equipment mean time to repair (MTTR) becomes important. Therefore, in this section of the concluding chapter we also look at special methods to minimize the MTTR and increase availability. For example, reciprocating compressors of the labyrinth piston type are an important part of modern process plants and gas distribution installations. Recall that these machines were highlighted in Figs. 4.1 through 4.3 and 4.5 through 4.8**.** They are suitable for all gases in chemical- and petroleum-refining processes. These machines operate non-spared i.e. without redundancy in many critical applications. Their reliability requirement is therefore extremely high. Cost competitiveness in the process industry requires very tight maintenance cost control. For this reason, maintenance cost comparisons of different types of reciprocating compressors has been the subject of papers in the past [1]. How, then, can we achieve high reliability and availability and at the same time minimize maintenance cost for these compressors?

In practical terms, achieving high reliability and availability of these compressors and, for that matter, other machinery is dependent on three factors:

- The operating philosophy of the compressors (i.e., how strictly they are operated within their design or process operating window)
- Maintenance strategy employed for upkeep of the compressors [i.e., breakdown or proactive maintenance (time- or condition-based)]
- Extent of predictive and protective instrumentation and surveillance deployed to indicate the health of the compressors and prevent catastrophic failures

21.1.1 Process Operating Window

Operating reciprocating compressors within their safe design limits is a prime requirement for reliability and uptime of the entire system. Uneven balance between different stages of compression and excessive gas discharge temperatures can cause compressor distress. Compressors are designed to compress gases. Allowing condensed vapors to reach the compressor and even the potential of allowing liquid slugs to enter the machine are examples of operation outside the process operating window. The importance of proper upstream separation and/or filtration of gases cannot be overlooked and was therefore highlighted in an earlier chapter.

21.1.2 Breakdown Maintenance

In critical non-spared situations, breakdown maintenance may not be cost-effective, for obvious reason. With breakdown maintenance there is also the potential of consequential damage that may cost more and result in long unplanned outages and could result in unacceptable environmental releases and/or breach of safety regulations if the equipment is flammable or is used in hazardous services.

21.1.3 Time-Based Maintenance

Most original equipment manufacturers (OEMs) provide a matrix of recommended times for overhauls of reciprocating compressors. In many instances, maintenance cost or production cycles demand deferral of planned maintenance. In such cases there is a need to (1) assess if overhaul could be postponed, and (2) assess the remaining life of components with the intent to extend the mean time between overhauls (MTBO). Without correct methodology, such assessments are at best guesses, and the results are either piecemeal maintenance of components or opportunistic maintenance of the compressor. Both of these are suboptimal strategies that could have serious consequences.

21.1.4 Equipment Health Monitoring

Reciprocating compressors installed with equipment health monitoring (EHM) systems allow an opportunity to assess the health of the compressors and provide protection against catastrophic failures. Adequately instrumented compressors provide the best opportunity for application of cost-effective maintenance strategy. Increasingly, many users are transitioning from time-based to condition-based maintenance with the advent of more sophisticated EHM. Several competing EHM systems [2,3] are available on the market.

21.1.5 Reliability and Maintenance

Based on discussions above, the reliability and maintenance objectives for reciprocating compressors could be stated as:

- Determination of optimum MTBO without excessive risk of forced outages or production interruption during target time
- Stocking optimum level of spare parts
- Safe and cost-optimized planned overhaul
- Assessment of risk when the MTBO is extended

It follows that these objectives are used to guide the development of an asset management strategy.

21.1.6 Asset Management Strategy

A systematic approach to developing an effective asset management strategy for reciprocating compressors involves the following elements:

1. Review of the maintenance history of the compressors and the failure causes
2. Analysis of component(s) failure data and development of failure distributions
3. Development of equipment maintenance strategies based on statistical analysis
4. Development of a spare parts strategy

Each element is now discussed in some detail.

1. Review of the Maintenance History and Failure Data

Maintenance History Equipment maintenance history is crucial for quantitative reliability work. Details of past planned overhauls and as-found conditions of components, component failure modes, corrective maintenance events, degradation of components and their causes, as well as predictive and preventive maintenance of the compressors all provide valuable inputs that describe the behavior of equipment in an operating and maintenance context. The primary use of these data is to develop statistical failure distributions that represent failure mechanism of equipment and their subcomponents. Additionally, these data are also useful in identifying design weaknesses at the subcomponent level.

Vendor-Supplied Mean Time Between Overhauls Component overhaul and maintenance intervals provided by the original equipment manufacturers are very often conservative and are suitable for batch-operated plants where there are windows of opportunity for maintenance. Integrated continuous operating plants do not allow this luxury. It is useful to compare plant-specific historical data and overhaul intervals with OEM data to assess the gaps. This comparison will give an indication of how optimistic or pessimistic the actual overhaul cycles are compared to those recommended by OEMs. It also provides useful clues about operational and maintenance factors that influence actual overhaul cycles. An example of this is internal water washing of steam turbines to flush away buildup from internal dynamic and stationary components. In many cases this seems to help extend the MTBO of a turbine if fouling and loss of efficiency are factors that necessitate certain overhaul intervals. A more in-depth review of vendor-recommended MTBO numbers often reveals components that are life limiting. Upgrades of these components allows the MTBO to be extended.

Overhaul Reports A detailed summary of overhauls provides vital information regarding life factors and the condition of equipment components at each overhaul. The summary must include the run hours of the compressor. Statistical analysis requires quantitative life data in cycles, hours, or years. It is good practice to conduct a root cause failure analysis of all failed components. This serves to define causes of failure and will identify the underlying component design deficiencies, if any exist.

Root Cause Failure Analysis A careful study of component failure modes and degradation reveals predominant failure mechanisms and causes that are influencing component lives. For example, in a petrochemcial application, the suction and discharge valves of a compressor showed random failures of the valve damper plates within the first year of its operation. The predicted life was 24 months for the valves. Root cause failure analysis showed that the failures were due to inadequate stress relieving of the plates after manufacturing.

2. Development of Failure Distributions (Weibull Function) Weibull functions are often used to model engineering failure distributions for a wide variety of applications, including bearings, mechanical seals, and components subjected to wear, fatigue, creep, thermal stress, and corrosion [4–6]. Each failure mode has an associated distinct Weibull failure distribution.

The Weibull distribution equation is

$$F(t) = 1 - \exp\left(-\frac{t}{\eta}\right)^{\beta} \tag{21.1}$$

where $F(t) =$ fraction failing
$t =$ failure time
$\eta =$ nominal or characteristic life
$\beta =$ nondimensional shape parameter

The reliability function is

$$R(t) = \exp\left(-\frac{t}{\eta}\right)^{\beta} \tag{21.2}$$

where $R(t)$ is the probability of success $= 1 - F(t)$. The value of shape factor β is indicative of a variety of failure patterns:

- $\beta < 1$ indicates premature or infant mortality failures.

Premature failures are indicative of inherent defects or flaws in the material or repair and installation errors. In the electronic field it is usual practice to subject an assembly to *burn-in* prior to putting it in field service to weed out inherent defects. During burn-in the part is operated at elevated failure-inducing conditions. As defective and substandard parts fail and are replaced, failure frequency decreases and the assembly becomes more reliable.

- $\beta = 1$ indicates random failures.

For this case, the Weibull distribution approximates an exponential distribution and the failure rate λ is constant. During this phase the distribution has no memory and failures are random. The reciprocal of λ is the mean or expected life. It equals the mean time to failure (MTTF) for nonrepairable systems and the MTBF for repairable systems.

The reliability function for exponential distribution is

$$R(t) = \exp(-\lambda t) \tag{21.3}$$

- $1 < \beta < 4$ indicates early wear-out failures.
- $\beta > 4.0$ indicates old age (rapid wear-out).

Mechanical systems are subject to two types of failures. The first type is from loads and stresses higher than a part can stand. The second type of failure is from wear-out. For reciprocating compressors, this is the most dominant type. However, wear-out is not the predominant mode for certain other machines. Misalignment, repeated application of load, thermal cycling, abrasion, and friction are examples of wear causes.

Reciprocating compressors of the labyrinth piston design are a class of machines where wear and fatigue are significant contributors to component degradation. Weibull analysis of compressor part failures shows if the failures are premature, random, or due to wear-out of parts. It also helps predict a characteristic life for each component and for each failure mode. Weibull analysis provides a useful graphical plot (Fig. 21.1). The horizontal scale is a measure of life or aging. Hours, cycles, operating time, and stop/start cycles are examples of aging parameters. The vertical scale represents the cumulative percentage failed.

The use of Weibull analysis is illustrated with an example. Life data for compressor valves are shown in Table 21.1.

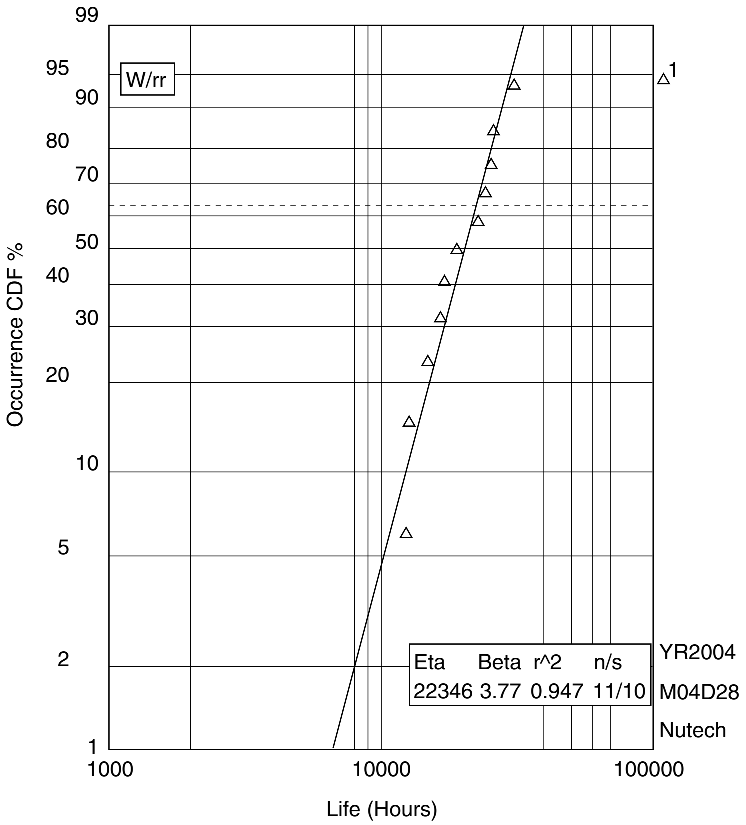

FIGURE 21.1 Weibull plot of compressor valve failures.

TABLE 21.1 Failure Data for Compressors Valves

Rank	Hours to Failure
1	8,870
2	9,300
3	10,200
4	10,600
5	12,800
6	15,100
7	17,200
8	19,200
9	24,300

The Weibull plot is generated using commercial software (Winsmith). Figure 21.1 shows the plot. In the plot, $\beta = 3.78$, which suggests that failures are due to early wear and fatigue. On the Weibull plot the characteristic life, η, occurs at the 63.2 percentile of the failure distribution. In Fig. 21.1 the 63.2 percentile intersects the curve at 14,968 hours (1.7 years). Similar Weibull plots are made for all other components of the compressors where sufficient

TABLE 21.2. Weibull Data for Compressor Components

		Weibull Analysis	
Component	Failure Mode	β	η (yr), $B_{63.2}$
Group 1			
Valves	Plate and spring fatigue, residual stresses, fouling	3.78	1.7
Rod packing	Packing ring wear	4.8	1.0–1.2
Oil scraper plates	Plate wear		1.0
Group 2			
Piston skirts	Abrasive wear, corrosion, fouling	2.5	2.6
Guide bearings	Bearing insert/sleeve wear	8.6	3.0
Crosshead	Crosshead shoe wear	2.9	3.5
Piston rods	Wear in the guide bearing and packing sections		3.0
Group 3			
Journal, crank, crosshead pin bearings, and crankshaft	Wear		8

failure data were available. Table 21.2 summarizes the results of the Weibull data for all components. These data are used to develop a maintenance strategy for the compressor.

3. Development of a Maintenance Strategy Weibull data for all compressor components of interest are shown in Table 21.2, where three significant groups of life tendencies are indicated. This suggests that a block or group replacement strategy may be a possible. Shaft seals were not analyzed, but these usually have an oil collection bottle and the oil leakage is monitored. With increased oil leakage, seals are replaced to coincide with one of the groups shown in the table.

Table 21.3 outlines a possible maintenance plan for the three groups of compressor components identified in Table 21.2. The table also shows the possible potential for each group of components to increase the overall uptime of the compressor. Conditions and compressor applications vary from plant to plant, and Table 21.3 is only intended to illustrate the methodology.

4. Development of a Spare-Parts Strategy Based on the maintenance plan, a spare-parts strategy needs to be developed. A coordinated strategy helps in reducing the time waiting for spares. To shorten MTTR (mean time to repair) requires a critical assessment of all steps in assembly and disassembly of the machinery. Some steps will require modular replacement of parts. This means adequate lifting capability must be available at the appropriate time. In other cases special jigs and tools will be required to assist in the assembly and disassembly of parts. Specific examples in this category are the special tools necessary to loosen and tighten the piston rod nut and the cranes necessary for removal and lifting of the piston rod from cylinders. Many examples of rod failures are extant in industry when the loosening and tightening of piston rod nuts has been done with improper tools, resulting in premature failure of the piston rod threads due to fretting and fatigue. In other cases, special modified parts are necessary. Modular replacement of guide bearings and packing rings requires these to be of split design so that their replacement can be done without the removal of the piston rods.

TABLE 21.3 Group Replacement Cycle for Compressor Components

Group and Components	Maintenance Cycle	Spare Parts Strategy	Strategy and Comments	Life Extension Potential
Group 1: oil scraper rings, valves, rod packings	1 year	Stock scraper rings, valves, rod packings	• Replace all valves “en bloc.” • Rod packing replacement may require disassembly of the piston rod. Investigate if packing life can be extended to coincide with rod replacement. If examination of valves after one year of replacement shows the valve components replaced to be without deterioration (i.e., valve spring not fatigued, valve plates and damper plates without signs of cracks or fatigue), the valve block replacement interval could be extended.	Valves • Reduce/eliminate potential of valve fouling to extend life. • Reduce potential of liquid ingress in the compressor. • Investigate different valve design (i.e., poppet vs. plate valves). • Investigate if there are common causes for failure of valves (i.e., inadequate heat treatments of plates, etc.). Rod packing • Investigate if rings are available in sectional rings vs. solid rings for ease of maintenance. • Investigate if metal-filled packing rings will extend life and what impact this will have on rod wear.
Group 2: piston skirts, guide bearings, cross head shoes, piston rods, shaft seal	3 years	Stock piston skirts, guide bearing, crosshead shoes, piston rods	• Replace guide-bearing liners, crosshead . shoes, and shaft seal. • Examine the piston rods for wear in the guide bearing and packing ring area. If worn, replace the rods. Hard-face the piston rods in the packing and guide-bearing area. If metal-filled packing rings are used, there is potential of increased wear of rods in these areas.	Piston rod: To reduce downtime for hard facing, investigate the justification for spare rods to be purchased pre-hard-faced.

		• For shaft seals, check if the seal replacement interval can be extended. Monitor oil leakage from the seals in measured bottles. Conduct condition-based checks for group 3 components at 3-year intervals (see below).
Group 3: journal, crank and crosshead pin bearings, crank shaft	6–8 years Oil analysis monthly	Conduct condition-based maintenance on these components at 3-year intervals coincident with group 2 maintenance above. Conduct the following checks: • Bearing clearance and lift check for crank and journal bearings • Alignment checks If bearing lift checks indicates excessive clearances, replace the bearings. In general, compressor crank shafts have a long life. However, abnormal operating conditions such as lack of lubrication, contaminated lubricant, or high concentration of dissolved gas in oil may lead to shaft wear in the bearing area, and this may require shaft replacement or re-work. • Regular oil analysis for metals in oil; degradation of oil (monthly oil analysis)

In labyrinth piston compressors the piston rod area at guide bearing and packing ring sections experiences wear, especially in metal-filled packing rings. The piston rods are tapered. Repair of the rods usually requires machining of the rods and metallizing the affected areas with hard facing material. Therefore, accurate knowledge of the taper geometry is required for repair if catastrophic failures are to be avoided. This requires that the rods be repaired by qualified repair shops. This extends the gross repair time (GRP) of the compressor. The MTTR for rod repair can be anywhere from 30 to 100 hours, not including the GRT. An alternative strategy is to stock premetallized spare rods and to swap these when necessary. Using this approach requires a comparison of the cost of spare rods against the incremental reduction in gross repair time.

21.2 ACHIEVING COMPRESSOR ASSET OPTIMIZATION*

It is only reasonable to assume that readers of a book dealing with compressor technology will be keenly interested in optimizing this very important asset, the compressor. In this chapter we therefore explain the asset optimization issue—an issue that cannot be overlooked. Getting the best overall performance from compressors involves more than specification, procurement, installation, and operation. Profitable performance involves understanding and practicing the principles of asset optimization and its many ramifications. Insight on existing approaches is needed, and the good approaches have to be separated from those that are less successful. Using the basic structure of asset utilization taught in Ref. 7 and adapting it to managing the process gas compressor—which quite obviously qualifies as a major asset—this concluding topic begs to be incorporated in this book.

21.2.1 Input Obtained from Workshops

Considerable input of universal interest was obtained in discussing the asset management issue with top-performing companies. It is apparent that best-of-class performers across a broad range of industries and companies have in common an acute awareness of the need to optimize compressor utilization and effectiveness. On their journey to achieving industry-best asset performance overall, they have come to share many important cultural imperatives, organizational and management strategies, and physical work processes and practices. It is of equal interest that the discussion partners are rarely, if ever, satisfied with current results or the status quo but, instead, are committed to continuous improvement and constantly increasing performance levels.

For years, participants in asset optimization workshops [7] have been given the opportunity to identify organizational strengths as well as opportunities for further improvement. There is consensus that global competition for products and capital is driving requirements to increase asset reliability, effectiveness, and utilization. Increasing demand, combined with the *difficulty*—more likely *impossibility*—of constructing new hydrocarbon-processing facilities in North America are placing extreme pressure on existing facilities. Plants are often required to boost manufacturing productivity, utilization, and throughput. They must often comply with stricter environmental rules while simultaneously being forced to reduce costs.

---

* Based on Ref. 7, by permission of John S. Mitchell.

That said, personnel responsible for general asset productivity, compressor uptime, and asset optimization must meet three primary objectives in order to gain and maintain the level of performance necessary for competitive manufacturing productivity and profitability:

- System and equipment production availability must be close to or match the industry best.
- Unavailability—both timing and duration—must be predictable; there must be no surprises.
- Cost per production unit (pound, barrel, etc.) must approach or match the industry best.

It is noteworthy that these three essentials for optimizing *asset effectiveness* are matched by similar imperatives for optimizing *production effectiveness*. The two, asset and production effectiveness, combine with factors such as cost of raw materials, utilities, and market selling price. Together, these factors determine the profitability and success of a manufacturing enterprise.

But there are other essential attributes that are shared by industry-best production facilities. These emerge repeatedly within workshops and discussions; they are considered indispensable for industry-best performers. Industry-best performers have in common:

- Engaged executives and senior managers who understand and drive the improvement process
- Reliability-oriented culture of honesty, trust, and quality
- Committed, highly competent working-level leadership and management
- Focus on proactive risk identification, assessment, and mitigation
- Costs controlled by eliminating requirements for spending
- Highly proficient at the basics: robust processes, practices, and technology in place to produce industry-best results
- Optimized lifetime cost
- Ready availability of data and information
- Reliability improvement teams actively driving improvement initiatives
- Accountability at all levels, enforced with impeccable justice

Industry-Best Compressor Availability As stated earlier, companies with world-class ambitions recognize that asset availability and utilization must be close to industry-best benchmarks to assure that production and revenue meet business requirements. However, few may realize that asset availability and utilization *below* existing industry-best benchmarks affect performance benchmarks in other areas, such as cost per unit (pound, barrel, etc.).

Substandard asset availability means that the plant is actually smaller than the nameplate production output. In this condition, performance benchmarks must be adjusted downward. As an example, if an entire plant is operating at 63% availability compared to a world-class benchmark of 88% (actual numbers from a batch chemical facility), the facility is effectively 25% smaller than the nameplate production output. To join the top performers with competitive overall performance, either availability must be increased to the world-class value or costs must be reduced 25% below metrics based on nameplate capacity. It should be noted that this simplified example does not consider additional harm caused by underperforming availability, such as scheduling disruptions, missed deliveries, and diminished capital effectiveness.

Needless to say, process compressor availability deserves close scrutiny. Centrifugal compressor availability among leading process plants often exceeds 99.5%. Reciprocating compressor availabilities of 98.5% are no longer unusual for top-reliability-focused process plants.

SIDEBAR: BENCHMARK AWARENESS

Industry, process, and equipment effectiveness benchmarks are published and readily available for nearly every activity. These benchmarks define industry-best performance and are the comparison standard to identify areas where improvement is necessary. Key performance benchmarks include production availability, maintenance cost, origin of maintenance requirements, work schedule compliance, backlog, work quality, and equipment reliability expressed as MTBF (mean time between failures). Two precautions:

1. Many petrochemical industry metrics are expressed as a percentage of replacement asset value (RAV) or estimated replacement value (ERV). Both are an estimated current cost to replace a given production output. Calculations are often inconsistent between companies and even similar plants within the same company. RAV and ERV are good measures for tracking a plant's progress but should be used with caution when comparing performance between facilities and companies.
2. Benchmarks must be used with caution. Definitions of all the terms in a benchmark must be understood as well as the method of calculation to assure comparing equals. As examples, do your definitions of failure and rework conform with industry definitions used in MTBF and work quality benchmarks?

Predictable Unavailability — No Surprises We might agree that it would not be acceptable to have modern passenger automobiles fail unexpectedly and at the least convenient time. At most, we would expect *controlled unavailability* for routine preventive maintenance. It should be no different with industrial assets and, especially, with process gas compressors. Anyone who has been involved with making a product knows well the chaos and inefficiencies associated with surprises: unanticipated failures and unscheduled outages. Both carry significant cost and production penalties. Here is an actual example.

> A large facility in Southeast Asia had been struggling for over half a year to meet ambitious cost and availability objectives. A single unexpected outage, experienced on a weekend, eliminated all chances of compliance for the year, as well as performance-based bonuses. It goes without saying that minimal variation and predictability are essential elements of world-class asset utilization and effectiveness.

Senior plant management often point to "surprises" as a primary performance deficiency within their organizations. Accordingly, industry-best organizations strive to achieve 100% predictability. Predictability can be achieved for centrifugal compressors when all of the ingredients for success—specification, design review or design critique followed by elimination of vulnerabilities, component upgrading, correct manufacturing, thorough inspection, sound field installation, conscientious surveillance, regular condition monitoring, trending and assessment, rigorous operational training, and procedure-based execution—join together.

One plant established the objective of less than one unplanned event occurring over a two-year period to be achieved within three years. This is an achievable goal, but maximizing predictability requires an effective organization, focus on reliability, as well as the deployment of a number of interrelated processes and technology. In the case of compressors the principles of specification, reviewing, auditing, and systematic upgrading highlighted in this book will prove helpful, to say the very least.

Production Costs Close to Industry Best Successful business results in the face of strong competition from low-wage areas of the world demands reducing costs to levels that would have been considered impossible a few years ago. Although other areas are not immune, management typically seeks to reduce costs by reducing personnel, even among the industry best. An asset-optimizing process often has to occur simultaneously with personnel reduction, and the reverse, personnel addition, is very seldom allowed. To cope with this mandate, people entrusted with asset preservation must make it their goal to work smarter, not harder.

Most companies in North America have made strides toward reductions in resident workforce. Outsourcing labor may have led to further economies; however, outsourcing has other complications and needs to be managed. Specifically, where does the expertise of an outside compressor maintenance contractor originate? How is application of expertise ascertained? Who inspects and has the authority to enforce the requisite standards of workmanship?

Experience demonstrates that the best way to reduce cost begins by increasing system, equipment, and component reliability. Aimed at reducing requirements for work, and hence the need for increased maintenance spending, staffing levels can be optimized for the declining workload. Many companies find that a demographic workforce analysis, accomplished as a part of staff optimization, reveals that cost objectives can be met by personnel attrition through normal retirement. But the knowledge base of the retirees must first be passed on to the successors, and targeted training must be pursued. Without it, even normal attrition will lead to problems down the road.

It has been noted and acknowledged that competition for capital and the resulting demand for increased returns on investment drive the need for reductions in production inventory and stocked spare parts. These drivers constitute further incentives for maximizing reliability of process compressors and predictability of machine behavior. Furthermore, these drivers point to the need to ascertain the accuracy and relevance of work execution and minimizing repair-related variation.

Engaged Executives Within industry-best companies, understanding the desire for lasting change is nurtured and driven from the top. Leaders in this group recognize that continuous organizational, process, and cultural improvements are essential to keep pace in a highly competitive environment. Executives within industry-best companies take an active role in communicating and promoting the need to achieve the highest levels of excellence. This active role is an essential element of gaining the motivation, commitment, and ownership required for success at the working level.

> A plant manager stated the clear objective of attaining a cultural and organizational commitment to asset performance equal to the excellence that had been achieved in the safety, health, and environmental areas. Everyone present understood exactly what was meant and required.

Industry leaders recognize that producing the short-term results needed to satisfy business requirements within a long-term strategy of continuous improvement is the best and most certain route to success. On compressors, a short-term result may be the installation of “two-out-of-three” shutdown voting logic. The long-term strategy may be to fully automate the decision-making process for planned downtime events.

Along these lines, executives within industry-leading companies recognize that permanent improvement requires sustained and unwavering commitment and constant effort. Permanent improvement is a result, not a command, and it takes time. Best performers are well focused and make a visible and consistent commitment to permanent improvement. Not-so-good performers often suffer from erroneous executive mindsets, such as that improvement can be mandated or commanded. Indeed, such arbitrary mandates from above are a major barrier to progress within "command" organizations.

Appointing an operational leader and driving progress are other key functions of executive management. The operational leader will be assigned clear objectives, accountability for results, and a time line with rewards for success and penalties for failure. Executive management must assure that the operational leader has the organizational authority and time necessary to achieve success. In general, successful compressor optimization programs are led by someone at the superintendent level or above.

In summary, it can be said that *by their actions* executives within industry-best companies continuously demonstrate their total commitment to the improvement process. There is no doubt that a plant manager's show of interest in the improvement process by occasional active participation in meetings energizes the people and the process.

Reliability-Oriented Culture of Honesty, Trust, and Quality Participants in asset optimization workshops throughout the world all seem to agree that the greatest opportunities for improvement are found in organizational and cultural areas rather than in processes, practices, or technology. Workshop participants and other reliability-focused practitioners convey that there is much wisdom in moving to an empowered ownership, value, trust, and results-oriented culture. This is good to keep in mind but should not detract from the relevance of the hardware emphasis of this book related primarily to compressors. But since the workshop participants also agree that there is no progress without practical knowledge, this book should be consulted to impart the needed practical knowledge.

Practical knowledge is needed in a reliability-focused culture. Within this culture employees are mutually supportive and keep their minds on reliability, quality, communications, and continuous improvement. Deficiencies and problems are acknowledged and steps taken to make active and measurable improvement. Craft mechanics, technicians, and engineers are encouraged to think and act in terms of problem elimination rather than accomplishing repairs that simply lead to restoration of service. But it is not automatically assumed that they can always do so without help. If necessary, a perceptive management will encourage and often arrange for a measure of mentoring by an outside expert. Here is a simple example of improvement coming from within the ranks:

> The cooling jacket of a bearing pedestal in a steam turbine driving a compressor had cracked. The repair was reasonably straightforward; however, what had caused the failure in the first place, and how could repetition be eliminated? A cursory examination revealed that the relatively thin-wall cooling jacket was in close proximity to the turbine nozzle block and clearly subject to strong radiant heating. In operation, the cooling jacket probably experienced a several hundred degree Fahrenheit differential temperature across the thin wall. This led to excessive stress and ultimately cracking. The simple solution: Install a heat shield to eliminate radiant heating.

The preceding is a relatively straightforward example of a reliability culture of problem-cause identification and elimination that characterizes industry-best performance. Craft mechanics are encouraged to be curious and to ask continually why failures occur. Their search is given focus and guidance by a person (or persons) who will not tolerate mere treatment of the symptoms but who are intent on getting to the underlying cause of the event chain.

Within a continuous improvement culture, reliability engineers search out opportunities for increasing value. Along these lines it would be reasonable to let reliability professionals take the lead in identifying if it makes technical and economic sense to, say, replace a gear coupling on a certain compressor with a nonlubricated coupling configuration. The reliability professionals should share their findings and recommendations with craft personnel. Doing so upgrades their knowledge base and fosters a climate of mutual respect.

Committed Operating Leadership and Management As mentioned earlier, appointing operating leadership for the asset optimization program is a vital function of executive management. A successful leader of the asset optimization program must have the personal attributes of a champion as he or she will be the chief motivator and advocate for the program. The program leader must have prestige and visibility throughout the organization and occupy a position of authority capable of removing barriers by fiat if necessary. The leader must be able to work effectively with people both above and below in the organization. Most important, the leader must commit the time necessary for success in this vital position. Leading an asset optimization program is an essential position, not a collateral duty to be addressed during spare time.

In most industry-best organizations the asset optimization leader works with a strong and motivated steering committee, which is typically composed of midlevel managers. It reviews priorities, determines progress made toward objectives, and helps to remove barriers to success. Improvement initiatives are presented to the committee for review and comment. This involvement validates value and prioritization, provides a broad view of elements for success, broadens ownership, and helps formalize and organize plans. The "initiative owner" gains a broader perspective of requirements, elevates the knowledge base of all in attendance (himself or herself included!), and departs with a heightened sense of mission, ownership, and accomplishment.

Focus on Proactive Risk Identification, Assessment, and Mitigation Risk management, consisting of threat identification, assessment, and mitigation is an essential part of the process used by industry-best to minimize surprise events. It is proactive in nature and is directed toward identifying threats long before they culminate in an adverse occurrence. This rather all-inclusive risk management approach means taking solid action to reduce probability or consequences of events—optimally, both.

The industry-best firms identify risk and recognize and mitigate problems that have not yet happened. The rest wait until failure symptoms occur before they take action, thereby risking "surprises." Two events illustrate these two cultures:

- *The commendable reliability-focused culture.* A refinery recognized that the lubrication and seal oil system on a vital compressor did not meet current design standards or practice. Controls were antiquated and many people felt that the automatic start system for the spare lubricating oil pump was unreliable. Although there had never been a failure or outage attributed to this vital system, most people with knowledge considered it an incident waiting to happen. Eventually, a decision was made to replace the entire system. The task was planned thoroughly, and a replacement was engineered, procured, and installed successfully during a scheduled turnaround.

- *The outdated repair-focused organization.* Two pumps in hot hydrocarbon service were normally operated in parallel as a process reliability measure. The two pumps had flat head vs. flow characteristic curves and, in parallel, operated in a risky low-flow regime. Both pumps had historically experienced high rates of bearing failures. The threat was well known, but no action was taken. Instead, the plant depended on vibration readings and the ability to recognize a problem in time to shut a pump down prior to failure. Eventually, a very expensive failure occurred when deteriorating conditions were not recognized quickly enough.

Industry-best firms understand that risk is not simply consequences, but *probability multiplied by consequences*. Industry-best companies utilize risk ranking to assure that attention and effort are focused on the greatest threats and potentially most rewarding opportunities. The risk-ranking process must be formulated such that only about 10 to 15% of total equipment and system assets are in the highest-risk category. Much more than that and the prioritization loses impact: If almost everything is high priority, there isn't any priority.

> To illustrate, a "criticality" assessment identified approximately 1600 systems out of a total of about 2200 as a critical first priority for maintenance optimization (i.e., reliability-centered maintenance). After about a year of effort by a dozen or so reliability engineers, optimized programs had been developed and implemented for approximately 200 systems, 13% of the total considered most critical. At that point the program was more or less abandoned due to priorities, demotivated participants, diminished resources, and uncertain returns. Did the 200 analyses that had been completed cover the highest-priority systems or address the most threatening potential problems with greatest value recovery? No one knew—that step hadn't been accomplished.

Costs Controlled by Eliminating Requirements for Spending Every company that produces a product, with the possible exception of a luxury item, must operate within cost constraints dictated by profitability. All companies know what cost relationships or industry benchmarks exist to meet overall profitability objectives. These companies also know the cost impact of individual activities such as asset care or maintenance. Stated another way, industry benchmark costs define how much maintenance is affordable for a given business and level of production. If affordable maintenance is less than what seems necessary to keep the means of production operable, a plan must be developed and placed into effect to increase reliability and reduce maintenance requirements. The arrow points to removing the necessity for work. We may call it upgrading, and this upgrading is a task as relevant for compressors as it is for any other equipment.

Making the task more difficult, all realize that allowable costs or monetary outlays are steadily declining, for the reasons mentioned earlier. Many companies attempt to reach industry cost norms by imposing arbitrary cuts. Industry-best companies recognize that improving conditions that necessitate spending is the only real way to meet cost objectives. It stands to reason that this thinking might also affect the maintenance departments responsible for compressor-related tasks. However, any cutbacks must be made with considerable forethought and should be discussed with experienced reliability professionals.

Although there are a number of areas in which to seek cost improvements, staffing level (headcount) reduction is always the most apparent and sensitive. Industry-best companies formulate a long-term staffing plan based on cost objectives, labor costs, and the division between labor and materials for the local area (approximately 50%–50% in North America).

With a typical industry-best objective of 60% work originated by *preventive* and *condition-based maintenance,* 25 to 30% *planned corrective maintenance,* and 10 to 15% *unplanned maintenance*, it is relatively easy to calculate overall staffing levels and specific specialties to fit the new cost objectives. Most who have performed this analysis again recognize the necessity of safely eliminating work—and the need for spending—as the only way to reach the objective.

As a facility determines the level of affordable or necessary compressor maintenance, it is not atypical to learn that current preventive maintenance (PM) requirements cannot be fulfilled within the constraints of hours available. PM requirements obviously have to be reduced. A complete review for value contributed, potential substitution of condition-based routines, and optimization of task and interval are the first steps along this path. Next, the organization has to understand where component upgrade measures could reduce or even eliminate both the activity (procedure) and frequency of maintenance effort typically expended. As was brought out in an earlier chapter, component upgrade measures authorized and implemented before issuance of purchase orders are generally the most cost effective.

In any discussion of staff levels to meet profit objectives, the reduction in professional staff must be mentioned. Whereas even a modest-sized facility used to have technical experts in a variety of disciplines, these people—if present at all today—are very often overcommitted. There is little time for professional study and advancement or even identification of risk and opportunity as precursors to the development of well-thought-out upgrading (i.e., permanent improvement initiatives). Many facilities and companies that profess a commitment to becoming industry-best will not allow technical professionals to attend conferences and seminars. Conference participation, *networking*, the learning opportunities gained through the exchange of ideas and successes combined with the enthusiasm and heightened motivation that always results from peer discussions, far outweigh the cost and perceived "loss" of time. Conference participation is definitely a solid value opportunity in the asset-optimization continuous-improvement culture required for business success.

Proficient at the Basics: Suitable and Intelligent Management Processes, Practices, and Technology Industry-best organizations are highly skilled in all the basics and consistently meet highest quality standards. Although value and requirements are well known, there are still plants that don't have a formal process for planning and scheduling work, a functional computerized maintenance management system, or standard repair procedures to assure quality. Some use crude methods of repair that virtually guarantee a short operating life, such as hammer blows to install bearings and/or heating bearings with open-flame acetylene torches to open the clearance so that they can be pushed on the shaft. Needless to say, such practices truly jeopardize compressor safety and reliability and have no place in a reliability-focused plant.

Industry-best facilities do much better. At industry-best facilities, processes, practices, procedures and detailed task instructions are in place and utilized effectively for work planning, scheduling and fulfillment, spares management, and corrective maintenance. The application and use of preventive and condition-based maintenance and root cause failure analysis are all defined with standard procedures. Industry-best will be aware of best practice benchmarks in all aspects of their operations. They will consistently track current performance and compare it to industry benchmarks and key organizational objectives.

SIDEBAR: WHEN TO UPGRADE

Industry-best view every maintenance event as an opportunity to upgrade. They have positioned themselves to ask two questions and receive rapid and accurate answers to each. Question 1: Is an upgrade feasible? Question 2: If the answer is yes, is it cost-justified? If an upgrade is cost-justified, it will be pursued. Quite obviously, if an upgrade measure is cost-justified and yet not pursued, the organization risks losing its momentum and—compared to best-of-class—might well begin a backward slide in performance.

Optimized Lifetime Cost One of the earlier chapters dealt with compressor procurement and installation topics; most of the others dealt with compressor design. It can thus be inferred that large portions of lifetime cost and availability are determined during design, procurement, and installation. Indeed, this fact is clearly recognized by a reliability-focused culture. One study disclosed that approximately 20% of total maintenance costs could be avoided by appropriate design-related decisions. Another study concluded that design-related decisions affect 65% of future maintenance and operating costs. Additional effects often occur due to changes in operation. The industry-best reliability-driven organization recognizes that defects due to faulty design and installation, including those brought about by off-design operation, must be eliminated. In some cases, materials must be upgraded. Occasionally, components, perhaps even entire equipment, will have to be replaced.

> As an example, deep-well centrifugal pumps were originally installed on the outlet from a large atmospheric storage tank. The deep well pumps proved very unreliable. Failures typically occurred after approximately six months of service and were costly to repair. A design review disclosed that the deep-well design was deemed necessary in the event that the tank, filled with a gas-saturated liquid, had to be pumped empty. In practice, neither condition occurred. Looking at realistic operating requirements the solution was evident: Replace the deep-well pumps with, in this instance, the far-more-reliable in-line pumps. Although the in-line pumps weren't capable of meeting the original design specifications, they proved more than adequate for the service, far more reliable, and much less costly under actual conditions.
>
> A second example: Variable-speed dc motors were unreliable and costly to maintain. Replacing the dc motors with variable-frequency ac motors essentially eliminated the problems. The ac motors proved orders of magnitude more reliable, far less costly to maintain, and paid back the investment for replacement by increased production and reduced costs in less than a year.

Both cases illustrate the advantages of looking beyond maintenance to lifetime reliability and cost. In the two cases cited, would a conventional maintenance improvement program have led to the conclusion to replace assets that had proven unreliable, or would it have concocted more extensive and costly monitoring and maintenance actions to mitigate design deficiencies?

Operating errors, including missing or incorrect procedures and inadequate training, are another significant source of excessive cost and degraded availability. There have been numerous cases where an investigation of failures occurring at startup revealed a design that was fine for operation but lacked critical provisions for startup. Postfailure analyses conducted on equipment operating at high temperatures occasionally find no provisions for preheating. Unanticipated pressure imbalances at startup were responsible for thrust bearing failures and total destruction of two centrifugal compressors. Similarly, some positive displacement machines lack provisions for starting at less than full system pressure. Proper venting is another commonly encountered deficiency on fluid machinery. To emphasize an earlier point, the solution is a failure analysis and correction culture that looks at the entire system, not just the part that failed as a consequence of flaws elsewhere. The best of the best constantly ask why an event might occur and what could be done to prevent reoccurrence plantwide.

Ready Availability of Data and Information Improvement initiatives depend on data. Within the best of the best, data are readily available. Although data access is not always easy, smart organizations find ways to circumvent access problems. Smart organizations even find ways to outflank less than responsive information technology (IT) departments with inexpensive data transfers to readily available commercial databases. From there, bright professionals can spend time most productively quickly analyzing cost and availability history to identify improvement opportunities with commercial software tools such as Microsoft Excel.

> As stated by the maintenance superintendent in a world-class refinery: “The road to solutions begins with identifying issues—and that requires accurate data.”

Reliability Improvement Teams Industry-best facilities will have action teams identifying reliability improvement opportunities and producing results. Teams evaluate risk, identify and prioritize opportunities using availability and cost benchmarks, and are empowered to implement improvement initiatives. Teams are typically composed of four to six permanent members. They are of multidiscipline type, with members from production, maintenance (mechanical and controls), and engineering. Additional personnel with complementary knowledge and additional talent are brought in when required. The leader or a designated member will identify opportunities for improvement based on factors such as excessive cost, emergency work orders, and/or downtime. It is often the case that “bad actor” systems and equipment will have the dubious honor of appearing high in all three categories. Team members collectively develop improvement initiatives along with metrics (objectives) in terms of both cost results and time needed to achieve results.

Opportunities for improvement are selected for implementation based on value and time (return). The team lists strengths to build on, barriers to success, and a desired end state (objective). One team in a large chemical plant committed to reducing unscheduled downtime by 50%, improving cost performance by the same percentage within a year.

Once action plans are developed and agreed upon, responsibility is assigned for implementation. The person responsible for implementation also reports results, along with any problems, back to the team, typically at monthly intervals.

Accountability at All Levels Within an industry-best organization, the person actually performing a task has accountability for successful completion. Responsibility–accountability–support–consult–information (RASCI) matrices are typically used for unambiguous definition. Industry-best organizations resist the temptation to “downskill” the most highly proficient personnel. When asked why a highly skilled technical support engineer was required to witness routine reassembly tasks on critical equipment, the answer was that the engineer was being held accountable. He, and only he, would be the person to suffer if a gasket wasn’t installed properly or bolts not fully torqued. With accountability shifted in this fashion, there doesn’t seem to be much incentive for a craft mechanic to pay any attention to quality.

The same applies to supervision. The time is long past when a first-line supervisor can participate directly in each task being worked by his or her crew. Industry-best organizations implement training that equips people to perform high-quality work. Industry-best firms trust that those assigned a task will perform it correctly and will ask for help when uncertain; similarly with management. When a manager ignores a well-explained risk or potential problem or refuses to authorize mitigating action for any reason, including a lack of funding, he or she must be held accountable for the consequences. Note, however, the term *well-explained*. This task must be assigned to an equipment specialist, and he or she has to state the case clearly and if at all possible, with supporting documentation.

21.2.2 Conclusions

In every industry we find a group or groups of best performers. Although not every organization can or will be a best performer, all participants in compressor life-extension efforts must endeavor to reach or approach industry-best benchmark performance. Anything less in the current competitive environment may initiate severe cost reductions (job losses) or even a permanent shutdown.

Over the past several years it has become apparent that industry-best performers share many characteristics. Workshops and discussions reveal that all are aware of best practices, skilled and proficient in every aspect of their operations. All are at or near the top of industry benchmarks for results in every category, including safety, health, environmental performance, operating, maintenance, and business. The best are learning organizations, always improving, never satisfied with current performance. They are also the happiest and most profitable.

Workshops reveal that organizational, cultural, and communications issues are nearly always the greatest barriers to achieving industry-best performance. Further, midlevel managers and technical staff are unanimous in their belief that a culture of trust, empowered ownership, and understanding is essential to gain best performance. These key personnel are in universal agreement that dictating improvement by arbitrary reductions or other measures is largely ineffectual. Real improvements in operating and business results are achieved by first identifying gaps to best practice and then implementing the tangible and well-defined improvements to culture and process necessary to close the gap. Within the industry-best organization, everyone is either already (or must become) aware of the impact of "surprise" failures and must endeavor to eliminate defects before they become failures. When all is said and done, it is really not the compressor's fault if it breaks down. Somebody made a decision, committed an error, overlooked something, made a choice—usually a choice with reliability impact.

As one production vice president commented, "You can't starve into prosperity." So the solution followed by many industry leaders is to become reliability oriented, pushing responsibility for improvement down into the organization, where real institutional knowledge and ownership can produce solid results and value. Utilizing people most effectively is one of the keys to lasting success. Accept that your people have the ability to think and are excited to participate in activities that are challenging and make their jobs easier, more enjoyable, and more secure.

All who have followed this path recognize that improvement isn't utopia; resistance can be expected from people who are uncomfortable with change. If you are part of leadership, please recognize that leadership is quite different from management. People are hungry for leaders who show them how to do the right things and encourage success. In this case, the right thing is inspiration to attain excellence in every activity.

REFERENCES

1. H. P. Bloch, Consider a low-maintenance compressor, *Chemical Engineering,* July 18, 1988.
2. Bently-Nevada *Corporation, System 1, Release 2.0*, Bently-Nevada, Minden, Nev., 1998.
3. Prognost GmbH, *Prognost System for Reciprocating Compressors,* Prognost, Rheine, Germany, 2004.
4. H. P. Bloch and F. K. Geitner, *An Introduction to Machinery Reliability Assessment,* Van Nostrand Reinhold, New York, 1990.
5. R. B. Abernethy, *The New Weibull Handbook,* self-published, 1988.
6. James E. Corley, Troubleshooting turbomachinery problems using a statistical analysis of failure data, *Proceedings of the 19th Texas A&M University Turbomachinery Symposium,* September, 1990.
7. J. S. Mitchell, *Physical Asset Management Handbook*, 3rd Ed., Clarion Technical Publishers, Houston, Tex., 2002.

APPENDIX A

PROPERTIES OF COMMON GASES

A Practical Guide to Compressor Technology, Second Edition, By Heinz P. Bloch

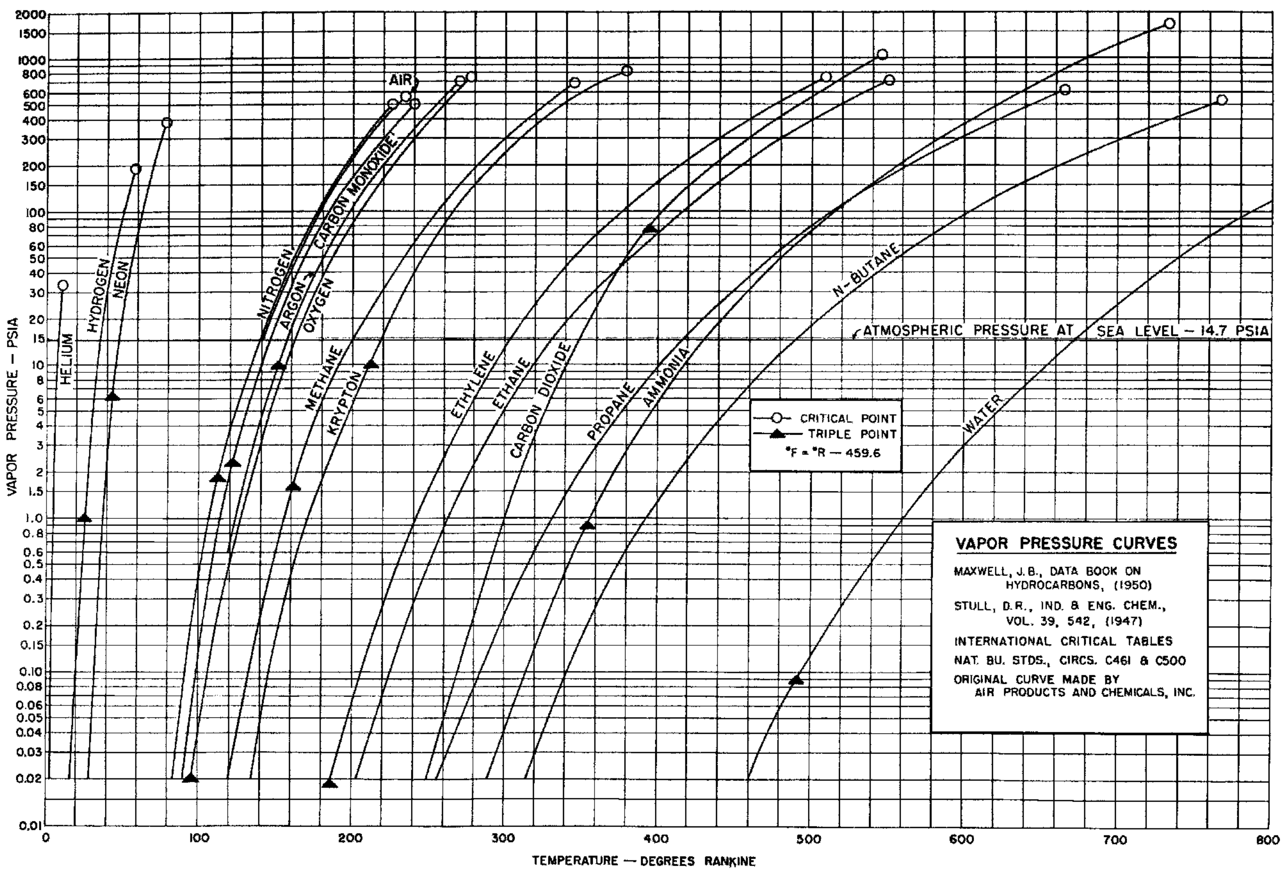

FIGURE A.1 Vapor pressure curves for common pure gases.

TABLE A.1 Properties of Hydrocarbon and Special Refrigerant Vapors

					Values at 14.696 psia and 60°F			Specific Heat at Constant Pressure at 14.696 psia (Btu/lb-°F)				Ratio of Specific Heats $K = C_p/C_v$ at 14.696 psia					Critical Conditions	
Gas	Chemical Formula	Alternate Designation	Molecular Weight	Boiling Point at 14.696 psia (°F)	Specific Gravity (Air =1.00)	Density (lb/ft^3)	Specific Volume (ft^3/lb)	−40°F	60°F	150°F	300°F	−40°F	60°F	150°F	300°F	Molar Heat at Capacity at 150°F and 14.696 psia (Btu/°F-mol)	Temperature (°R)	Pressure (psia)
Methane	CH_4	C_1	16.04	−259	0.555	0.0424	23.61	0.506	0.527	0.558	0.624	1.33	1.31	1.29	1.25	8.95	344	673
Acetylene	C_2H_2	—	26.04	−119	0.899^a	0.0686^a	14.58^a	0.353	0.397	0.427	0.469	1.31	1.26	1.24	1.21	11.12	557	905
Ethylene	C_2H_4	Ethene	28.05	−155	0.969^a	0.0739^a	13.53^a	0.312	0.362	0.406	0.478	1.29	1.24	1.21	1.17	11.39	510	742
Ethane	C_2H_6	C_2	30.07	−128	1.047	0.0799	12.52	0.365	0.410	0.458	0.543	1.22	1.19	1.17	1.14	13.77	550	708
Propylene	C_3H_6	Propene	42.08	−54	1.453^a	0.1109^a	9.021^a	0.303	0.354	0.399	0.473	1.18	1.15	1.14	1.11	16.79	657	667
Propane	C_3H_8	C_3	44.09	−44	1.547	0.1180	8.471	0.333	0.389	0.443	0.534	1.16	1.13	1.11	1.09	19.53	666	617
Butadiene 1, 2	C_4H_6	—	54.09	+51	1.867^a	0.1425^a	7.018^a	—	0.346	0.387	0.451	—	1.12	1.11	1.09	20.93	799	653
Butadiene 1, 3	C_4H_6	—	54.09	+24	1.867^a	0.1425^a	7.018^a	—	0.341	0.392	0.468	—	1.12	1.10	1.09	21.26	766	628
Isobutylene	C_4H_8	—	56.10	+20	1.937^a	0.1478^a	6.766^a	—	0.370	0.419	0.493	—	1.11	1.09	1.08	23.51	753	580
Butylene	C_4H_8	1-Butene	56.10	+21	1.937^a	0.1478^a	6.766^a	—	0.355	0.406	0.484	—	1.11	1.10	1.08	22.78	756	583
Isobutane	C_4H_{10}	i-C_4	58.12	+11	2.068	0.1578	6.339	—	0.387	0.443	0.535	—	1.10	1.08	1.07	25.75	735	529
n-Butane	C_4H_{10}	*n*-C_4	58.12	+31	2.071	0.1581	6.327	—	0.391	0.444	0.532	—	1.10	1.08	1.07	25.81	766	551
Isopentane	C_5H_{12}	i-C_5	72.15	+82	2.491^a	0.190^a	5.262^a	—	0.401^b	0.439	0.529	—	1.07^b	1.07	1.06	31.67	830	483
n-Pentane	C_5H_{12}	*n*-C_5	72.15	+97	2.491^a	0.190^a	5.262^a	—	0.410^b	0.441	0.528	—	1.07^b	1.07	1.06	31.82	846	489
Benzene	C_6H_6	—	78.11	+176	2.697^a	0.206^a	4.860^a	—	0.301^b	—	0.360	—	1.09^b	—	1.08	23.51	1012	714
n-Hexane	C_6H_{14}	*n*-C_6	86.17	+156	2.975^a	0.227^a	4.406^a	—	0.443^b	—	0.526	—	1.06^b	—	1.05	38.17	915	440
n-Heptane	C_7H_{16}	*n*-C_7	100.20	+209	3.459^a	0.264^a	3.789^a	—	0.474^b	—	0.525	—	1.04^b	—	1.04	47.49	973	397
n-Octane	C_8H_{18}	*n*-C_8	114.22	+258	3.943^a	0.301^a	3.324^a	—	0.449^b	—	0.524	—	1.04^b	—	1.03	57.00	1025	362
Refrigerant 11^c	CCl_3F	—	137.38	+75	4.78^b	0.365^b	2.739^b	—	0.134^b	0.141	0.156	—	1.14^b	1.13	1.10	19.37	848	635
Refrigerant 12^c	CCl_2F_2	—	120.92	−22	4.27	0.326	3.067	—	0.145^d	—	—	—	1.14^d	—	—	17.53^d	694	597
Refrigerant 13^c	$CClF_3$	—	104.47	−115	3.62	0.276	3.624	0.133	0.150	0.164	0.183	1.17	1.15	1.13	1.12	17.13	544	561
Refrigerant 21^c	$CHCl_2F$	—	102.93	+48	3.63	0.277	3.608	—	0.136	0.148	0.169	—	1.18	1.16	1.13	15.23	813	750
Refrigerant 22^c	$CHClF_2$	—	86.48	−41	3.05	0.233	4.299	—	0.149	0.161	0.182	—	1.20	1.17	1.14	13.92	665	716
Refrigerant 113^c	$C_2Cl_3F_3$	—	187.39	+118	6.04^b	0.461^b	2.169^b	—	0.159^b	0.162	0.179	—	1.08^b	1.08	1.07	30.36	877	495
Refrigerant 114^c	$C_2Cl_2F_4$	—	170.93	+38	6.08	0.464	2.155	—	0.157	0.168	0.188	—	1.09	1.08	1.07	28.72	754	474

[a] At a perfect gas; [b] At the boiling point; [c] This group of refrigerants is known by trade names such as Freon and, Genetron; [d] At 86°F.

TABLE A.2 Properties of Miscellaneous Gases

					Values at 14.696 psia and 60°F			Specific Heat at Constant Pressure at 14.696 psia (Btu/lb-°F)				Ratio of Specific Heats $K = C_p/C_v$ at 14.696 psia					Critical Conditions	
Gas	Chemical Formula	Alternate Designation	Molecular Weight	Boiling Point at 14.696 psia (°F)	Specific Gravity (Air = 1.00)	Density (lb/ft^3)	Specific Volume (ft^3/lb)	−40°F	60°F	150°F	300°F	−40°F	60°F	150°F	300°F	Molar Heat at Capacity at 150°F and 14.696 psia (Btu/°F-mol)	Temperature (°R)	Pressure (psia)
Air (dry)^a	—	—	28.97	−318	1.000	0.0763	13.106	0.240	0.240	0.241	0.243	1.40	1.40	1.40	1.39	6.98	239	547
Ammonia	NH_3	—	17.03	−28	0.594	0.0454	22.05	—	0.506	0.525	0.556	—	1.30	1.30	1.27	8.94	730	1639
Argon	Ar	—	39.94	−303	1.380	0.1053	9.497	0.125	0.125	0.125	0.124	1.67	1.67	1.67	1.67	4.99	272	705
Carbon dioxide	CO_2	—	44.01	−109	1.528	0.1166	8.576	0.189	0.201	0.213	0.254	1.34	1.30	1.28	1.25	9.37	548	1073
Carbon monoxide	CO	—	28.01	−312	0.967	0.0738	13.55	0.249	0.248	0.249	0.252	1.40	1.40	1.40	1.40	6.97	242	507
Chlorine	Cl_2	—	70.91	−30	2.48	0.1886	5.30	—	0.115	—	—	—	1.35	—	—	8.15^b	751	1119
Ethylene oxide	CH_2CH_2O	—	44.05	+51	1.52	0.116	8.62	0.225^c	0.264^c	0.302^c	0.355^c	1.25^c	1.21^c	1.19^c	1.15^c	14.10	844	1043
Helium	He	—	4.003	−451	0.138	0.01054	94.91	—	—	1.248^d	—	—	—	1.66^d	—	5.00	24^e	151^e
Hydrogen	H_2	—	2.016	−423	0.0696	0.00531	188.32	3.324	3.409	3.442	3.462	1.42	1.41	1.40	1.40	6.94	83^e	327^e
Hydrogen chloride	HCl	—	36.47	−121	1.271	0.0970	10.31	—	0.194	—	—	—	1.41	—	—	7.08^b	585	1200
Hydrogen sulfide	H_2S	—	34.08	−79	1.175	0.0897	11.15	0.233	0.238	0.243	0.251	1.34	1.33	1.32	1.30	8.28	673	1306
Methyl chloride	CH_3Cl	—	50.49	−11	1.777	0.1356	7.372	—	0.199^f	—	—	—	1.29^f	—	—	10.05^f	749	969
Neon	Ne	—	20.19	−411	0.697	0.0532	18.81	0.246	0.246	0.246	—	1.66	1.66	1.66	—	4.97	80	385
Nitric oxide	NO	—	30.01	−240	1.038	0.0792	12.62	0.239	0.238	0.238	0.239	1.38	1.39	1.39	1.38	7.14	323	956
Nitrogen	N_2	—	28.02	−320	0.967	0.0738	13.55	0.249	0.249	0.249	0.250	1.40	1.40	1.40	1.40	6.98	227	492
Nitrous oxide	N_2O	—	44.02	−127	1.531	0.1168	8.56	—	0.21	—	—	—	1.30	—	—	9.24^b	558	1054
Oxygen	O_2	—	32.00	−297	1.105	0.0843	11.86	0.218	0.219	0.221	0.226	1.40	1.40	1.39	1.38	7.07	278	732
Phosgene	$COCl_2$	—	98.92	+46	3.41	0.262	3.82	0.123	0.136	0.146	0.158	1.19	1.17	1.16	1.14	14.44	820	823
Sulfur dioxide	SO_2	—	64.06	+14	2.254	0.1720	5.814	—	0.147	—	—	—	1.25	—	—	9.42^b	775	1142
Toluene	$CH_3C_6H_5$	—	92.13	+231	3.181^g	0.243^g	4.121^g	—	0.346^h	—	0.379	—	1.07^h	—	1.06	31.87	1069	611
Water vapor	H_2O	Steam	18.02	+212	0.632^h	0.0373^h	26.80^h	—	0.496^h	—	0.55^i	—	1.32^h	—	1.31^i	8.94	1165	3187

[a] *Normal atmospheric air* contains some moisture. For convenience it is common to consider that, at 68°F and 14.696 psia, the air is at 36 percent relative humidity, weighs 0.075 lb/ft^3, and has a k value of 1.395. (Based on ASME Test Code for Displacement Compressors.); [b] At 60°F; [c] Within ±5%; [d] An average for 0–300°F.

[e] These are *effective values* to be used only for generalized compressibility charts and gas mixtures. Actual values are:

	T_c (°R)	p_c (psia)
Helium	9.7	33.2
Hydrogen	59.7	188

[f] At 77°F; [g] As a perfect gas; [h] At the boiling point; [i] Approximate average for 212–600°F and 14.7–200 psia.

The generalized charts (Figs. A.2 through A.5) are redrawn by permission from those developed by L. C. Nelson and E. F. Obert and presented at the 1953 Annual ASME meeting. They were published in *Chemical Engineering* in July 1954, from which article Dresser-Rand (formerly Ingersoll-Rand) replotted these curves.

Four charts, based on a study of experimental data on 30 gases, have been prepared to cover a wide range of values. Although steam (H_2O) and ammonia (NH_3) were considered, they do not coordinate well, and since excellent tables and charts of their properties are available, their specific rather than generalized data should be used at all times. Hydrogen and helium also cannot be correlated well with these charts, particularly below $T_r = 2.5$, unless *effective* or pseudocritical conditions are used in place of the *actual* critical conditions. Effective conditions are given below—for use *only* with generalized charts. These are as developed in 1960 by John M. Lenior, University of Southern California, Los Angeles, in the case of hydrogen and by E. F. Obert in his 1953 paper in the case of helium.

A.1 EFFECTIVE CRITICAL CONDITIONS

Helium	$T_c = 24°R$	$p_c = 151$ psia
Hydrogen	$T_c = 83°R$	$p_c = 327$ psia

Note, however that three of these noncomformist gases have been included among the more accurate specific gas compressibility curves and one should always use the latter when suitable.

The four generalized charts cover the following ranges of reduced pressure and reduced temperature. The maximum indicated deviation from experimental data is also shown.

Chart	Range p_r	Range T_r	Max. Error (%)
1	0–0.65	0.7–5.0	1.0
2	0–6.5	1.0–15.0	2.5
3	6–12.5	1.0–15.0	2.5
4	10–42.5	1.0–15.0	5

A.2 OUTLINE OF PROCEDURE

1. Calculate pseudocritical temperature and pressure for a given gas mixture using the method outlined later in the text (see “Gas Mixtures”). If working with a pure gas rather than a mixture look up the critical temperature and pressure in Table A.1 or A.2.
2. If interested in compressibility at discharge conditions, estimate the discharge temperature T_2 from the following formula for adiabatic compression:

$$T_2 = T_1 r^{(k-1)/k}$$

3. Calculate the reduced temperature and pressure for the conditions in question using Eqs. (1.19) and (1.20).
4. Read the compressibility factor Z from the applicable generalized chart on the following pages.
5. Use this compressibility factor in the proper formula to determine volume or horsepower.

Example A.1 *Find the compressibility factors at inlet and discharge conditions for the following gas mixture when compressed from 315 psia and 100°F to 965 psia.*

Gas component	H_2	N_2	CO_2	CO
Mol %	61.4	19.7	17.5	1.4

Step 1: See Section 1.19.

Pseudocritical temperature = 195°R
Pseudocritical pressure = 493 psia

Step 2: Calculate the theoretical discharge temperature.

$r = 965/315 = 3.06$
$k = 1.37$ (see Section 1.18)
Theoretical discharge temperature, T_2 = 758°R (298°F)

Step 3:

	Inlet	Discharge
Pressure, psia	315	965
Temperature, °R	560	758
Reduced pressure	0.64	1.96
Reduced temperature	2.87	3.88
Compressibility (from Fig. A.3)	1.002	1.025

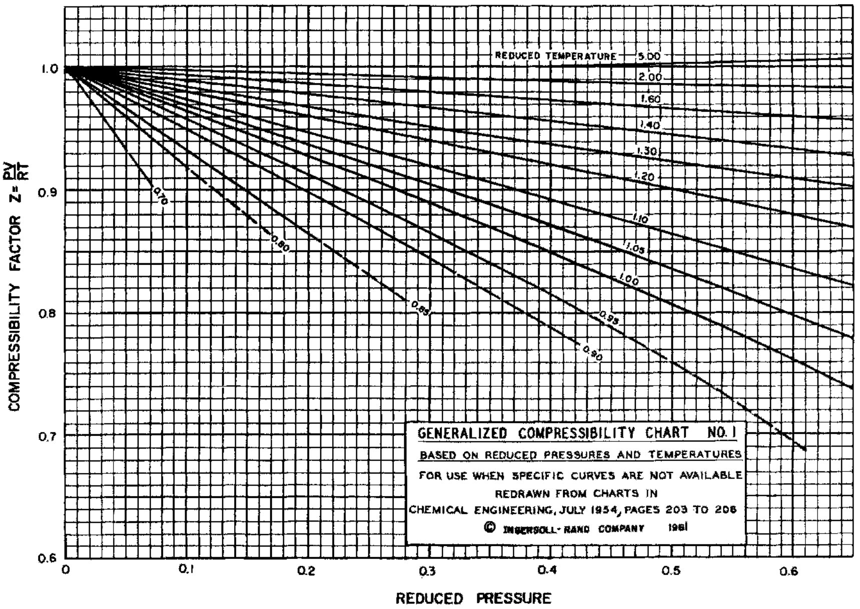

FIGURE A.2 Generalized compressibility chart for low values of reduced pressure.

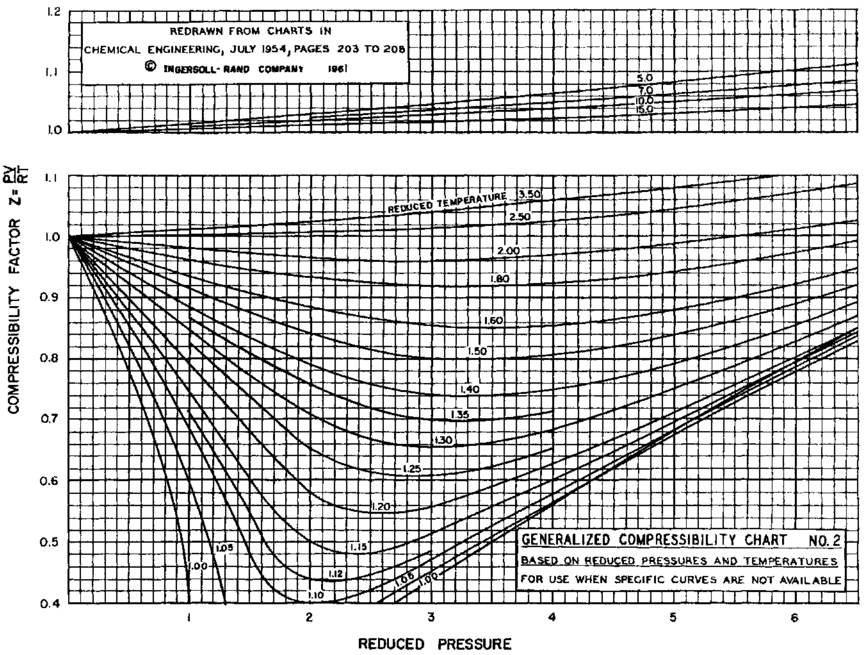

FIGURE A.3 Generalized compressibility charts for medium values of reduced pressure.

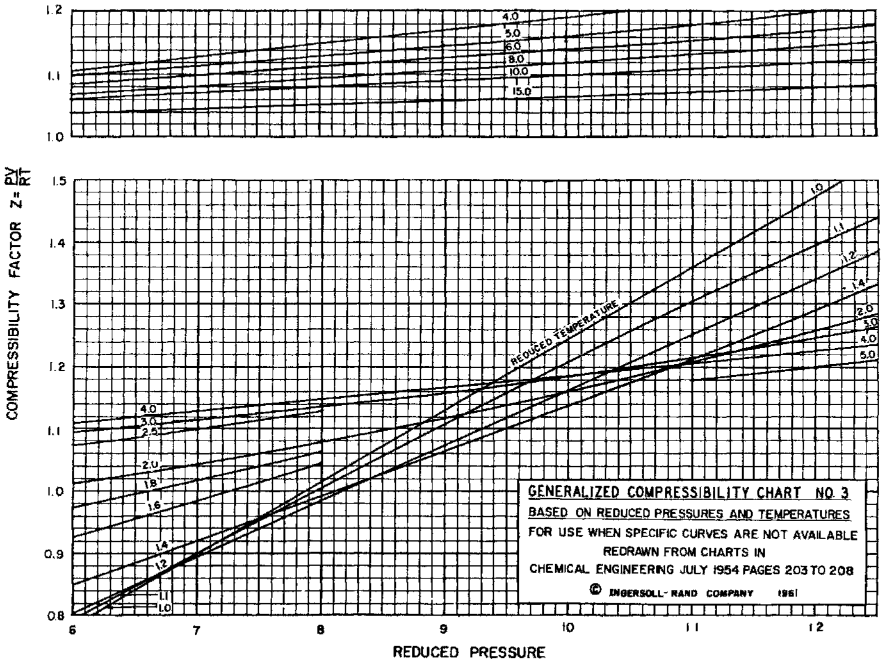

FIGURE A.4 Generalized compressibility chart for moderately high values of reduced pressure.

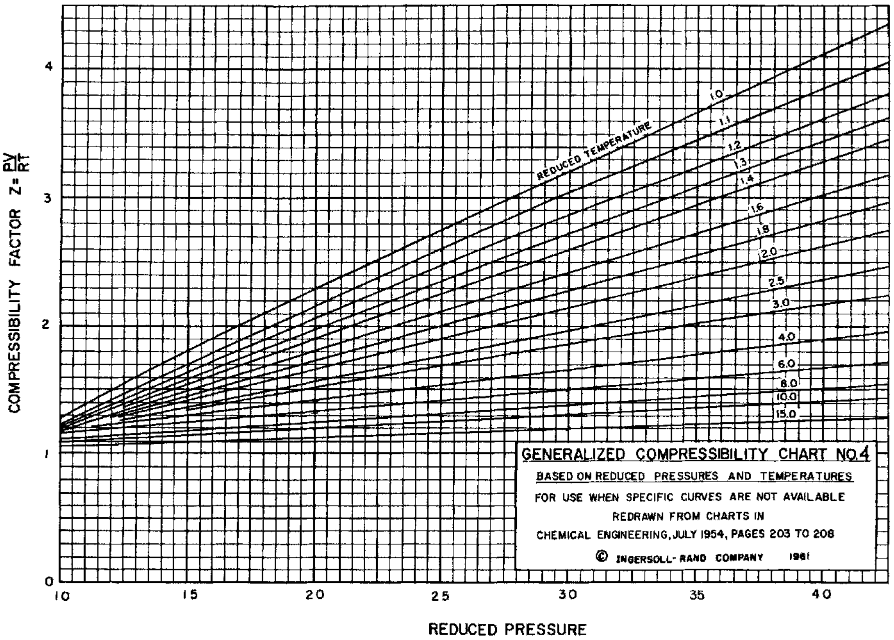

FIGURE A.5 Generalized compressibility chart for very high values of reduced pressure.

APPENDIX B

SHORTCUT CALCULATIONS AND GRAPHICAL COMPRESSOR SELECTION PROCEDURES

B.1 SELECTION GUIDE FOR ELLIOTT MULTISTAGE CENTRIFUGAL COMPRESSORS*

Thermodynamics

Compressor performance cannot be accurately predicted without detailed knowledge of the behavior of the gas or gases involved.

Mollier diagrams, of course, are readily available for most pure gases at "conventional" pressures and temperatures. However, in cryogenic areas or at very high pressure, some gases behave most peculiarly. Gas properties in these areas heretofore have been estimates arrived at through rather empirical methods.

The same is true of mixtures of gases, yet the preponderance of gas compression problems involve gas mixtures.

Through the knowledge and skill of Elliott thermodynamicists, the behavior of a wide variety of gases—in any conceivable mixture—can now be accurately computed, plotted and offered to the process engineer. This knowledge has been computerized, and in minutes, made available as an actual Mollier diagram.

The only input required to obtain a plot of gas behavior is the identity and proportion of the gases involved (if a gas mix), and the limiting pressure and temperature values.

---

* Reprinted from a 1994 Elliott Company sales bulletin. The reference information contained herein is provided as an assist to developing your application. However, Elliott reserves the right to modify the design or construction of the equipment described and to furnish it, as altered, without further reference to the illustrations or information contained herein.

A Practical Guide to Compressor Technology, Second Edition, By Heinz P. Bloch

Performance calculations and selection of Elliott multistage compressors

Introduction

These are basic procedures that will help you to calculate compressor performance and estimate the right unit in your installation. The data herein cover most applications; unusual or special problems can be referred to your Elliott Representative.

Our computer, too, is ready and willing to assist you. From worldwide sales offices, we can access the main computer at the factory and thus eliminate many routine and time-consuming calculations. A good example of this would be the selection of an optimum compressor/driver arrangement, which requires analysis of many alternatives and especially so when high power and multiple-casing train setups are involved.

Another time-saver worthy of mention is the high degree of standardization of Elliott compressor frames, impellers, seals, bearings and even mechanical-drive turbines. Many of these components are computerized to enable you to evaluate various alternatives in a minimum of time.

Calculation methods

The calculation procedures on the following pages apply to "straight" compression—the compression of a certain gas from a given suction pressure to a desired discharge pressure.

The methods outlined are:

1. The "N" method (so named because of the extensive use of the polytropic exponent "n"). It is used
a. when the fluid to be compressed closely approximates a "perfect" gas (air, nitrogen, oxygen, hydrogen).
b. when a chart of the properties of the gas or gas mixture is not available.

2. The "Mollier" method which involves use of a Mollier diagram and is used whenever a plot of the properties of the fluid being compressed is available.

Note that the final computerized selections use computerized data bases of actual impeller performance characteristics as well as sophisticated real-gas equations of state.

Thermodynamic equations

Fan Laws

Fan laws have been developed to estimate performance of centrifugal compressors for operating conditions other than design. These are approximate calculations and as such, can be used to estimate off-design parameters.

The fan laws are:

1. $Q \quad \alpha N$
2. $H \quad \alpha N^2$
3. $\ln r_p \quad \alpha N^2$
4. $\Delta T \quad \alpha N^2$
5. HP or kW αN^3

where Q = inlet volume flow
H = head
N = speed (r/min)
r_p = absolute pressure ratio (P_2/P_1)
ΔT = change in temperature
HP or kW = power

Flow Calculations

Compressor flow conditions are often expressed in different forms, most common of which are:

1. Weight flow—lb/min, lb/h (kg/min, kg/h)
2. SCFM—60°F, 14.7 psia and dry
3. number of mols/h

None of these flows can be used directly in calculating compressor performance. All must be converted to ACFM—actual cubic feet per minute. This is also commonly referred to as ICFM—inlet cubic feet per minute.

These conversions are:

$$ACFM = w \times v$$

$$ACFM = SCFM \times \frac{P_s}{P_1} \times \frac{T_1}{T_s} \times \frac{Z_1}{Z_s}$$

$$ACFM = \text{no. of mols/ min} \times MW \times v$$

w = weight flow—lb/min (kg/min)
v = inlet specific volume—ft³/lb (m³/kg)
P_s = standard pressure—usually 14.7 psi (1.013 bar) absolute
P_1 = inlet pressure—psi (bar) absolute
T_s = standard temperature—usually 520°R
T_1 = inlet temperature—°R
Z_1 = inlet compressibility
Z_s = standard compressibility—always 1.0
MW = molecular mass

Gas Mixtures

Properties of a gas mixture necessary to select a compressor are:

1. Gas constant (dependent on molecular mass MW)
2. k (c_p and c_v)
3. P_1, T_1, v_1 and P_2
4. Compressibility, Z
5. Critical pressure, P_c
6. Critical temperature, T_c

Of the above properties of a gas mixture, MW, c_p, c_v, P_c, and T_c, are calculated by adding the products of the individual mol fractions of each constituent, times its specific property. The temperature of any constituent is obviously the temperature of the mixture. The v (specific volume) of the mixture is obtained from $Pv = ZRT$. The compressibility of a mixture is obtained from Chart 1, using the calculated values of P_c and T_c. The k of a mixture is determined from

$$k = \frac{\Sigma Mcp}{\Sigma Mcp - 1.985}$$

The ΣMcp is the summation of the mol fraction times the molal ΣMcp of each constituent. The table below can be used to calculate the properties of a gas mixture.

Gas Mixture	(1) Mol% each gas	(2) Mols/h each gas	(3) Mol Mass (Table 1)	(4) (1) × (3)	(5) Mass %	(6) T_c (Table 1)	(7) P_c (Table 1)	(8) (1) × (6)	(9) (1) × (7)	(10) Mcp (Table 1)	(11) (1) × (10)
....	....	....	....	a	a/d × 100	....	....	....	....	....	....
....	....	....	....	b	b/d × 100	....	....	....	....	....	....
....	....	....	....	c	c/d × 100	....	....	....	....	....	....
Calculate $k_{(mixture)} = \frac{\Sigma Mcp_{(mix)}}{\Sigma Mcp—1.985}$				d				....	....		....
				Apparent Mol Mass of Mixture				$T_{c\,(mix)}$	$P_{c\,(mix)}$		ΣMcp

Determine the compressibility of the mixture Z_1 by finding the reduced temperature T_{R1} and the reduced pressure P_{R1} as follows:

$$T_{R1} = \frac{T_1}{T_{c\,(mix)}} \qquad P_{R1} = \frac{P_1}{P_{c\,(mix)}}$$

Then enter these values on Chart 1 to find Z.

Chart 1 Generalized compressibility chart

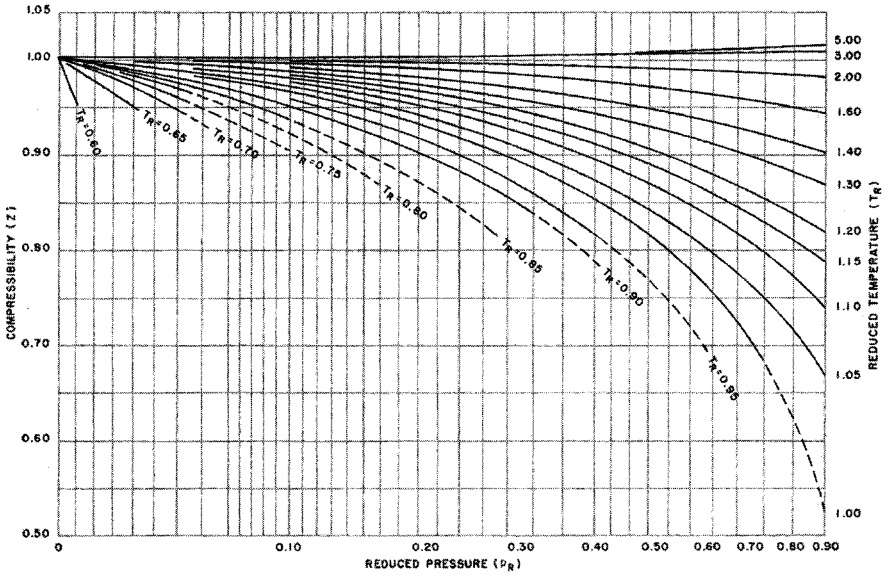

Chart 2 Polytropic to adiabatic efficiency conversion.

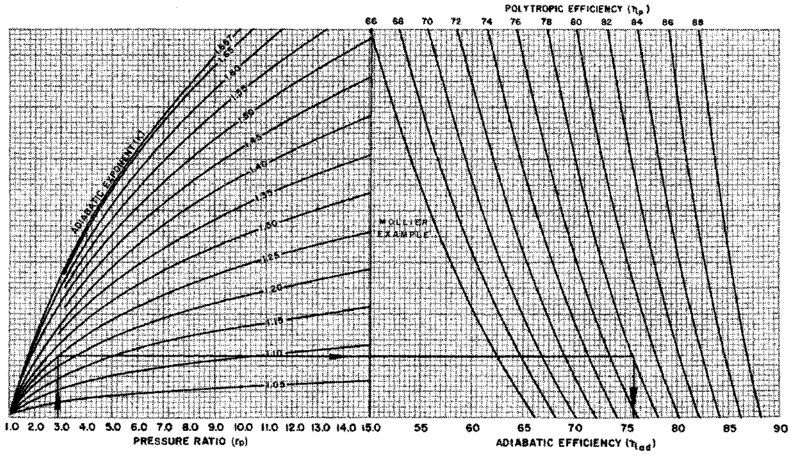

ENGLISH SECTION

English Units

Table 1 Gas Properties

(Most values taken from Natural Gas Processors Suppliers Association Engineering Data Book—1972, Ninth Edition)

Gas or Vapor	Hydrocarbon Reference Symbols	Chemical Formula	Molecular Mass	Specific Heat Ratio $k = c_p/c_v$ at 60°F	Critical Conditions		*Mcp	
					Absolute Pressure p_c (psia)	Absolute Temperature T_c (°R)	at 50°F	at 300°F
Acetylene	$C_2=$	C_2H_2	26.04	1.24	905	557	10.22	12.21
Air		N_2+O_2	28.97	1.40	547	239	6.95	7.04
Ammonia		NH_3	17.03	1.31	1636	731	8.36	9.45
Argon		A	39.94	1.66	705	272	4.97	4.97
Benzene		C_6H_6	78.11	1.12	714	1013	18.43	28.17
Iso-Butane	iC_4	C_4H_{10}	58.12	1.10	529	735	22.10	31.11
n-Butane	nC_4	C_4H_{10}	58.12	1.09	551	766	22.83	31.09
Iso-Butylene	iC_4—	C_4H_8	56.10	1.10	580	753	20.44	27.61
Butylene	nC_4—	C_4H_8	56.10	1.11	583	756	20.45	27.64
Carbon Dioxide		CO_2	44.01	1.30	1073	548	8.71	10.05
Carbon Monoxide		CO	28.01	1.40	510	242	6.96	7.03
Carbureted Water Gas (1)		-	19.48	1.35	454	235	7.60	8.33
Chlorine		Cl_2	70.91	1.36	1119	751	8.44	8.52
Coke Oven Gas (1)		-	10.71	1.35	407	197	7.69	8.44
n-Decane	nC_{10}	$C_{10}H_{22}$	142.28	1.03	320	1115	53.67	74.27
Ethane	C_2	C_2H_6	30.07	1.19	708	550	12.13	16.33
Ethyl Alcohol		C_2H_5OH	46.07	1.13	927	930	17	21
Ethyl Chloride		C_2H_5Cl	64.52	1.19	764	829	14.5	18
Ethylene	C_2—	C_2H_4	28.05	1.24	742	510	10.02	13.41
Flue Gas (1)			30.00	1.38	563	264	7.23	7.50
Helium		He	4.00	1.66	33	9	4.97	4.97
n-Heptane	nC_7	C_7H_{16}	100.20	1.05	397	973	39.52	53.31
n-Hexane	nC_6	C_6H_{14}	86.17	1.06	440	915	33.87	45.88
Hydrogen		H_2	2.02	1.41	188	60	6.86	6.98
Hydrogen Sulphide		H_2S	34.08	1.32	1306	673	8.09	8.54
Methane	C_1	CH_4	16.04	1.31	673	344	8.38	10.25
Methyl Alcohol		CH_3OH	32.04	1.20	1157	924	10.5	14.7
Methyl Chloride		CH_3Cl	50.49	1.20	968	750	11.0	12.4
Natural Gas (1)		-	18.82	1.27	675	379	8.40	10.02
Nitrogen		N_2	28.02	1.40	492	228	6.96	7.03
n-Nonane	nC_9	C_9H_{20}	128.25	1.04	345	1073	48.44	67.04
Iso-Pentane	iC_5	C_5H_{12}	72.15	1.08	483	830	27.59	38.70
n-Pentane	nC_5	C_5H_{12}	72.15	1.07	489	847	28.27	38.47
Pentylene	C_5—	C_5H_{10}	70.13	1.08	586	854	25.08	34.46
n-Octane	nC_8	C_8H_{18}	114.22	1.05	362	1025	43.3	59.90
Oxygen		O_2	32.00	1.40	730	278	6.99	7.24
Propane	C_3	C_3H_8	44.09	1.13	617	666	16.82	23.57
Propylene	C_3—	C_3H_6	42.08	1.15	668	658	14.75	19.91
Blast Furnace Gas (1)		-	29.6	1.39	—	—	7.18	7.40
Cat Cracker Gas (1)		-	28.83	1.20	674	515	11.3	15.00
Sulphur Dioxide		SO_2	64.06	1.24	1142	775	9.14	9.79
Water Vapor		H_2O	18.02	1.33	3208	1166	7.98	8.23

(1) Approximate values based on average composition.

*Use straight line interpolation or extrapolation to approximate Mcp (in btu/mol-°R) at actual inlet T. For greater accuracy, average T should be used.

Table 2 M-Line & MB-Line Frame Data

Frame	Nominal Flow Range (cfm)	Nominal Max No. of Casing Stages	Max Casing Pressure (psig)	Nominal Speed (r/min)	Nominal Polytropic Efficiency	Nominal H/N^2 (per stage)	Maximum Q/N
29M	750 - 9,500	10	750	11,500	0.78	7.5×10^{-5}	0.83
38M	6,000 - 22,000	9	625	7,725	0.79	1.52×10^{-4}	2.85
46M	16,000 - 34,000	9	625	6,300	0.80	2.28×10^{-4}	5.40
60M	25,000 - 58,000	8	325	4,700	0.81	3.85×10^{-4}	12.34
70M	50,000 - 84,000	8	325	4,200	0.81	5.67×10^{-4}	20.
88M	70,000 - 135,000	8	325	3,160	0.81	9.1×10^{-4}	42.7
103M	110,000 - 160,000	8	45	2,800	0.82	11.6×10^{-4}	57.1
110M	140,000 - 190,000	8	45	2,600	0.82	13.4×10^{-4}	73.1
10MB	90 - 1,600	12	10,000	18,900	0.77	2.6×10^{-5}	0.085
15MB	200 - 2,350	12	10,000	15,300	0.77	3.6×10^{-5}	0.153
20MB	325 - 3,600	12	10,000	12,400	0.77	6.2×10^{-5}	0.29
25MB	500 - 5,500	12	10,000	10,000	0.78	9.5×10^{-5}	0.55
32MB	2,000 - 8,000	10	10,000	8,300	0.78	1.39×10^{-4}	0.96
38MB	6,000 - 22,000	9	1,500	7,725	0.79	1.52×10^{-4}	2.85
46MB	16,000 - 34,000	9	1,200	6,300	0.79	2.28×10^{-4}	5.40
60MB	25,000 - 58,000	8	800	4,700	0.80	3.85×10^{-4}	12.34
70MB	50,000 - 84,000	8	800	4,200	0.80	5.67×10^{-4}	20.

(1) Number of casing stages is determined by critical speed margins. These numbers are a general guideline only.

(2) These values are typical. Flexibility in types of available staging can allow final computer selections to have significant variations in head and efficiency.

Selection Procedure

English Units

Step 1:
If MW, k, and Z are not given, determine gas mixture properties. By using the procedure and data on Pages 3 and 5, most gas compositions can be analyzed. For single gases or an analysis that has one gas consisting of up to 95% by volume, check to see if a Mollier Diagram is included, and use the Mollier method.

Step 2:
Calculate inlet volume flow (ACFM). Using the gas composition data from Step 1 and the relationships below or the Mollier charts, find the inlet volume entering the compressor. Note that for very large volumes and lower head requirements, compressors can have the flow divided in half having two inlets (double flow), one at each end of the machine. This gives the flexibility of having a smaller frame size handling larger volumes of flow. This can be important in a multi-body string such as a feed gas string in an ehtylene plant, or whenever a match in speed with other compressors or a particular driver is desired.

Step 3:
Select the compressor frame size. Using the inlet volume calculated in Step 2, enter Table 2 and select the proper frame size. Table 2 also contains other pertinent frame data to be used in the selection procedure.

Step 4:
Calculate the total head requirement. In order to determine the number of compression stages, it is necessary to know the total required head. It is important to remember that in a machine with more than one section, it is more accurate to total the heads from the various sections than to make an overall estimate.

Step 5:
Calculate the total number of casing stages. Reference the average H/N^2 values in Table 2. Multiply this by the speed squared (begin with nominal speed unless speed is fixed) to find an average amount of head developed by the impellers. Divide the total head requirement by this to determine the approximate number of casing stages.

Step 6:
Adjust the speed by using fan law relationships to agree with required discharge conditions.

Step 7:
The gas power (GHP) should be adjusted for balance piston or equalizing line leakage. For estimating purposes, we assume this to be a 2% increase. Mechanical losses can then be added to obtain shaft power (SHP).

Rough Out Example (N-method)

1) Given the following customer conditions

$w_1 = 1769$ lb/min   MW = 29
$P_1 = 80$ psia $k = 1.4$
$T_1 = 90°$ F (550° R) $Z = 1.0$
$P_2 = 225$ psia

2) Calculate inlet volume

$$v_1 = \frac{ZRT_1}{144\ P_1} = \frac{1.0\ (1545)\ (550)}{144\ (29)\ (80)} = 2.544\ \text{ft}^3/\text{lb}$$

$$Q = w_1 \times v_1 = 1769 \times 2.544 = 4500\ \text{ICFM}$$

3) Select compressor frame size
Based on an inlet volume of 4500 ICFM and knowing the required discharge pressure is 225 psia select a 29M frame size from Table 2.

4) Calculate the required head
Assume an efficiency of 0.78 from Table 2 and calculate the polytropic exponent.

$$\frac{n}{n-1} = \left(\frac{k}{k-1}\right)\eta_p = \left(\frac{1.4}{0.4}\right) 0.78 = 2.73$$

Calculate the overall head

$$H = ZRT\ \frac{n}{n-1}\left[\frac{P_2}{P_1}^{\frac{n-1}{n}} - 1\right]$$

$$= 1.0\ \frac{(1545)}{29}\ (550)\ (2.73)\left[\frac{225}{80}^{0.3663} - 1\right]$$

$$H = 36837\ \frac{\text{ft-lb}_f}{\text{lb}_m}$$

Check the discharge temperature for a need to intercool (Cool if $T_2 > 400°$ F)

$$\frac{T_2}{T_1} = \left(\frac{P_2}{P_1}\right)^{\frac{n-1}{n}} = \left(\frac{225}{80}\right)^{0.3663} = 1.461$$

$$T_2 = 550\ (1.461) = 803°\text{R} = 343°\text{F}$$

No iso-cooling is therefore required.

5) Determine the number of casing stages.
From Table 2 the nominal speed for a 29M is 11500 r/min. Calculate the $Q_{/N}$

$$Q_{/N} = \frac{4500}{11500} = 0.391$$

From Table 2 $H_{/N^2} = 7.5 \times 10^{-5}$

$H_{/\text{stage}}$ would then be

$$H_{/N^2} \times N^2 = (7.5 \times 10^{-5})\,(11500)^2 = 9919\ \frac{\text{ft-lb}_f}{\text{lb}_m}$$

Determine approximate number of casing stages.

$$\text{Number of stages} = \frac{36837}{9919} = 3.71 \cong 4\ \text{stages}$$

6) Adjust Speed
Adjust the nominal speed according to the casing stages.

$$4\ \text{stages must develop}\ 36837\ \frac{\text{ft-lb}_f}{\text{lb}_m}$$

$$\text{or an average of}\ \frac{36837}{4} = 9209\ \frac{\text{ft-lb}_f}{\text{lb}_m}\ \text{per stage.}$$

Using Fan Law relationships adjust the speed.

$H \alpha N^2$

$$N = N_{NOM}\left[\frac{H_{REQ'D}}{H}\right]^{1/2} = 11500\left[\frac{9209}{9919}\right]^{1/2}$$

$N = 11{,}081$ r/min

7) Calculate the approximate power

$$GHP = \frac{w_1 \times H}{33000 \times \eta_p} = \frac{1769 \times 36837}{33000 \times 0.78} = 2532\text{HP}$$

Adjust for balance piston leakage
2532 × 1.02 = 2583HP

Add losses from Chart 4
SHP = 2583 + 78 = 2661HP
(Assume Iso-Carbon Seal)

English Units

Rough Out Example (Mollier)

1) Given the following customer conditions

$w_1 = 1769$ lb/min
$P_1 = 80$ psia
$T_1 = 90°F\ (550°R)$
$P_2 = 225$ psia

Gas: ethylene

2) Calculate inlet volume

$v_1 = 2.6$ (from Mollier chart)
$Q = w_1 \times v_1 = 1769 \times 2.6 = 4600$ ICFM

3) Select compressor frame size

Based on an inlet volume of 4600 ICFM and knowing the required discharge pressure is 225 psia select a 29M frame size from Table 2.

4) Calculate the required head

At given inlet conditions, determine inlet entropy (s) and enthalpy (h) from Mollier chart:

$P_1 = 80 \quad T_1 = 90 \quad s_1 = 1.75 \quad h_1 = 163$

At required discharge pressure and constant entropy ($s_1 = s_2$), determine h_2 from chart

$P_2 = 225 \quad T_{2_i} = \text{N/A} \quad s_2 = 1.75 \quad h_{2_i} = 205$

Head required $= 778\,(h_{2_i} - h_1)$

$$H = 778\,(205 - 163) = 32676 \ \frac{\text{ft-lb}_f}{\text{lb}_m} \quad \text{(adiabatic)}$$

Check the discharge temperature for a need to intercool. (Cool if $T_2 > 400°F$)

Step 1 Determine adiabatic efficiency

$$r_p = \frac{225}{80} = 2.81 \quad k = 1.24 \quad \eta_p = 0.78$$

$\eta_{AD} = 0.76$ from Chart 2

Step 2 determine actual (not isentropic) Δh.

$$\Delta h = \frac{h_{2_i} - h_1}{\eta_{AD}} = \frac{205-163}{0.76} = 55.3$$

Step 3 Determine h_2 and read T_2 from Mollier Chart.

$h_2 = h_1 + \Delta h = 163 + 55.3 = 218.3$
$T_2 = 232°F$ (from Mollier chart)

No iso-cooling is therefore required.

5) Determine the number of casing stages.

From Table 2 the nominal speed for a 29M is 11500 RPM. Convert adiabatic head to polytropic head by the ratio of efficiencies.

$H = 32676\,(0.78/0.76) = 33536$

From Table 2 $H/_{N^2} = 7.5 \times 10^{-5}$

$H/_{\text{stage}}$ would then be

$$H/_{N^2} \times N^2 = (7.5 \times 10^{-5})\,(11500)^2 = 9919 \ \frac{\text{ft-lb}_f}{\text{lb}_m}$$

Determine approximate number of casing stages.

$$\text{Number of stages} = \frac{33536}{9919} = 3.38 \cong 4 \text{ stages}$$

6) Adjust Speed

Adjust the nominal speed according to the casing stages.

4 stages must develop $33536 \ \frac{\text{ft-lb}_f}{\text{lb}_m}$

or an average of $\frac{33536}{4} = 8384 \ \frac{\text{ft-lb}_f}{\text{lb}_m}$ per stage.

Using Fan Law relationships adjust the speed.

$H \,\alpha\, N^2$

$$N = N_{NOM} \left[\frac{H_{REQ'D}}{H}\right]^{1/2} = 11500 \left[\frac{8384}{9919}\right]^{1/2} = 10573$$

7) Calculate the approximate power

$$GHP = \frac{w_1 \times H}{33000 \times \eta_p} = \frac{1769 \times 33536}{33000 \times 0.78} = 2305\text{HP}$$

Adjust for balance piston leakage

$2305 \times 1.02 = 2351\text{HP}$

Add losses from Chart 4.

$SHP = 2351 + 70 = 2421\text{HP}$
(Assume Iso-Carbon Seal)

English Units

Mechanical Losses

Chart 3

LABYRINTH, DRY CARBON RING
OR GAS FACE SEAL

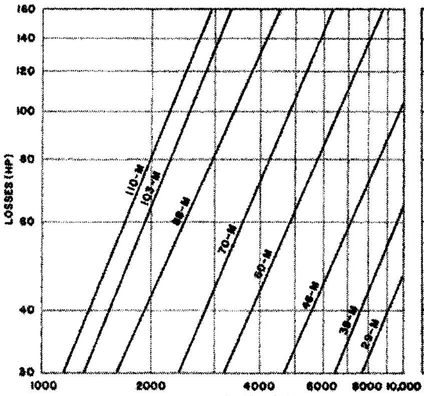

For 10MB, 15MB and 20MB, use 40 HP for losses.

Chart 4

ISO-CARBON OR ISO-SLEEVE SEAL

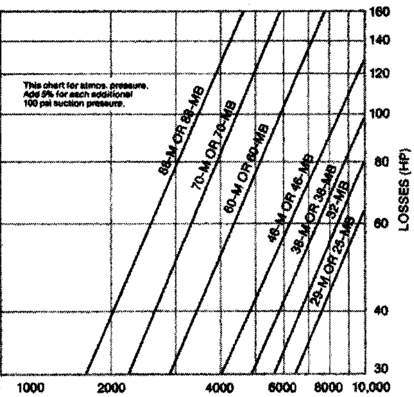

This chart for atmos. pressure. Add 5% for each additional 100 psi suction pressure.

METRIC SECTION

Metric Units

Table 3 Gas Properties

(Most values taken from Natural Gas Processors Suppliers Association Engineering Data Book—1972, Ninth Edition)

Gas or Vapor	Hydrocarbon Reference Symbols	Chemical Formula	Molecular Mass	Specific Heat Ratio $k=c_p/c_v$ at 15.5°C	Critical Conditions		*Mcp	
					Absolute Pressure p_c (bar)	Absolute Temperature T_c (K)	at 0°C	at 100°C
Acetylene	$C_2=$	C_2H_2	26.04	1.24	62.4	309.4	42.16	48.16
Air		N_2+O_2	28.97	1.40	37.7	132.8	29.05	29.32
Ammonia		NH_3	17.03	1.31	112.8	406.1	34.65	37.93
Argon		A	39.94	1.66	48.6	151.1	20.79	20.79
Benzene		C_6H_6	78.11	1.12	49.2	562.8	74.18	103.52
Iso-Butane	iC_4	C_4H_{10}	58.12	1.10	36.5	408.3	89.75	116.89
n-Butane	nC_4	C_4H_{10}	58.12	1.09	38.0	425.6	93.03	117.92
Iso-Butylene	iC_4—	C_4H_8	56.10	1.10	40.0	418.3	83.36	104.96
Butylene	nC_4—	C_4H_8	56.10	1.11	40.2	420.0	83.40	105.06
Carbon Dioxide		CO_2	44.01	1.30	74.0	304.4	36.04	40.08
Carbon Monoxide		CO	28.01	1.40	35.2	134.4	29.10	29.31
Carbureted Water Gas (1)		-	19.48	1.35	31.3	130.6	31.58	33.78
Chlorine		Cl_2	70.91	1.36	77.2	417.2	35.29	35.53
Coke Oven Gas (1)		-	10.71	1.35	28.1	109.4	31.95	34.21
n-Decane	nC_{10}	$C_{10}H_{22}$	142.28	1.03	22.1	619.4	218.35	280.41
Ethane	C_2	C_2H_6	30.07	1.19	48.8	305.6	49.49	62.14
Ethyl Alcohol		C_2H_5OH	46.07	1.13	63.9	516.7	69.92	81.97
Ethyl Chloride		C_2H_4Cl	64.52	1.19	52.7	460.6	59.61	70.16
Ethylene	C_2—	C_2H_4	28.05	1.24	51.2	283.3	40.90	51.11
Flue Gas (1)			30.00	1.38	38.8	146.7	30.17	30.98
Helium		He	4.00	1.66	2.3	5.0	20.79	20.79
n-Heptane	nC_7	C_7H_{16}	100.20	1.05	27.4	540.6	161.20	202.74
n-Hexane	nC_6	C_6H_{14}	86.17	1.06	30.3	508.3	138.09	174.27
Hydrogen		H_2	2.02	1.41	13.0	33.3	28.67	29.03
Hydrogen Sulphide		H_2S	34.08	1.32	90.0	373.9	33.71	35.07
Methane	C_1	CH_4	16.04	1.31	46.4	191.1	34.50	40.13
Methyl Alcohol		CH_3OH	32.04	1.20	79.8	513.3	42.67	55.32
Methyl Chloride		CH_3Cl	50.49	1.20	66.7	416.7	45.60	49.82
Natural Gas (1)		-	18.82	1.27	46.5	210.6	34.66	39.54
Nitrogen		N_2	28.02	1.40	33.9	126.7	29.10	29.31
n-Nonane	nC_9	C_9H_{20}	128.25	1.04	23.8	596.1	197.07	253.10
Iso-Pentane	iC_5	C_5H_{12}	72.15	1.08	33.3	461.1	112.09	145.58
n-Pentane	nC_5	C_5H_{12}	72.15	1.07	33.7	470.6	115.21	145.94
Pentylene	C_5—	C_5H_{10}	70.13	1.08	40.4	474.4	102.11	130.37
n-Octane	nC_8	C_8H_{18}	114.22	1.05	25.0	569.4	176.17	226.17
Oxygen		O_2	32.00	1.40	50.3	154.4	29.17	29.92
Propane	C_3	C_3H_8	44.09	1.13	42.5	370.0	68.34	88.68
Propylene	C_3—	C_3H_6	42.08	1.15	46.1	365.6	60.16	75.70
Blast Furnace Gas (1)		-	29.6	1.39	—	—	29.97	30.64
Cat Cracker Gas (1)		-	28.83	1.20	46.5	286.1	46.16	57.31
Sulphur Dioxide		SO_2	64.06	1.24	78.7	430.6	38.05	40.00
Water Vapor		H_2O	18.02	1.33	221.2	647.8	33.31	34.07

(1) Approximate values based on average composition.

*Use straight line interpolation or extrapolation to approximate Mcp [in kJ/(kmol·K)] at actual inlet T. For greater accuracy, average T should be used.

Table 4 M-Line & MB-Line Frame Data

Frame	Nominal Flow Range (m³/h)	Nominal Max No. of Casing Stages	Max Casing Pressure (bar)	Nominal Speed (r/min)	Nominal Polytropic Efficiency	Nominal H/N² (per stage)	Maximum Q/N
29M	1 275 - 16 140	10	52	11 500	0.78	2.25×10^{-4}	1.403
38M	10 200 - 37 380	9	43	7725	0.79	4.56×10^{-4}	4.84
46M	27 200 - 57 750	9	43	6300	0.80	6.84×10^{-4}	9.17
60M	42 500 - 98 550	8	23	4700	0.81	11.55×10^{-4}	20.97
70M	85 000 - 142 700	8	23	4200	0.81	17.01×10^{-4}	33.98
88M	119 000 - 229 400	8	23	3160	0.81	27.3×10^{-4}	72.6
103M	186 900 - 272 000	8	3	2800	0.82	34.8×10^{-4}	97.
110M	237 900 - 323 000	8	3	2600	0.82	40.2×10^{-4}	124.
10MB	150 - 2 700	12	690	18 900	0.77	8.0×10^{-5}	0.14
15MB	340 - 4 000	12	690	15 300	0.77	10.8×10^{-5}	0.26
20MB	550 - 6 120	12	690	12 400	0.77	18.6×10^{-5}	0.49
25MB	850 - 9 345	12	690	10 000	0.78	28.5×10^{-5}	0.94
32MB	3 400 - 13 600	10	690	8300	0.78	4.2×10^{-4}	1.64
38MB	10 200 - 37 380	9	103	7725	0.79	4.56×10^{-4}	4.84
46MB	27 200 - 57 750	9	83	6300	0.79	6.84×10^{-4}	9.17
60MB	42 500 - 98 550	8	55	4700	0.80	11.55×10^{-4}	20.97
70MB	85 000 - 142 700	8	55	4200	0.80	17.01×10^{-4}	33.98

(1) Number of casing stages is determined by critical speed margins. These numbers are a general guideline only.

(2) These values are typical. Flexibility in types of available staging can allow final computer selections to have significant variations in head and efficiency

Selection Procedure

Step 1:
If MW, k, and Z are not given, determine gas mixture properties. By using the procedure and data on Pages 3 and 9, most gas compositions can be analyzed. For single gases or an analysis that has one gas consisting of up to 95% by volume, check to see if a Mollier Diagram is available, and use the Mollier method.

Step 2:
Calculate inlet volume flow (m³). Using the gas composition data from Step 1 and the relationships below or the Mollier charts, find the inlet volume entering the compressor. Note that for very large volumes and lower head requirements, compressors can have the flow divided in half having two inlets (double flow), one at each end of the machine. This gives the flexibility of having a smaller frame size handling larger volumes of flow. This can be important in a multi-body string such as a feed gas string in an ethylene plant, or whenever a match in speed with other compressors or a particular driver is desired.

Step 3:
Select the compressor frame size. Using the inlet volume calculated in Step 2, enter Table 4 and select the proper frame size. Table 4 also contains other pertinent frame data to be used in the selection procedure.

Step 4:
Calculate the total head requirement. In order to determine the number of compression stages, it is necessary to know the total required head. It is important to remember that in a machine with more than one section, it is more accurate to total the heads from the various sections than to make an overall estimate.

Step 5:
Calculate the total number of casing stages. Reference the average H/N² values in Table 4. Multiply this by the speed squared (begin with nominal speed unless speed is fixed) to find an average amount of head developed by the impellers. Divide the total head requirement by this to determine the approximate number of casing stages.

Step 6:
Adjust the speed by using fan law relationships to agree with required discharge conditions.

Step 7:
The gas power (GkW) should be adjusted for balance piston or equalizing line leakage. For estimating purposes, we assume this to be a 2% increase. Mechanical losses can then be added to obtain shaft power (SkW).

Rough Out Example (N-method)

1) Given the following customer conditions

$w_1 = 802.4$ kg/min   MW = 29
$P_1 = 5.5$ bar $k = 1.4$
$T_1 = 32°$ C (305 K) $Z = 1.0$
$P_2 = 15.52$ bar

2) Calculate inlet volume

$$v_1 = \frac{ZRT_1}{10^5 P_1} = \frac{1.0\,(8314)\,(305)}{10^5\,(29)\,(5.5)} = 0.159 \text{ m}^3/\text{kg}$$

$$Q = w_1 \times v_1 = 802.4 \times 0.159 = 127.6 \text{ m}^3/\text{min}$$
$$127.6 \times 60 = 7656 \text{ m}^3/\text{h}$$

3) Select compressor frame size
Based on an inlet volume of 7656 m³/h, and knowing the required discharge pressure is 15.52 bar, select a 29M frame size from Table 4.

4) Calculate the required head
Assume an efficiency of 0.78 from Table 4 and calculate the polytropic exponent.

$$\frac{n}{n\text{-}1} = \left(\frac{k}{k\text{-}1}\right)\eta_p = \left(\frac{1.4}{0.4}\right)0.78 = 2.73$$

Calculate the overall head

$$H = ZRT\,\frac{n}{n\text{-}1}\left[\frac{P_2}{P_1}^{\frac{n-1}{n}} - 1\right]$$

$$= 1.0\,\frac{(8314)}{29}\,(305)\,(2.73)\left[\frac{15.52}{5.5}^{0.3663} - 1\right]$$

$$H = 110\ 350\,\frac{\text{Nm}}{\text{kg}}$$

Check the discharge temperature for a need to intercool (Cool if $T_2 > 205°$ C)

$$\frac{T_2}{T_1} = \left(\frac{P_2}{P_1}\right)^{\frac{n-1}{n}} = \left(\frac{15.52}{5.5}\right)^{0.3683} = 1.462$$

$$T_2 = 305\,(1.462) = 446\text{K} = 173°\text{C}$$

No iso-cooling is therefore required.

5) Determine the number of casing stages.
From Table 4 the nominal speed for a 29M is 11 500 RPM. Calculate the $Q_{/N}$

$$Q_{/N} = \frac{7\,656}{11\,500} = 0.666$$

From Table 4 $H_{/N^2} = 2.25 \times 10^{-4}$

$H_{/\text{stage}}$ would then be

$$H_{/N^2} \times N^2 = (2.25 \times 10^{-4})\,(11\,500)^2 = 29\,756\,\frac{\text{Nm}}{\text{kg}}$$

Determine approximate number of casing stages.

$$\text{Number of stages} = \frac{110\ 350}{29\,756} = 3.71 \cong 4 \text{ stages}$$

6) Adjust Speed

Adjust the nominal speed according to the casing stages.

$$4 \text{ stages must develop } 110\ 350\,\frac{\text{Nm}}{\text{kg}}$$

$$\text{or an average of } \frac{110\,350}{4} = 27\,588\,\frac{\text{Nm}}{\text{kg}} \text{ per stage.}$$

Using Fan Law relationships adjust the speed.

$$H\ \alpha\ N^2$$

$$N = N_{NOM}\left[\frac{H_{REQ'D}}{H}\right]^{1/2} = 11\,500\left[\frac{27588}{29\,756}\right]^{1/2}$$

$$N = 11073\text{r/min}$$

7) Calculate the approximate power

$$\text{GkW} = \frac{w_1 \times H}{60\,000 \times \eta p} = \frac{(802.4)(110\ 350)}{(60\,000)\,(0.78)} = 1892\text{kW}$$

Adjust for balance piston leakage
1892 × 1.02 = 1930kW

Add losses from Chart 6
SkW = 1930 + 58 = 1988kW
(Assume Iso-Carbon Seal)

Metric Units

Rough Out Example (Mollier)

1) Given the following customer conditions

$w_1 = 802.4$ kg/min
$P_1 = 5.5$ bar
$T_1 = 32°C$ (305 K)
$P_2 = 15.52$ bar

Gas: ethylene

2) Calculate inlet volume

$v_1 = 0.163$ m³/kg (from Mollier chart)
$Q = w_1 \times v_1 = 802.4 \times 0.163 = 130.79$ m³/min
$130.79 \times 60 = 7847$ m³/h

3) Select compressor frame size

Based on an inlet volume of 7847 m³/h and knowing the required discharge pressure is 15.52 bar select a 29M frame size from Table 4.

4) Calculate the required head

At given inlet conditions, determine inlet entropy (s) and enthalpy (h) from Mollier chart:

$P_1 = 5.5$ bar $\quad T_1 = 32°C \quad s_1 = s_2 \quad h_1 = 379 \frac{kJ}{kg}$

At required discharge pressure and constant entropy ($s_1 = s_2$), determine h_2 from chart

$P_2 = 15.52 \quad T_{2_i} = N/A \quad s_2 = s_1 \quad h_{2_i} = 477 \frac{kJ}{kg}$

Head required $= 1000\ (h_{2_i} - h_1)$

$H = 1000\,(477 - 379) = 98000$ (adiabatic) $\frac{Nm}{kg}$

Check the discharge temperature for a need to intercool. (Cool if $T_2 > 205°C$)

Step 1 Determine adiabatic efficiency

$r_p = \frac{15.52}{5.5} = 2.82 \quad k = 1.24 \quad \eta_p = 0.78$

$\eta_{AD} = 0.76$ from Chart 2

Step 2 Determine actual (not isentropic) Δh

$$\Delta h = \frac{h_{2_i} - h_1}{\eta_{AD}} = \frac{(477-379)}{0.76} = 128.9$$

Step 3 Determine h_2 and read T_2 from Mollier Chart.

$h_2 = h_1 + \Delta h = 379 + 128.9 = 507.9$
$T_2 = 109°C$ (from Mollier chart)

No iso-cooling is therefore required.

5) Determine the number of casing stages.

From Table 4 the nominal speed for a 29M is 11 500 r/min. Convert adiabatic head to polytropic head by the ratio of efficiencies.

$H = 98000\,(0.78/0.76) = 100579 \frac{Nm}{kg}$

From Table 4 $H/_{N^2} = 2.25 \times 10^{-4}$

$H/_{stage}$ would then be

$H/_{N^2} \times N^2 = (2.25 \times 10^{-4})\,(11500)^2 = 29\,756 \frac{Nm}{kg}$

Determine approximate number of casing stages.

Number of stages $= \frac{100\,579}{29756} = 3.38 \cong 4$

6) Adjust Speed

Adjust the nominal speed according to the casing stages.

4 stages must develop $100579 \frac{Nm}{kg}$

or an average of $\frac{100579}{4}$ per stage. = 25145

Using Fan Law relationships adjust the speed.

$H \alpha N^2$

$$N = N_{NOM} \left[\frac{H_{REQ'D}}{H}\right]^{1/2} = 11\,500 \left[\frac{25145}{29756}\right]^{1/2}$$

$N = 10571$ r/min

7) Calculate the approximate power

$$GkW = \frac{w_1 \times H}{60\,000 \times \eta_p} = \frac{(802.4)\ (100579)}{(60000)\ (0.78)} = 1724\ kW$$

Adjust for balance piston leakage

$1724 \times 1.02 = 1759$ kW

Add losses from Chart 6

SkW = 1759 + 54 = 1813kW
(Assume Iso-Carbon Seal)

Metric Units

Mechanical Losses

Chart 5

LABYRINTH, DRY CARBON RING
OR GAS FACE SEAL

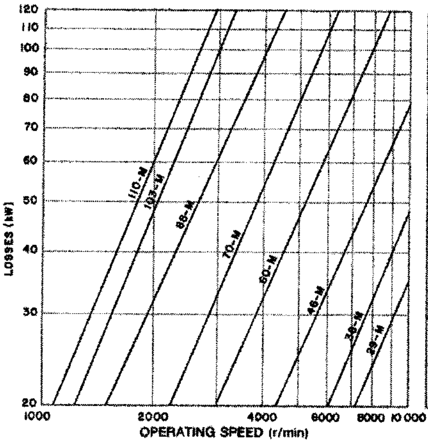

For 10MB, 15MB and 20MB, use 30 KW for losses

Chart 6

ISO-CARBON OR ISO-SLEEVE SEAL

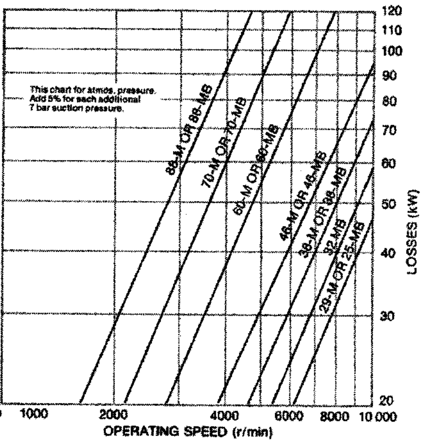

Approximate dimensions and weights

Vertically Split

English units

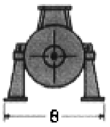

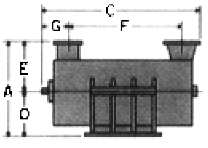

Straight-Through

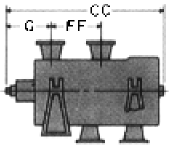

Back-to-Back
or Iso-Cooled

Technical Data

Elliott Compressor Frame	Material	(PSIG) Pressure Rating	* Total Weight lbs.		Nozzle Size		Rotation Facing inlet
			Three Stages	Each Add'l Stage	Inlet inches	Discharge inches	
15MB	Fgd. Steel	2000	5,035	350	6, 8	4, 6	CCW
15MBH	Fgd. Steel	4200	6,930	460	6, 8	4, 6	CCW
15MBHH	Fgd. Steel	7500	11,000	550	6, 8	4, 6	CCW
20MB	Plate	1500	9,560	660	8, 10	6, 8	CCW
20MBH	Fgd. Steel	4200	13,150	870	8, 10	6, 8	CCW
25MB	Fgd. Steel	1500					CW
		2000	18,140	1,250	14, 12, 10 or 8	10, 8 or 6	CCW
25MBH	Fgd. Steel	3150					CW
		4200	25,000	1,655	12, 10 or 8	8 or 6	CCW
25MBHH	Fgd. Steel	5150	38,500	1,475	10, 8 or 6	6 or 4	CW
		10000	53,200	5,100	8 or 6	6 or 4	CCW
32MB	Fgd. Steel	1500					CW
		2000	23,800	2,490	16, 14 or 12	12 or 10	
32MBH	Fgd. Steel	3150					CW
		4200	36,500	3,650	12, 10 or 8	8 or 6	
32MBHH	Fgd. Steel	10000	56,600	7,250	10 or 8	8 or 6	CW
38MB	Fgd. Steel	700	30,045	3,440	24, 20 or 16	16 or 14	CW
		1200	36,300	4,130	20 or 16	16 or 14	
		1500	51,300	5,250	16 or 14	14 or 12	CW
46MB	Fab. Steel	750	40,700	4,000	30 or 24	20 or 16	CW
		1200	50,700	4,800	24 or 20	26 or 14	
60MB	Fab. Steel	400	73,200	8,115	36 or 30	24 or 20	CW
		800	99,200	9,637	36 or 30	20 or 16	
70MB	Fab. Steel						CW
		800	152,300	18,800	42 or 36	30 or 24	
88MB	Fab. Steel						CW
		800	198,000	40,400	54 to 48	36 or 30	

NOTE: The drive end is normally the suction end.

*For back-to-back machines, add weight of two stages.

Approximate Dimensions (inches)

Elliott Compressor Frame	A	B	C	CC	Length Each Add'l Stage	D	E	F	FF	Length Each Add'l Stage	G
			Min. 3 Stages	Six Stages				Min. 3 Stages	Six Stages		
15MB	38	36	38.5	50	2.6	17	21	16	19	2.6	11
15MBH	39	38	40	52	2.6	17.5	21.5	16	21	2.6	13.75
15MBHH	45	41	48	61	3.3	22	23	17	23.5	3.3	19
20MB	47	44	48	62	3.2	21	26	19	23.5	3.2	13.75
20MBH	49	47	51	68	3.2	22	27	19	26	3.2	17
25MB	58	55	59	77	4	26	32	24	29	4	17
25MBH	60	58	63	84	4	27	33	24	32	4	21
25MBHH	69	63	73	93	5	34	35	26	36	5	29
	83	70	76	98	6	41	42	29	48	6	31
32MB	72	71	68	83	5	33	39	29	44	5	18
32MBH	75	74	74	88	6	34	41	31	46	6	21
32MBHH	86	88	82	95	6	39	47	34	50	6	34
38MB	76	79	80	116	8	36	40	33	63	8	18
	78	82	83	119	8	37	41	33	63	8	20
	86	90	95	128	8	41	45	37	71	8	32
46MB	86	109	92	137	9	38	48	43	88	9	24
	92	118	98	142	9	41	51	44	90	9	27
60MB	113	122	105	165	12	56	57	57	117	12	26
	125	134	111	171	12	62	63	59	119	12	28
70MB	134	142	142	217	15	66	68	70	147	15	41
88MB	146	160	152	252	20	69	77	89	192	20	51

Metric units

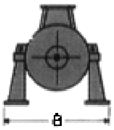

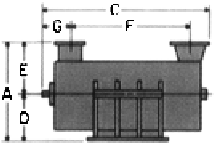

Straight-Through

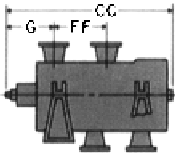

Back-to-Back or Iso-Cooled

Technical Data

Elliott Compressor Frame	Material	(BAR) Pressure Rating	* Total Weight kg		Nominal Nozzle Size				Rotation Facing Inlet
			Three Stages	Each Add'l Stage	Inlet		Discharge		
					inches	millimetres	inches	millimetres	
15MB	Fgd. Steel	138	2290	160	6, 8	152, 203	4, 6	102, 152	CCW
15MBH	Fgd. Steel	290	3150	210		152, 203		102, 152	CCW
15MBHH	Fgd. Steel	520	5000	250	6, 8	152, 203	4, 6	102, 152	CCW
20MB	Plate	103	4350	300	8, 10	203, 254	6, 8	152, 203	CCW
20MBH	Fgd. Steel	290	6000	400	8, 10	203, 254	6, 8	152, 203	CCW
25MB	Fgd. Steel	103							CW
		138	8250	570	14, 12, 10, 8	356, 305, 254, 203	10, 8, 6	254, 203, 152	CCW
25MBH	Fgd. Steel	217							CW
		290	11 315	750	12, 10, 8	305, 254, 203	8, 6	203, 152	CCW
25MBHH	Fgd. Steel	355	17 464	670	10, 8, 6	254, 203, 152	6, 4	152, 102	CW
		690	24 131	2310	8, 6	203, 152	6, 4	152, 102	CCW
32MB	Fgd. Steel	103							CW
		138	10 796	1130	16, 14, 12	406, 356, 305	12, 10	305, 254	
32MBH	Fgd. Steel	217							CW
		290	16 556	1655	12, 10, 8	305, 254, 203	8, 6	203, 152	
32MBHH	Fgd. Steel	690	25 674	3285	10, 8	254, 203	8, 6	203, 152	CW
38MB	Fgd. Steel	48	13 628	1558	24, 20, 16	610, 508, 406	16, 14	406, 356	CW
		83	16 467	1870	20, 16	610, 508, 406	16, 14	406, 356	
		103	23 270	2378	16, 14	406, 356	14, 12	356, 305	CW
46MB	Fab. Steel	52	18 458	1815	30, 24	762, 610	20, 16	508, 406	CW
		83	23 014	2175	24, 20	610, 508	26, 14	660, 356	
60MB	Fab. Steel	27	33 180	3676	36, 30	914, 762	24, 20	610, 508	CW
		55	44 998	4365	36, 30	914, 762	20, 16	508, 406	
70MB	Fab. Steel								CW
		55	69 083	8515	42, 36	1067, 914	30, 24	762, 610	
88MB	Fab. Steel								CW
		55	89 813	18 300	54, 48	1372, 1219	36, 30	914, 762	

NOTE: The drive end is normally the suction end.

*For back-to-back machines, add weight of two stages.

Approximate Dimensions (millimetres)

Elliott Compressor Frame	A	B	C	CC	Length Each Add'l Stage	D	E	F	FF	Length Each Add'l Stage	G
			Min. 3 Stages	Six Stages				Min. 3 Stages	Six Stages		
15MB	965	914	978	1270	66	432	533	406	483	66	279
15MBH	990	965	1016	1320	66	445	546	406	533	66	350
15MBHH	1143	1041	1219	1550	84	559	584	432	597	84	483
20MB	1194	1118	1219	1575	81	533	660	483	597	81	350
20MBH	1245	1194	1295	1725	81	559	686	483	660	81	432
25MB	1470	1400	1500	1960	100	660	810	610	740	100	430
25MBH	1520	1470	1600	2130	100	690	840	580	810	100	530
25MBHH	1750	1600	1850	2360	130	860	890	660	910	130	740
	2110	1780	1930	2490	150	1040	1070	740	1220	150	790
32MB	1830	1800	1730	2110	130	840	990	740	1120	130	460
32MBH	1900	1880	1880	2240	150	860	1040	790	1170	150	530
32MBHH	2180	2240	2080	2410	150	990	1190	860	1270	150	860
38MB	1930	2010	2030	2950	200	910	1020	840	1600	200	460
	1980	2080	2110	3020	200	940	1040	840	1600	200	510
	2180	2290	2410	3250	200	1040	1140	940	1800	200	810
46MB	2180	2770	2340	3480	230	970	1220	1090	2240	230	610
	2340	3000	2490	3610	230	1040	1300	1120	2290	230	690
60MB	2870	3100	2670	4190	300	1420	1450	1450	2970	300	660
	3180	3400	2820	4340	300	1570	1600	1500	3020	300	710
70MB	3400	3610	3610	5510	380	1680	1730	1780	3730	380	1040
88MB	3710	4060	3860	6400	510	1750	1960	2260	4880	510	1300

All dimensions and weights are approximate and to be used only for preliminary planning. See your Elliott Representative for more accurate data.

English units

Approximate dimensions and weights

Horizontally Split

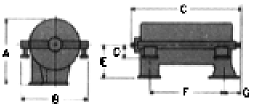

Straight-through compression

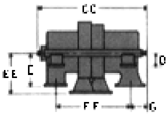

Iso-Cooled with external volutes

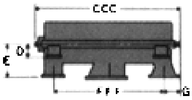

Iso-Cooled with internal volutes

Technical Data

Elliott Compressor Frame	Material	Min. Casing Length (stages)	Total Weight lbs.		Weight Heaviest Part, lbs.		Nozzle Size, inches		Rotation* Facing Inlet
			Min.	Add'l Stage	Min.	Add'l Stage	Inlet	Discharge	
29M	C.I.	3	8,405	886	3,855	400	16	6, 8 or 10	CW
	C.S.	3	8,052	935	3,855	400	16	6, 8 or 10	CW
	C.S.	3	9,025	1,034	4,915	500	16	6, 8 or 10	CW
	F.S.	3	9,025	1,034	4,915	500	12,8	8	CW
38M	C.I.	3	15,124	2,462	8,624	950	20	16	CW
	F.S.	3	15,597	2,276	7,953	850	20 or 24	16	CW
	F.S.	3	18,905	2,400	9,965	1,000	20 or 24	16	CW
46M	C.I.	2	23,534	2,992	10,350	1,800	24	20	CW
	F.S.	3	25,888	3,950	12,359	2,000	30	20	CW
	F.S.	3	29,954	4,189	15,072	2,300	30	20	CW
60M	C.I.	3	46,904	6,688	22,373	2,200	36	24	CW
	F.S.	3	41,861	6,688	20,409	2,500	36	24	CW
70M	C.I.	2	54,412	10,876	27,293	3,100	42	30	CW
	F.S.	2	59,616	11,952	30,021	3,400	42 or 48	30	CW
88M	C.I.	2	98,716	21,860	48,904	8,000	54 or 48	36 or 30	CW
	F.S.	2	105,305	24,290	52,531	8,200	54 or 48	36 or 30	CW
103M	C.I.	2	88.000	26.000	40,000	13,000	66 or 60	42	CCW
	F.S.	2	95.000	28,000	44,000	13,800	66 or 60	42	CCW
110M	C.I.	2	115,715	29,872	52,545	15.000	72	48	CCW
	F.S.	2	124,364	31,740	56,746	16,000	72	48	CCW

Approximate Dimensions (inches)

Elliott Compressor Frame	A	B	Overall Length				Nozzle Distance				G	E	EE	D
			C Min. Stages	CC Six Stages	CCC Four Stages	Each Add'l Stage	F Min. Stages	FF Six Stages	FFF Four Stages	Each Add'l Stage				
29M	61	58	52	74	—	4.5	24	38	—	4.5	17½	32	32	27
	61	58	52	74	—	4.5	24	38	—	4.5	17½	32	32	27
	61	58	52	74	—	4.5	24	38	—	4.5	18½	32	32	27
	61	58	52	74	—	4.5	24	38	—	4.5	18½	29	29	27
38M	68	83	65	86	—	7	31	52	—	7	20	35	35	27
	68	83	65	86	87	7	31	52	57	7	20	35	39	27
	68	83	65	86	87	7	31	52	57	7	21	35	39	27
46M	84	97	73	100	—	9	39	66	—	9	21	42	42	28
	71	79	87	114	119	9	39	66	69	9	22	44	52	22
	71	79	87	114	119	9	39	66	69	9	23	44	52	22
60M	124	119	105	141	—	12	51	86	—	12	22	68	68	24
	92	103	105	141	148	12	51	86	93	12	25	57	64	24
70M	146	131	103	148	—	15	50	95	—	15	30	80	84	22
	120	128	103	148	157	15	53	98	106	15	23	68	77	24
88M	125	131	115	175	—	20	65	123	—	20	24	72	75	24
	142	131	115	171	161	20	65	123	127	20	24	84	96	24
103M	141	144	131	194	—	21	71	132	—	21	23	78	84	24
	156	148	133	194	198	21	71	132	139	21	27	82	102	24
110M	158	176	128	210	—	24	83	155	—	24	25	92	98	24
	177	176	130	210	222	24	83	155	162	24	29	94	114	24

*The normal drive end is the discharge end. For units requiring opposite rotation, the drive end is the suction end.

Metric units

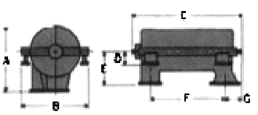

Straight-through
compression

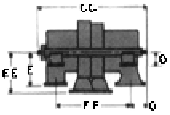

Iso-Cooled
with external volutes

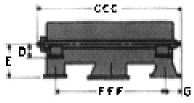

Iso-Cooled
with internal volutes

Technical Data

Elliott Compressor Frame	Material	Min. Casing Length (stages)	Total Weight kg		Weight, Heaviest Part kg		Nominal Nozzle Size				Rotation* Facing Inlet
							Inlet		Discharge		
			Min.	Add'l Stage	Min.	Add'l Stage	inches	millimetres	inches	millimetres	
29M	C.I.	3	3813	402	1749	180	16	406	6, 8, 10	152, 203, 254	CW
	C.S.	3	3652	424	1749	180	16	406	6, 8, 10	152, 203, 254	CW
	C.S.	3	4093	469	2229	230	16	406	6, 8, 10	152, 203, 254	CW
	F.S.	3	4093	469	2229	230	12.8	305, 203	8	203,	CW
38M	C.I.	3	6860	1117	3912	430	20	508	16	406	CW
	F.S.	3	7075	1032	3607	390	20, 24	508, 610	16	406	CW
	F.S.	3	8575	1089	4520	450	20, 24	508, 610	16	406	CW
46M	C.I.	2	10 675	1357	4695	820	24	610	20	508	CW
	F.S.	3	11 743	1792	5606	910	30	762	20	508	CW
	F.S.	3	13 587	1900	6837	1040	30	762	20	508	CW
60M	C.I.	3	21 276	3034	10 148	1000	36	914	24	610	CW
	F.S.	3	18 988	3034	9258	1130	36	914	24	610	CW
70M	C.I.	2	24 681	4933	12 380	1410	42	1067	30	762	CW
	F.S.	2	27 042	5421	13 618	1540	42, 48	1067, 1219	30	762	CW
88M	C.I.	2	44 778	9916	22 183	3630	54, 48	1372, 1219	36, 30	914, 762	CW
	F.S.	2	47 766	11 018	23 828	3720	54, 48	1372, 1219	36, 30	914, 762	CW
103M	C.I.	2	39 917	11 794	18 144	5900	66, 60	1676, 1524	42	1067	CCW
	F.S.	2	43 092	12 701	19 958	6260	66, 60	1676, 1524	42	1067	CCW
110M	C.I.	2	52 488	13 550	23 834	6800	72	1829	48	1219	CCW
	F.S.	2	56 412	14 397	25 740	7250	72	1829	48	1219	CCW

Approximate Dimensions (millimetres)

Elliott Compressor Frame	A	B	Overall Length				D	E	EE	Nozzle Distance				G
			C Min. Stages	CC Six Stages	CCC Four Stages	Each Add'l Stage				F Min. Stages	FF Six Stages	FFF Four Stages	Each Add'l Stage	
29M	1550	1470	1320	1880	—	110	690	810	810	610	970	—	110	440
	1550	1470	1320	1880	—	110	690	810	810	610	970	—	110	440
	1550	1470	1320	1880	—	110	690	810	810	610	970	—	110	470
	1550	1470	1320	1880	—	110	690	810	810	610	970	—	110	470
38M	1730	2110	1650	2180	—	180	690	890	890	790	1320	—	180	510
	1730	2110	1650	2180	2210	180	690	890	990	790	1320	1450	180	510
	1730	2110	1650	2180	2210	180	690	890	990	790	1320	1450	180	530
46M	2130	2460	1850	2540	—	230	710	1070	1070	990	1680	—	230	530
	1800	2010	2210	2900	3020	230	560	1120	1320	990	1680	1750	230	580
	1800	2010	2210	2900	3020	230	560	1120	1320	990	1680	1750	230	580
60M	3150	3020	2670	3580	—	300	610	1730	1730	1300	2180	—	300	560
	2340	2620	2570	3580	3760	300	610	1450	1630	1300	2180	2360	300	640
70M	3710	3330	2620	3760	—	380	560	2030	2130	1270	2410	—	380	760
	3050	3250	2620	3760	3990	380	610	1730	1960	1350	2490	2690	380	580
88M	3175	3330	2920	4440	—	510	610	1830	1900	1650	3120	—	510	610
	3610	3330	2920	4340	4090	510	610	2130	2440	1650	3120	3230	510	610
103M	3580	3660	3330	4930	—	530	610	1980	2130	1800	3350	—	530	580
	3960	3760	3380	4930	5030	530	610	2080	2590	1800	3350	3530	530	690
110M	4010	4470	3250	5330	—	610	610	2340	2490	2110	3940	—	610	640
	4500	4470	3300	5330	5640	610	610	2390	2900	2110	3940	4110	610	740

*The normal driving end is the discharge end. For units requiring opposite rotation, the drive end is the suction end.

B.2 QUICK SELECTION METHODS FOR MULTISTAGE COMPRESSORS*

Among the many purely graphical methods of rapidly selecting multistage compressors is one developed around 1965 by Don Hallock of the Elliott Company, Jeannette, Pa. To use these charts, the following quantities must be known:

1. W—weight flow, in lb/min or scfm (standard ft^3/min).
2. P_1—inlet pressure, in psia
3. R_p—pressure ratio (discharge psia/inlet psia)
4. t_1—inlet temp., in °F
5. M—mole weight
6. K—ratio of specific heats

Determine the Inlet cfm, Q1. If W is known, use Fig. B.1, proceeding through P_1, t_1, and M to find Q_1.

If scfm is known, use Fig. B.2, proceeding through P_1, t_1, and "temperature standard" to find Q_1.

Determine the Head H. On Fig. B.3, enter R_p and proceed through K, t_1, and M as shown. If head H exceeds 80,000 to 90,000, more than one compressor body will be required.

Determine the Number of Stages Required. On Fig. B.4, enter head H and proceed through M to read the number of stages required. Round this off to the next-higher even number.

Determine the Speed and Size of the Machine. On Fig. B.5, enter Q_1 and read the maximum width in inches. Proceed to the stepped lines and read the rpm and flange sizes. Proceed through the number of stages and read the length of the machine in inches. In the example shown, the icfm is 45,000 and the gas is between propane and chlorine in mole weight. The speed is shown to be 4000 rpm and the flanges are 36 and 24 in. A slightly higher flow requires 3500 rpm and 42- and 30-in. flanges.

Determine the Horsepower Requirement. On Fig. B.6, enter W, proceed through Q_1 and H, and read HP. If W is not known, work backward from Q_1 on Fig. B.1 to find W before using Fig. B.6.

For uncooled, constant weight flow compression, such as alkylation, wet gas, recycle, or air under 50 psia, the foregoing is sufficient to determine price, size, and driver requirement. For cooled or variable weight flow compression, proceed as follows:

Cooled Compression. Assume one cooler and two compression sections, each section handling a pressure ratio equal to the square root of the overall pressure ratio.

- Determine discharge temperature t_2 from Fig. B.7, proceeding through R_p, Q_1, K, and t_1.
- Assuming that this t_2 is satisfactory, proceed through all the figures for each of the separate sections. Speed and width of the compressor will be dictated by the first sections. The total horsepower is the sum of the sections.

---

* Developed and contributed by Don Hallock, Elliott Company, Jeannette, Pa. Adapted by permission of *HP* and the Elliott Company. Originally published in the October 1965 issue of *Hydrocarbon Processing*.

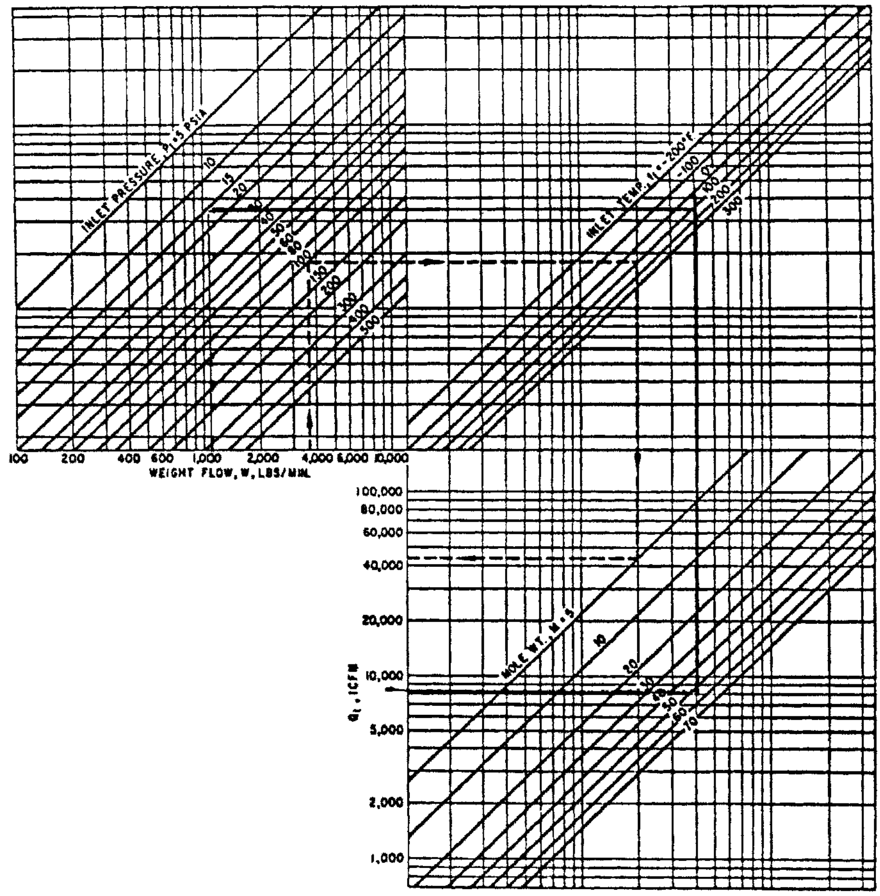

FIGURE B.1 If the weight flow of gas *W* is known, use this chart to find the inlet flow Q_1 (icfm).

- If one cooler does not depress t_2 sufficiently, or if still more horsepower saving is desired, try two coolers or more. R_p per section for a two-cooler three-section arrangement is the cube root of the overall R_p; for a three-cooler four-section arrangement, it is the fourth root. Bear in mind that more than one set of cooler openings is seldom available on a single compressor body. When more than one cooler is chosen, therefore, more than one compressor body is likely to be required.

Considerable judgment is required in choosing the number of coolers to use. Once the temperature limits are satisfied, the use of additional coolers becomes a matter of economics between compressor and cooler cost, and horsepower evaluation.

Variable Weight Flow. For applications having side flows either in or out, it is necessary to consider each constant flow compression section separately. Mixture temperature to the second section after the first "inward" side flow must be calculated by finding the discharge

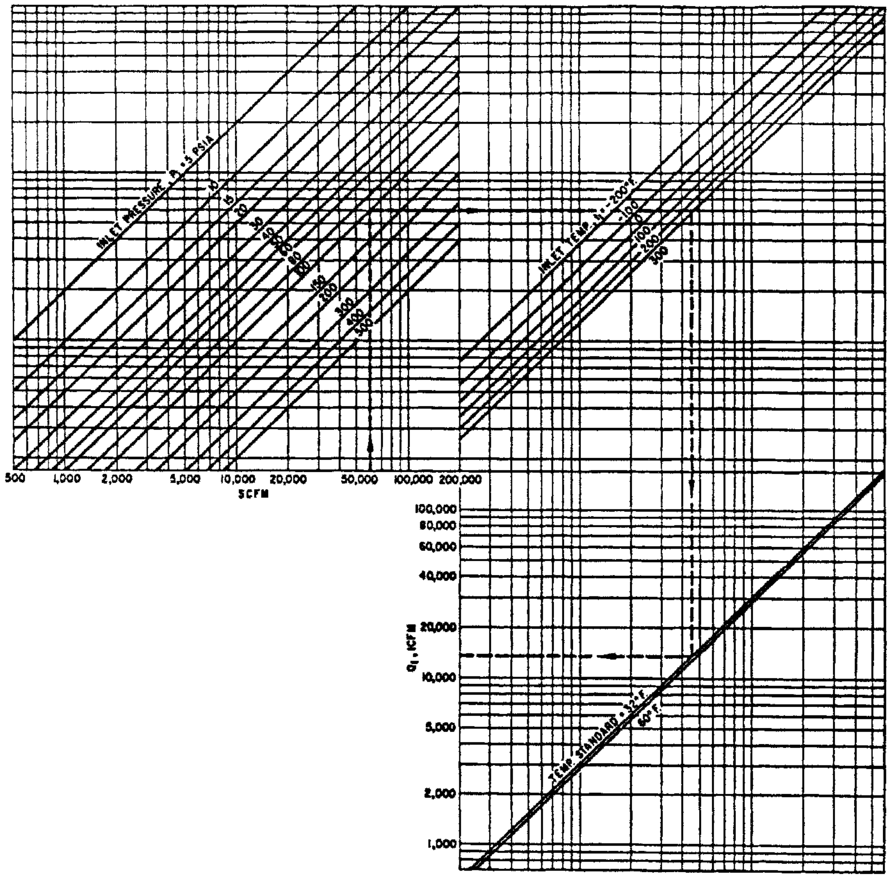

FIGURE B.2 If the scfm value is known, use this chart to find the inlet flow Q_1 (icfm).

temperature of the first section from Fig. B.7, multiplying by the first section weight flow, adding in the product of the sidestream temperature and weight flow, and dividing by the sum of the weight flows. With mixture t_1, P_1, W, M, and K known, the figures can now be used for the second section, and so on through the machine.

M and K of the sidestream will generally be the same or quite close to those of the inlet, so mixture calculations for these quantities will normally be unnecessary. For extraction side flows, the second section inlet conditions are the same as the first section discharge conditions, except for W.

Normally, the first section will "see" the largest Q_1, in which case the first section Q_1 will dictate the size and speed of the machine. An occasional refrigeration process, however, will show the second section Q_1 to be the largest. In this case, *that* Q_1 will dictate machine size and speed.

To determine the number of stages required, add the stages for each compression section and add in a blank stage for each large side load. It is impossible to give criteria for exactly what constitutes a "large" side load, but experience has shown that a typical propylene unit

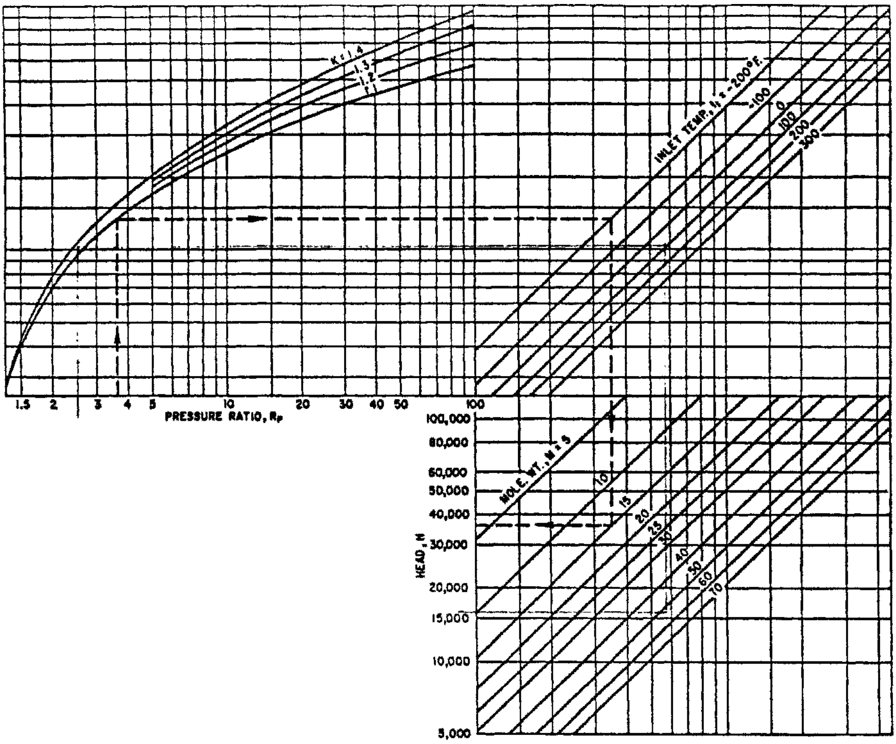

FIGURE B.3 Enter this chart at R_p, the pressure ratio (discharge/inlet, psia), to find the head *H*.

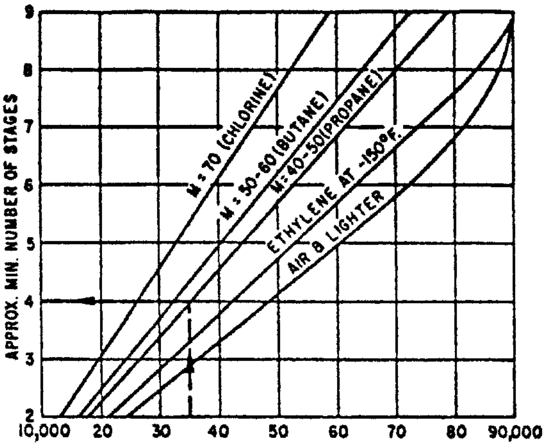

FIGURE B.4 Enter this chart with the *H* value on Fig. B.3 to find the number of stages required.

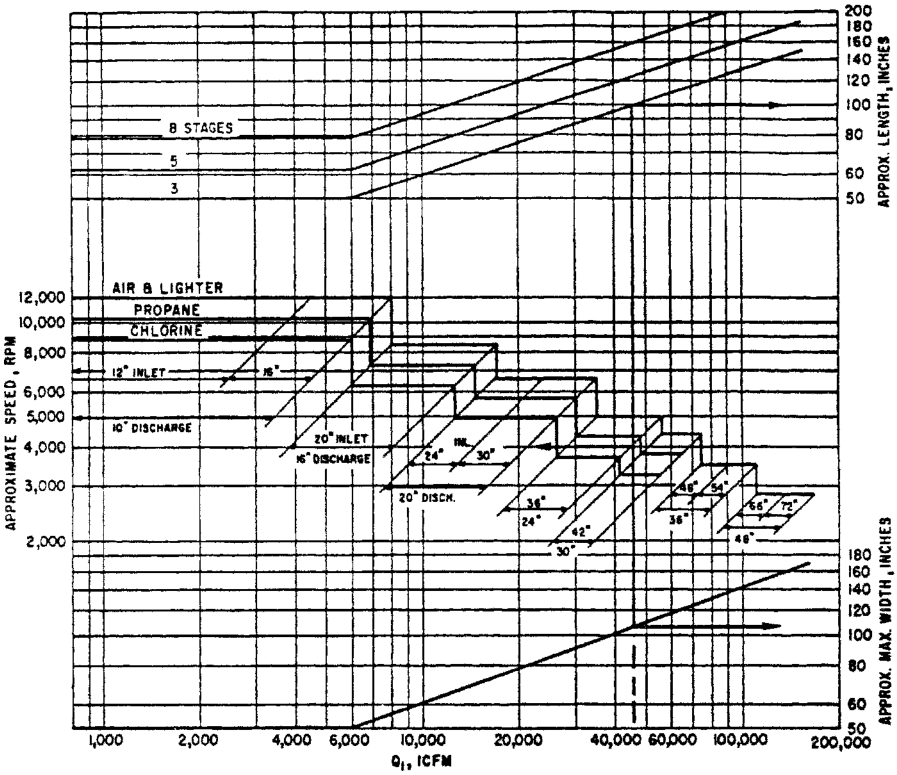

FIGURE B.5 Enter this chart at the Q_1 value from Fig. B.1 or B.2 and find the speed, width, length, and flange sizes.

will require a blank stage for the first sideload only, whereas a typical ethylene machine may require two blank stages. If the total number of stages, including blanks, exceeds nine, a second machine will probably be required.

B.3 DELAVAL ENGINEERING GUIDE TO COMPRESSOR SELECTION*

---

* Reprinted by permission of IMO Industries, Inc., DeLaval Turbine Division, Trenton, N.J.

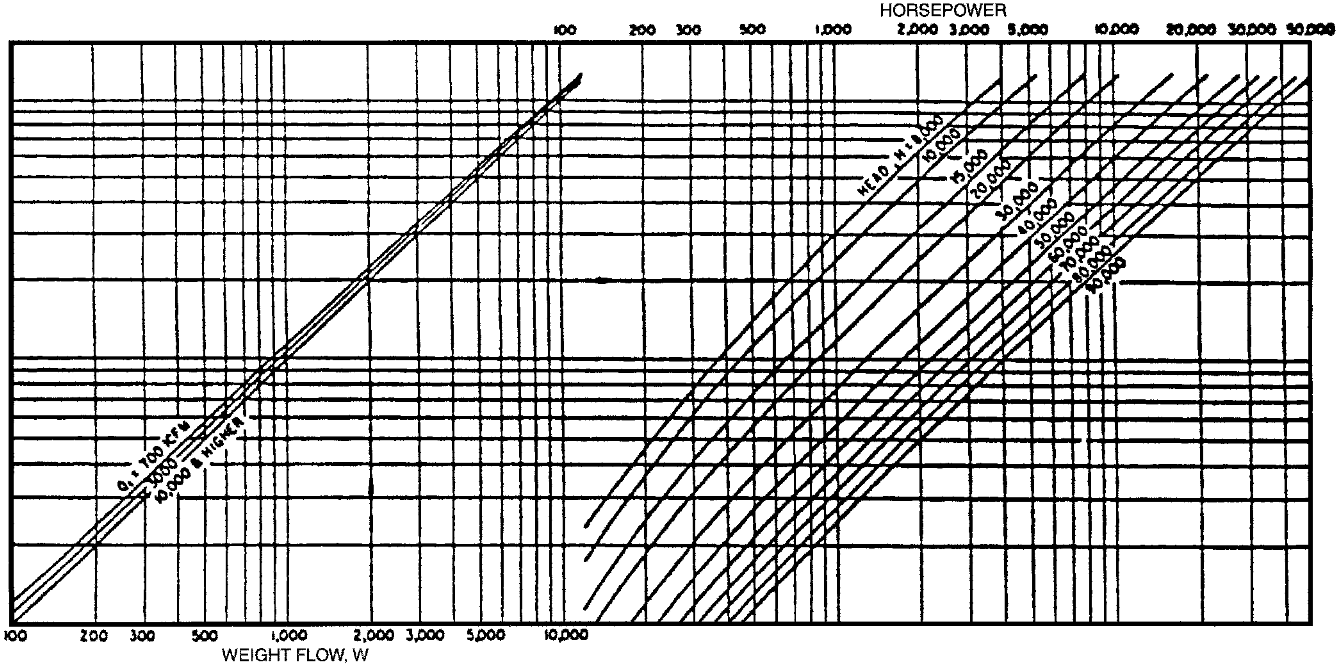

FIGURE B.6 Enter this chart at the weight flow of gas *W* and proceed to find the compressor horsepower required.

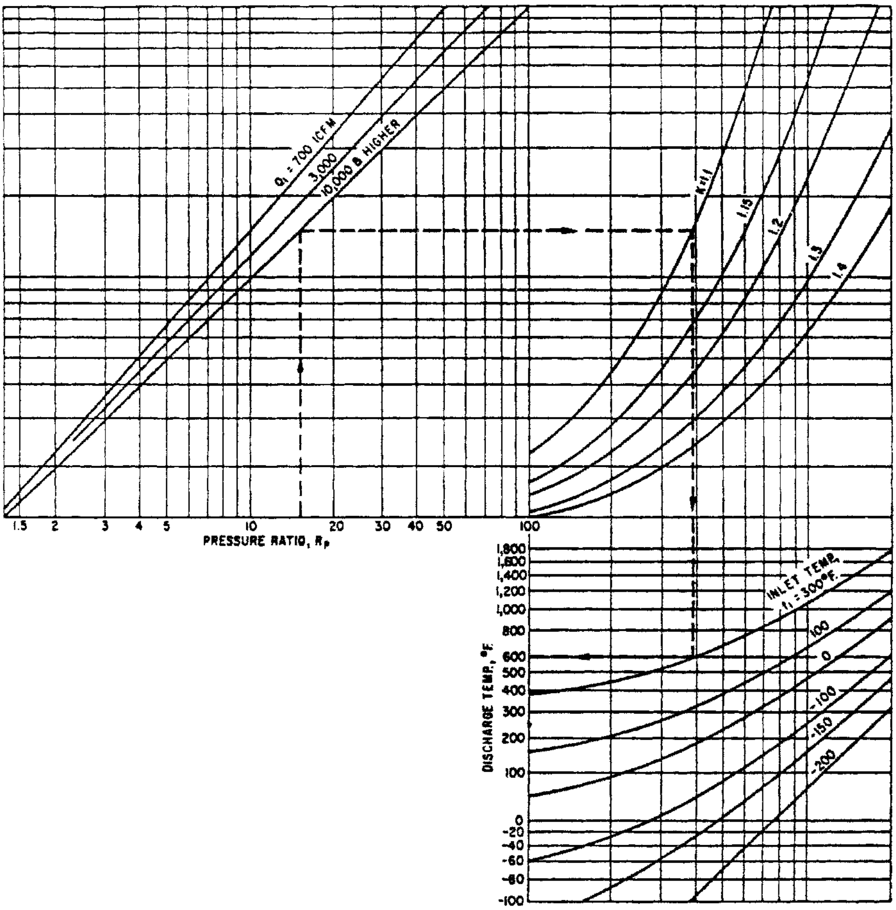

FIGURE B.7 The discharge temperature can be found on this chart.

Delaval Engineering Guide to Compressor Selection

I. Symbols

The following are the symbols (and their definitions) and the units of measurement used throughout this section.

C	Specific heat of mixture
C_p	Specific heat at constant pressure
C_v	Specific heat at constant volume
D	Impeller diameter (inches) (mm)
G	Weight of mixture
g	Gravitational constant (32.2 ft/sec²)
H	Head (ft lbf/lbm) (Nm/kg)
k	Ratio of specific heats (C_p/C_v)
lbf	Pound force
lbm	Pound mass
$\dot{m}$	Mass flow (lbm/min) (kg/sec)
M_{cp}	Molar specific heat at constant pressure
MW	Molecular weight
MWP	Maximum working pressure (psi) (bar)
N	Number of compression stages
n	Polytropic exponent
P_R	Reduced pressure
P	Pressure (psia) (bar)
P_c	Critical pressure (psia) (bar)
P_e	Brakepower (kW)
P_i	Gaspower (kW)
Q	Capacity (cfm) (m³/sec)
R	Gas constant $\left(\frac{1544}{MW}\right)\left(\frac{8314}{MW}\right)$
r	Pressure ratio (P_2/P_1)
T	Absolute temperature (°R = °F + 460) (°K = C + 273)
Tc	Critical temperature (°R) (°K)
T_R	Reduced temperature
ΔT	Change in temperature (°)
U	Tip speed (ft/sec) (m/sec)
V	Total volume (ft³) (m³)
v	Specific volume (ft³/lbm)(m³/kg)
W	Weight of gas (lbm)
Z	Compressibility factor
BHP	Brake horsepower (hp)
GHP	Gas horsepower (hp)
η	Efficiency
Φ	Flow coefficient
Ψ	Head coefficient

Subscripts

ad	Adiabatic process
p	Polytropic process
s	Standard conditions (14.7 psia, 60°F, dry O_2) (1.0135 bar and 0 °C)
1	Inlet to section
2	Discharge from section
x	At a specific point (inlet, discharge, etc.)

II. The Gas Compression Theory

The relationship between the volume, absolute pressure and absolute temperature of a perfect gas, based on Charles' and Boyle's Laws, is: PV = WRT; or, on a mass basis, Pv = RT.

An important characteristic of gases is specific heat.

Specific heat is defined as the amount of heat (BTU) (kJ) required to raise the temperature of one pound (kilogram) of gas one degree Fahrenheit (Kelvin). The amount varies depending on whether the gas volume or pressure is kept constant during the heating process. This is defined by: $R \propto C_p - C_v$. The ratio (k) of specific heat of a gas at constant pressure to that at constant volume (C_p/C_v) is used in gas calculations.

If heat is neither added nor removed from the gas during compression, the process is defined as isentropic or adiabatic. The relationship of pressure and volume for a perfect gas undergoing isentropic compression is defined as PV^k, a constant.

Because many gases do not perfectly obey the theoretical laws, the deviation must be accounted for. The deviation, termed compressibility (Z), is defined as the ratio of actual gas volume at a given temperature and pressure to the volume calculated by the theoretical law (Pv = RT).

The general equation for adiabatic work is:

$$H = ZRT \frac{\left[\left(\frac{P_2}{P_1}\right)^{\frac{k-1}{k}} - 1\right]}{\frac{k-1}{k}} \text{ ft lbf/lbm (Nm/kg)}$$

The actual compression path seldom follows the adiabatic process but is generally in the form PV^n, a constant. This is called a polytropic process and is defined as reversible with heat transfer.

n is the exponent of polytropic compression and is found from:

$$\frac{n-1}{n} = \frac{k-1}{k}\left[\frac{1}{\eta_p}\right]$$

where η_p is the polytropic compression efficiency. Figure 1 shows the relationship between polytropic and adiabatic efficiency.

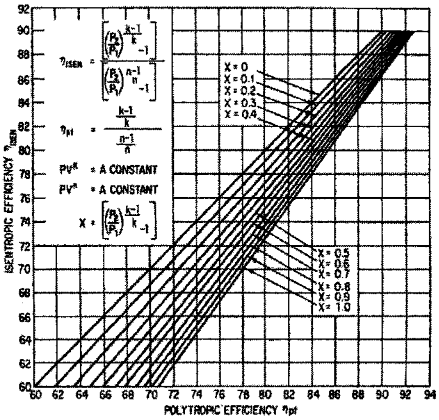

Figure 1

III. Determining Z, k, and MW

Before a compressor cycle can be calculated, it is necessary to know the specific heat ratio, k; molecular weight, MW; and compressibility, Z, of the gas. For pure gases or air, these values can be taken from Figure 2. For a mixture of gases, the values must be calculated. Mixtures are generally specified in volumetric or mole percentages.

The properties of the mixture are determined by the composite properties of the constituent gases.

The values for the compressibility (Z) of gas mixtures can be calculated if the gas analysis is known.

Z can be derived from the rule of corresponding states using reduced temperature and pressure. To calculate reduced temperature (T_R) and reduced pressure (P_R), see the following information. The critical constants T_c and P_c for various gases are given in Table 1.

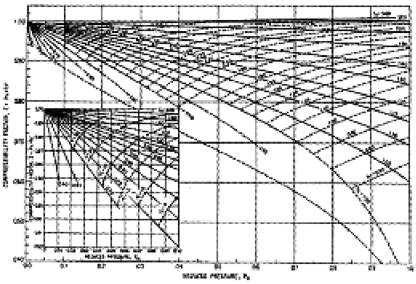

Figure 2

English & Metric

To facilitate the broadest use of the information contained in this brochure, terms have been stated in both English and Metric.

Use of parentheses, blue type or light blue shading over areas of type indicate Metric values.

Physical Constants of Gases

Compound	Formula	Mol. wt. MW	C_p and C_p/C_v at 14.7 psia and 60°F		C_p and k at 1.01325 bar and 0° C		Critical constants		Critical constants		MC_p at 60° F	MC_p at 100° F	MC_p at 200° F	MC_p at 0°C	MC_p at 25°C	MC_p at 100°C
			C_p	C_p/C_v	C_p kJ/(kg.k)	k	psia P_c	°R T_c	bar P_c	K T_c						
Acetylene	C_2H_2	26.036	0.3966	1.238	1.6345	1.243	905.0	557.4	61.4	308.3	10.33	10.69	11.53	42.56	43.72	47.62
Air	$N+O_2$	28.966	0.2470	1.395	1.0046	1.400	547	238.7	37.7	132.4	6.96	6.96	6.99	29.11	29.11	29.11
Ammonia	NH_3	17.032	0.5232	1.310	2.0323	1.317	1,657	731.4	112.8	405.5	8.91	8.57	9.02	34.81	35.08	37.25
Benzene	C_6H_6	78.108	0.2404	1.118	0.9429	1.126	714	1,013.0	49.0	562.2	16.76	20.47	24.46	73.65	82.09	105.05
1,2-Butadiene	C_4H_6	54.088	0.3458	1.12	1.3934	1.124	653	799.0	45.0	443.7	18.70			75.37	80.17	93.71
1,3-Butadiene	C_4H_6	54.088	0.3412	1.12	1.3615	1.128	628	766.0	43.3	425.4	18.45			73.65	79.72	95.75
N-Butane	C_4H_{10}	58.120	0.3970	1.094	1.5625	1.101	550.7	765.6	38.0	425.2	23.07	24.51	26.16	90.84	97.83	117.83
Isobutane	C_4H_{10}	58.120	0.3872	1.097	1.5433	1.102	529.1	734.9	36.5	408.1	22.50	23.96	27.62	89.70	97.10	118.08
N-Butene	C_4H_8	56.104	0.3703	1.105	1.4160	1.117	583	755.6	40.2	419.6	20.77	22.09	25.18	79.45	85.74	103.31
Isobutene	C_4H_8	56.104	0.3701	1.106	1.4872	1.111	579.8	752.5	40.0	417.9	20.76			83.44	89.03	105.66
Butylene	C_4H_8	56.104	0.3703	1.105	1.4687	1.112	583	755.6	41.0	428.6	20.76	21.94	24.86	82.41	87.86	103.88
Carbon dioxide	CO_2	44.010	0.1991	1.300	0.8223	1.299	1,073	548.0	73.8	304.2	8.76	9.00	9.35	36.19	37.04	39.80
Carbon monoxide	CO	28.010	0.2484	1.403	1.0467	1.397	510	242.0	35.0	132.9	6.96	6.96	6.98	29.32	28.97	28.85
Chlorine	Cl_2	70.914	0.1149	1.356	0.4731	1.330	1,120	751	77.2	417.2	8.15			33.55	33.86	35.03
Ethane	C_2H_6	30.068	0.4097	1.193	1.6462	1.202	708.3	550.1	48.8	305.4	12.32	12.96	14.68	49.50	52.88	62.72
Ethyl alcohol	C_2H_5OH	46.069	0.3070	1.130	1.5240	1.135	927.0	929.6	63.8	516.3	14.14			70.21	73.49	84.10
Ethylene	C_2H_4	28.052	0.3622	1.243	1.4562	1.256	742.1	509.8	50.3	282.4	10.16	10.68	12.08	40.85	43.58	51.42
N-Hexane	C_6H_{14}	86.172	0.3984	1.062	1.5416	1.067	439.7	914.5	30.1	507.4	34.33	36.23	41.08	132.85	143.24	172.90
Helium	He	4.003	1.2480	1.6598	5.2000	1.667	480	510	2.3	5.2	5.00			20.82	20.82	20.82
Hydrogen	H_2	2.016	3.408	1.408	14.3649	1.404	188.0	60.2	13.0	33.33	6.87	6.90	6.95	28.96	28.66	28.41
Hydrogen sulfide	H_2S	34.076	0.254	1.323	0.9797	1.333	1,306	672.7	90.1	373.5	8.86	8.18	8.36	33.36	33.53	34.58
Methane	CH_4	16.042	0.5271	1.311	2.1637	1.316	673.1	343.6	46.1	190.6	8.46	8.65	9.30	34.71	35.80	39.82
Methyl alcohol	CH_3OH	32.042	0.2700	1.203	1.3398	1.241	1,157.0	924.0	80.9	512.6	8.55			42.93	45.08	51.11
Nitrogen	N_2	28.016	0.2482	1.402	1.0467	1.397	492.0	227.2	126.2	126.2	6.95	6.96	6.963	29.32	28.97	28.74
N-Octane	C_8H_{18}	114.224	0.3998	1.046	1.5349	1.050	362.1	1,025.2	24.9	568.8	45.67			175.33	189.39	228.04
Oxygen	O_2	32.00	0.2188	1.401	0.9168	1.396	730	278.2	50.8	154.8	7.00	7.03	7.120	29.34	29.21	29.61
N-Pentane	C_5H_{12}	72.146	0.3972	1.074	1.5541	1.080	489.5	845.9	33.7	469.7	28.66	30.30	34.41	112.12	120.83	145.36
Isopentane	C_5H_{12}	72.146	0.3880	1.075	1.5248	1.082	483.0	830.0	33.8	460.4	27.99	29.90	34.44	110.02	119.02	144.76
Propane	C_3H_8	44.094	0.3885	1.136	1.5518	1.139	617.4	666.2	42.5	369.8	17.13	18.21	20.90	68.42	73.85	89.58
Propylene	C_3H_6	42.078	0.3541	1.154	1.4202	1.162	667	657.4	46.1	364.8	14.90	15.77	17.88	58.76	63.96	76.15
Sulfur dioxide	SO_2	64.060	0.1470	1.246	0.6029	1.275	1,142	775.0	78.9	430.7	9.42			38.62	39.43	42.11
Toluene	C_7H_8	92.134	0.2599	1.091	1.0224	1.097	611	1,069.5	41.1	591.8	23.95			94.21	104.16	131.24
Water	H_2O	18.016	0.4446	1.335	1.8715	1.328	3,206	1,165.4	221.2	647.4	8.01	8.03	8.12	33.72	33.42	33.49
Natural gas		19.27	0.488	1.269	1.799	1.316	670	380	46.2	211.1	8.47	8.72	9.37	34.66	35.90	37.60

Table 1

For example, for a gas mixture with a composition (by volume) of 14% ethane, 85% methane and 1% nitrogen, T_C and P_C would be calculated as follows:

Gases	V (%/100)	T_C	T_C	VT_C	VT_C	P_C	P_C	VP_C	VP_C
C_2H_6	0.14	550.1	305.4	77.01	42.76	708.3	48.8	99.16	6.83
CH_4	0.85	343.5	190.6	292.00	162.01	673.1	46.1	572.19	39.14
N_2	0.01	227.2	126.2	2.27	1.26	492.0	33.9	4.92	0.34

For mixture T_C= 371.26°R (206.03°C) P_C=676.27psia (46.31 bar)

Using the above values, and assuming gas conditions of 90°F (30°C) and 124.5 psia (8.5 bar):

$$T_R = \frac{T}{T_C} = \frac{90 + 460}{371.3} \quad \frac{30 + 273.15}{206.03} = 1.48$$

$$P_R = \frac{P}{P_C} = \frac{124.5}{676.3} \quad \frac{8.5}{46.31} = 0.18$$

Using the calculated values of reduced temperature and pressure, the value of Z (.98) can be read from Figure 2, a generalized curve that can be used for any gas mixture. Figure 3 is a curve directly showing compressibility factors of natural gas at various pressures and temperatures.

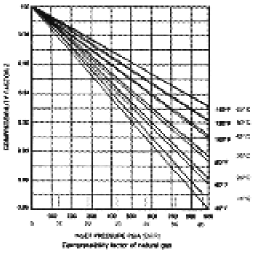

Figure 3

The molecular weight of a gas mixture is equal to the sum of the products of the proportional volume of each constituent and its molecular weight.

$$MW = m_1v_1 + m_2v_2 \ldots\ldots + m_nv_n$$

A simplified method for finding the ratio of specific heats (k) makes use of the molal specific heat M_{cp} expressed as

$$k = \frac{M_{cp}}{M_{cp} - 1.99} \qquad k = \frac{M_{cp}}{M_{cp} - 8.33}$$

Calculation of the properties of a gas mixture can best be done in tabular form. The following example determines the properties of a typical natural gas.

Gas	V (%/100)	MW	V(MW)	M_{cp} at 100°F	VM_{cp}	M_{cp} 41.26°C	VM_{cp}
C_2H_6	0.14	30.07	4.21	12.96	1.814	52.88	7.40
CH_4	0.85	16.04	13.63	8.65	7.353	35.80	30.43
N_2	0.01	28.02	0.28	6.98	0.069	28.97	0.29
Total	1.00	MW = 18.12		M_{cp} = 9.237		M_{cp} = 38.12	

$$k = \frac{9.237}{9.237 - 1.99} = 1.275$$

$$k = \frac{38.12}{38.12 - 8.33} = 1.280$$

IV. Selection Procedure

A. QUALIFYING THE SELECTION PROCEDURE

This procedure is intended to aid the user in making rapid preliminary compressor selections and estimating compressor performance. Only Delaval engineering will issue formal selections.

The method is to be used on a sectional basis. It examines a gas before it enters and after it leaves the compressor or compressor section (Figure 4). In the case of intercooled or side loaded compressors, the sections must be dealt with separately; the section with the largest inlet flow (Q) governs the frame size.

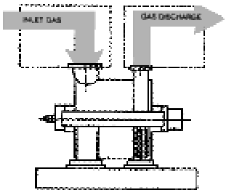

Figure 4

B. INPUT DATA REQUIRED

Selection of a compressor frame size and calculation of performance requires the following data: k, Z, MW, P_1, P_2, T_1, Q_1, (or $\dot{m}$). If the gas analysis is provided, values for k, Z, and MW can be calculated.

C. METHOD OF CALCULATION

The Delaval process compressor line was designed around the concept of component and performance similarity throughout the various frame sizes. Using the non-dimensional impeller flow coefficient (Φ) as a basis for determining aerodynamic performance of an impeller of any size, a common link between frame sizes results. In this way, theoretical and test data have been combined to define compressor characteristics for any size unit. The following procedure utilizes this approach for compressor selection.

D. FABRICATED MULTI-STAGE SELECTION PROCEDURE

Steps:

1. Calculate volmetric inlet flow (ACFM) from either of the following methods:

   a. From mass flow rate ($\dot{m}$),

   $$ACFM_X = v_X (\dot{m}) \text{ where } v_X = \frac{Z_X RT_X}{144 P_X}$$

   b. From moles/hour,

   $$ACFM_X = \frac{(\text{Moles/hour}) (MW) (v_X)}{60}$$

   c. From SCFM,

   $$ACFM_X = SCFM \; \frac{(P_S) \; (T_X) \; (Z_X)}{(P_X) \; (T_S) \; (Z_S)}$$

1. Calculate volumetric inlet capacity from either of the following methods:

   a. From mass flow rate

   $$Q_X = \dot{m} (v_X) \text{ where } v_X = \frac{Z_X (R) T_X}{P_X}$$

   b. From moles/hour

   $$Q_X = \frac{(\text{Moles/hour}) (MW) \; v_X}{3600}$$

   c. From standard volumetric inlet flow,

   $$Q_X = \frac{Q_S (R_S) (T_X) (Z_X)}{(P_X) (T_S) (Z_S)}$$

2. Calculate adiabatic head based on inlet conditions to section,

$$H_{ad} = Z_1 RT_1 \frac{\left[r^{\frac{k-1}{k}} - 1 \right]}{\frac{k-1}{k}}$$

3. Estimate discharge temperature (T_2) due to compression cycle[1]

$$\Delta T = T_1 \frac{\left[r^{\frac{k-1}{k}} - 1 \right]}{\eta_{ad}} \quad (\text{assume } \eta_{ad} = .75)$$

$$T_2 = T_1 + \Delta T$$

4. Determine minimum frame size from Figure 5.

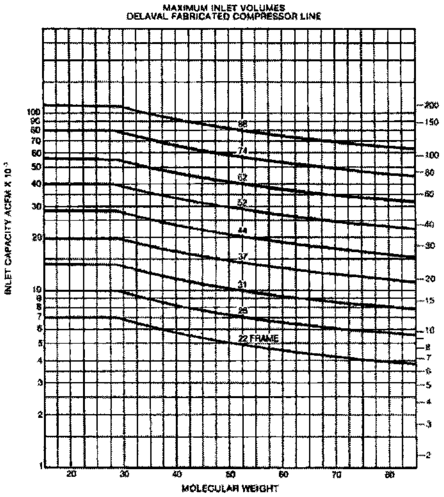

Figure 5

Footnote:
[1] Nominal temperature limitations are 450°F (250°C) for labyrith seals and 375°F (190°C) for oil face or bushing seals.

5. Find impeller wheel diameters from following table

Frame	D	Frame	D (mm)
22	13.65"	22	347
26	16.25"	26	413
31	19.25"	31	489
37	22.875"	37	581
44	27.25"	44	692
52	32.5"	52	826
62	38.5"	62	978
74	45.6"	74	1158
88	54.25"	88	1378

6. Determine maximum impeller head per stage from Figure 6. Minimum number of compression stages required from:

$$\text{No. of stages} = \frac{H_{ad}}{\text{Head per stage}}$$

Round off quantity to the next higher integer.

7. Calculate tip speed[1]

$$U = \sqrt{\frac{H_{ad}(g)}{N\Psi}} \qquad U = \sqrt{\frac{H_{ad}}{N\Psi}}$$

Select nominal Ψ

MW	Ψ
6	.45
18	.46
29	.48
44	.50
71	.51

8. Calculate inlet and discharge flow coefficients[2]

$$\Phi_x = \frac{3.056\, Q_x}{UD^2} \qquad \Phi_x = \frac{4Q_x}{\pi U D^2}$$

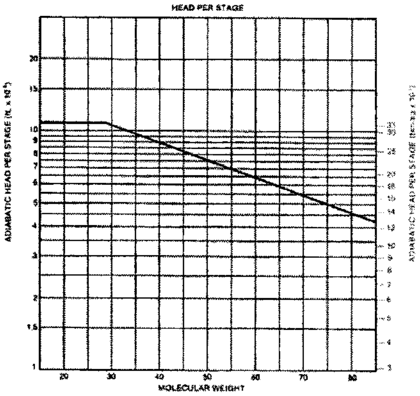

Figure 6

9. Use Figure 7 to determine first and last stage efficiency and average to get overall efficiency., If Φ falls to the right of the efficiency curve, select a larger frame size. If Φ falls to the far left, select a smaller frame size.

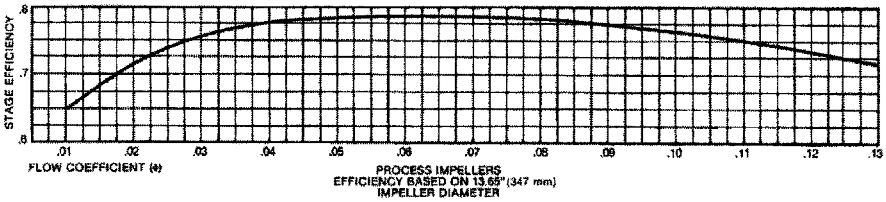

Figure 7

Footnotes:

[1] For initial sizing, limit tip speed to 900 ft/sec (275 m/sec); or 800 ft/sec (245 m/sec) if low-yield material is required.

[2] Discharge flow coefficient is calculated from discharge conditions in this procedure. It is normally determined from conditions prior to the last stage of compression.

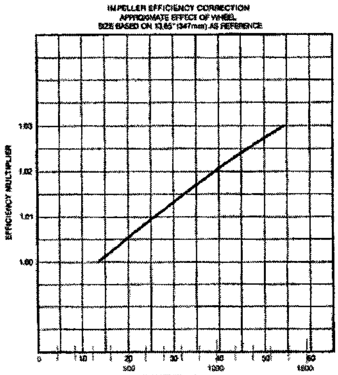

Figure 8

10. Correct efficiency for wheel size using Figure 8.

11. Calculate compressor running speed

$$RPM = \frac{229U}{D} \qquad RPM = \frac{60U}{D}$$

12. Calculate horsepower

a. $GHP = \frac{H_{ad}\,[\dot{m}]}{33{,}000[\eta_{ad}]} \qquad P_i = \frac{H_{ad}\,[\dot{m}]}{1000\,[\eta_{ad}]}$

b. Determine mechanical losses from Figure 9. (Divide total by 2 if labyrinth end seals are used.)

c. Calculate balance drum leakage (2% of GHP or P_i)'

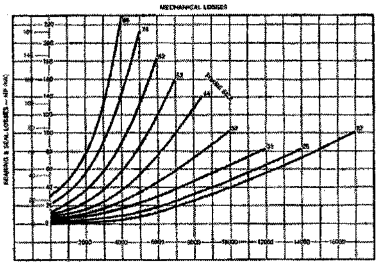

Figure 9

d. BHP = GHP + Mech. losses + balance drum leakage

$P_e = P_i$ + Mech. losses + balance drum leakage

13. Determine casing split

The density of the gas and the maximum working pressure of the compressor will determine the casing split. The following chart is provided as a general guide:

Frame Size	22	26	31	37	44	52	62	74	86
MWP for horizontally split casing (psi)	800	600	600	600	450	300	300	300	300
(bar)	56	42	42	42	32	22	22	22	22

MWP × 1.10 (max. discharge pressure)

If the gas contains over 70% hydrogen, the casing will be vertically split between 200 to 285 psi (14 to 20 bar) MWP and above.

E. CAST CASING COMPRESSOR SELECTION

Although the calculation method presented in this section is based on the Delaval fabricated line, some performance data for cast case units can be calculated from the previous procedure. Once head and inlet flow are determined, the figures presented on pages 11 and 13 should be used to select the proper frame size and number of stages. Impeller diameter and efficiency corresponding to case size is presented below.

MULTISTAGE:

Case	12/12	16/16	18/18	20/20	24/24	30/30	36/36
Nominal Impeller Dia. (Inches)	14	14	23	23	30	38	45
(mm	355	355	584	584	762	965	1143
Avg. Adiabatic Efficiency	.78	.78	.80	.80	.81	.82	.82

SINGLESTAGE (opposed nozzles):

Case	20/20	24/24	30/30	36/36
Nominal Impeller Dia.				
(inches)	18	32	32	38
(mm)	457	813	813	965
Avg. Adiabatic Efficiency	.80	.81	.82	.84

Note: All single-stage units are available in either axial inlet or opposed nozzle configurations. Refer to factory for axial inlet efficiencies.

Substituting this information for steps 8 through 10 allows a quick estimation of pipeline compressor performance.

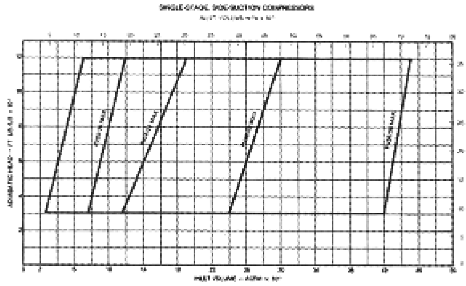

FRAME SIZE SELECTION FOR SINGLE-STAGE, OVERHUNG COMPRESSORS

Determine actual inlet flow into the compressor as well as the total head requirement to find frame size

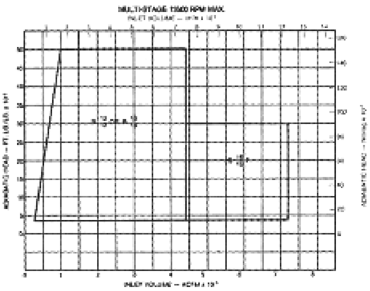

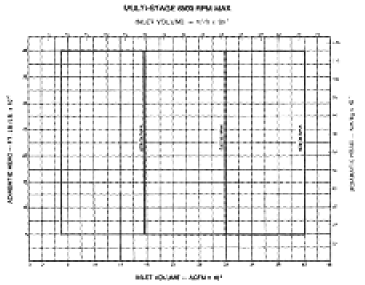

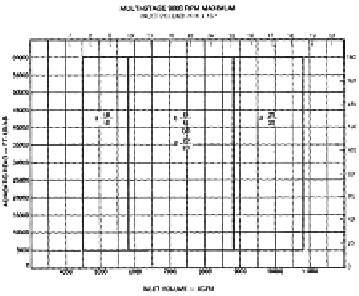

FRAME SIZE SELECTION FOR MULTI-STAGE CAST CASING COMPRESSORS

Calculate the actual inlet flow into the compressor as well as the total head requirements using the driver speed to determine the correct sizing graph. Assume a maximum of 10,000-11,000 ft. (30,000-33,000 Nm/kg) of head per stage to pinpoint the number of compression stages required.

F. DESIGN CONSIDERATIONS

In many cases, a centrifugal compressor must be designed to match special process or driver requirements. By physical arrangement of inner components or the casing structure, specific requirements can be met while still delivering maximum performance. Variations include:

Double-flow arrangement which permits the unit to be smaller in frame size and higher in rotational speed. The inlet flow is split in half and undergoes parallel compression (see Figure 10).

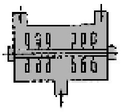
Figure 10

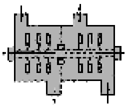
Figure 11

Back-to-back arrangement of two sections in an intercooled machine, which keeps hot discharge temperatures away from end seals and reduces or eliminates aerodynamic thrust forces (see Figure 11).

Overframing the casing and diaphragms, which is sometimes used to increase compressor efficiency. The diffuser plate diameter is increased while impeller diameter is held constant.

Uprating flow capacity of the compressor, which may only require an increase in speed for small changes in flow or an inner bundle change-out for large variations. Nozzle sizes and internal dimensions of the casing will determine the maximum flow capability of the compressor. Consult factory for specific information.

Rotational speed, which can be varied by two methods while the section still produces constant head.

(a) Addition of one impeller permits speed reduction as shown in the equation

$$\text{Revised RPM} = \sqrt{\frac{N}{N+1}}\left[\text{RPM}\right]$$

(b) Wheel triming by reducing the outside diameter of the impeller can allow for up to a 10% increase in rotational speed.

G. COMPRESSOR MODEL NUMBERS

Every Delaval centrifugal compressor is designated by a model number that describes that particular unit. Typical model numbers (and their meanings) for process and pipeline units are shown below.

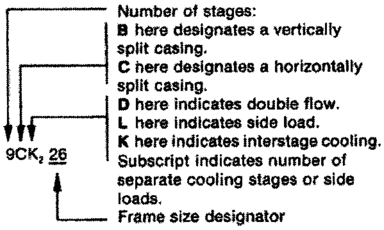

Number of stages:
B here designates a vertically split casing.
C here designates a horizontally split casing.
D here indicates double flow.
L here indicates side load.
K here indicates interstage cooling.
Subscript indicates number of separate cooling stages or side loads.
Frame size designator

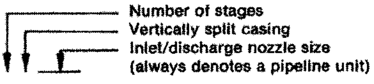

Number of stages
Vertically split casing
Inlet/discharge nozzle size (always denotes a pipeline unit)

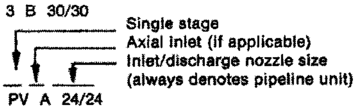

Single stage
Axial inlet (if applicable)
Inlet/discharge nozzle size (always denotes pipeline unit)

V. Sample Calculations (English)

Given: $k = 1.275$, $MW = 18.12$, $Z = .98$
$P_1 = 124.5$ psia, $P_2 = 500$ psia,
$\dot{m} = 5470$ lbm/min
$T_1 = 90°F = 550°R$

Steps:

1. $ACFM_1 = \dot{m}\,v_1;\ v_1 = \dfrac{.98\left[\dfrac{1544}{18.12}\right]550}{124.5\ (144)} = 2.56\,\dfrac{ft^3}{lbm}$

   $ACFM_1 = 5470\ (2.56) = 14000\ ft^3/min$

2. $H_{ad} = .98\left[\dfrac{1544}{18.12}\right](550)\dfrac{\left[\dfrac{500}{124.5}^{\frac{1275-1}{1275}} - 1\right]}{\dfrac{1.275-1}{1.275}} = 74{,}460\ ft.$

3. $\Delta T = 550\ \dfrac{\left[\dfrac{500}{124.5}^{\frac{1.275-1}{1.275}} - 1\right]}{.75} = \begin{array}{r} 256° \\ +90° \\ \hline 346° \end{array}$

   $T_2 = 346°F$ (no intercooling required)

4. From Figure 5, inlet flow is close to maximum of 31 frame and well within the range of 37 frame.

5. Wheel diameters $31 \longrightarrow 19.25''$
   $37 \longrightarrow 22.875''$

6. From Figure 6, maximum head per stage = 11,000 ft.

   Minimum number of stages = 74,460/11,000 = 6.77 or 7 stages.

7. $U = \sqrt{\dfrac{74{,}450\ (32.2)}{(7)\ (.46)}} = 863\ ft/sec$

8. Φ_1 for 31 frame $= \dfrac{3.056\ (14000)}{863\ (19.25)^2} = .134$

   According to Figure 7, a 31 frame is marginal.

   Φ_1 for 37 frame $= \dfrac{3.056\ (14000)}{863\ (22.875)^2} = .095$

   Φ_2 is calculated from Q_2

   $Q_2 = \dot{m}\,v_2$

   $v_2 = \dfrac{Z_2RT_2}{144\ P_2};\ Z_2 = .99$ (from example on page 27, Z_2 is found on Figure 2 from T_R and P_R)

   $v_2 = \dfrac{.99\left[\dfrac{1544}{18.12}\right](806)}{144\ (500)} = .944\,\dfrac{ft^3}{lbm}$

   $Q_2 = 5470\ (.944) = 5166\ ft^3/min$

   $\Phi_2 = .035$

9. From Figure 7:

   $^{\eta}\Phi_1 = .775;\ ^{\eta}\Phi_2 = .775;\ ^{\eta}$ avg. $= .775$

10. Determine impeller efficiency correction from Figure 8:

    1.0075 (.775) = .781

11. $RPM = \dfrac{229\ (863)}{22.875} = 8640\ RPM$

12. $GHP = \dfrac{74460\ (5470.)}{33{,}000\ (.781)} = 15{,}803\ hp$

    Mechanical losses = 81 hp.

    BHP = 1.02 (15,803) + 81 = 16,200 hp

13. A discharge pressure of 500 psia corresponds to a 550 psi MWP casing. Therefore, casing is horizontally split. Model selected is a seven-stage, 37-frame horizontally split: 7C37.

Conversion Table

TO OBTAIN	MULTIPLY	BY
Inches	mm	0.0394
ft³	m³	35.31
ft/sec	m/sec	3.281
cfm	m³/h	0.5883
head (ft)	Nm/kg	0.335
lbm/min	kg/sec	132
psi	bar	14.22
hp	kW	1.341

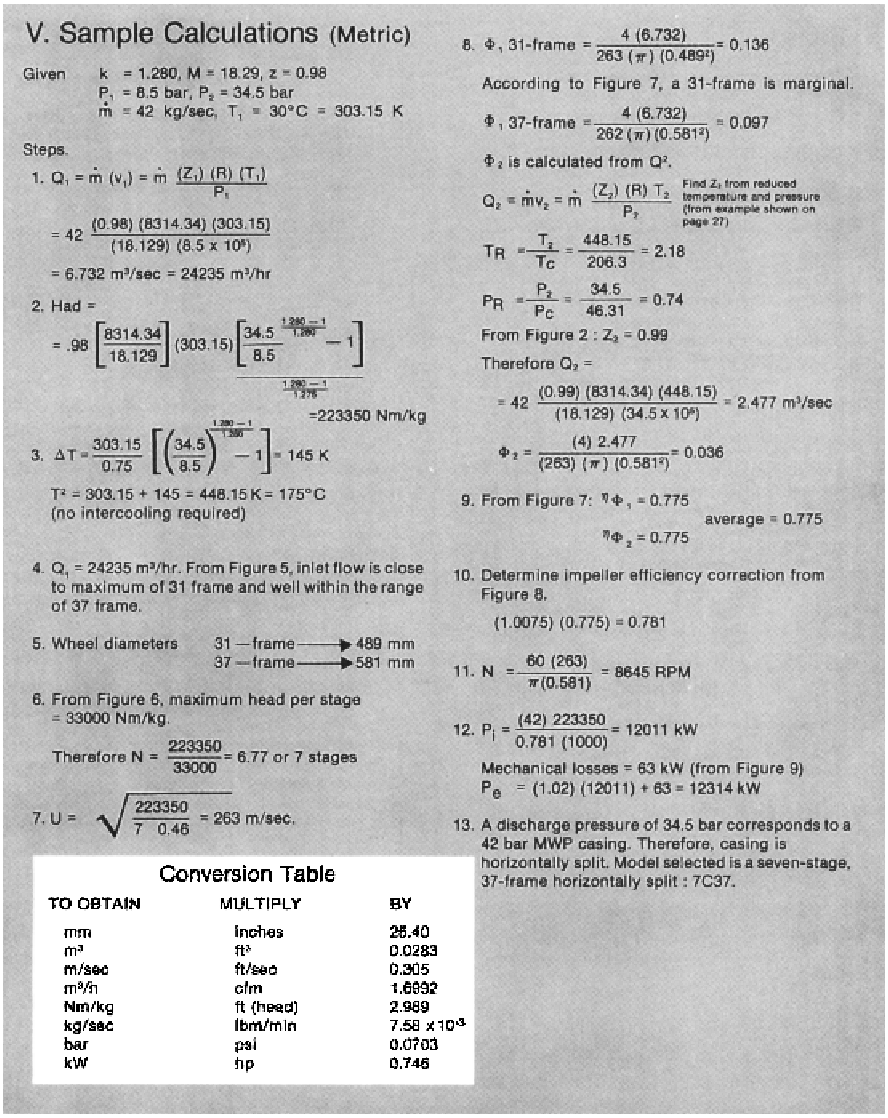

V. Sample Calculations (Metric)

Given $k = 1.280$, $M = 18.29$, $z = 0.98$
$P_1 = 8.5$ bar, $P_2 = 34.5$ bar
$\dot{m} = 42$ kg/sec, $T_1 = 30°C = 303.15$ K

Steps.

1. $Q_1 = \dot{m}\,(v_1) = \dot{m}\,\frac{(Z_1)\,(R)\,(T_1)}{P_1}$

$$= 42\,\frac{(0.98)\,(8314.34)\,(303.15)}{(18.129)\,(8.5 \times 10^5)}$$

$= 6.732$ m³/sec $= 24235$ m³/hr

2. Had =

$$= .98\left[\frac{8314.34}{18.129}\right](303.15)\frac{\left[\frac{34.5}{8.5}^{\frac{1.280-1}{1.280}} - 1\right]}{\frac{1.280-1}{1.276}}$$

$= 223350$ Nm/kg

3. $$\Delta T = \frac{303.15}{0.75}\left[\left(\frac{34.5}{8.5}\right)^{\frac{1.280-1}{1.280}} - 1\right] = 145\ \text{K}$$

$T^2 = 303.15 + 145 = 448.15\,\text{K} = 175°\text{C}$
(no intercooling required)

4. $Q_1 = 24235$ m³/hr. From Figure 5, inlet flow is close to maximum of 31 frame and well within the range of 37 frame.

5. Wheel diameters 31 — frame → 489 mm
37 — frame → 581 mm

6. From Figure 6, maximum head per stage = 33000 Nm/kg.

Therefore $N = \frac{223350}{33000} = 6.77$ or 7 stages

7. $$U = \sqrt{\frac{223350}{7\ \ 0.46}} = 263\ \text{m/sec.}$$

8. $$\Phi_1\text{, 31-frame} = \frac{4\,(6.732)}{263\,(\pi)\,(0.489^2)} = 0.136$$

According to Figure 7, a 31-frame is marginal.

$$\Phi_1\text{, 37-frame} = \frac{4\,(6.732)}{262\,(\pi)\,(0.581^2)} = 0.097$$

Φ_2 is calculated from Q^2.

$$Q_2 = \dot{m}v_2 = \dot{m}\,\frac{(Z_2)\,(R)\,T_2}{P_2}$$

Find Z_2 from reduced temperature and pressure (from example shown on page 27)

$$T_R = \frac{T_2}{T_C} = \frac{448.15}{206.3} = 2.18$$

$$P_R = \frac{P_2}{P_C} = \frac{34.5}{46.31} = 0.74$$

From Figure 2 : $Z_2 = 0.99$

Therefore Q_2 =

$$= 42\,\frac{(0.99)\,(8314.34)\,(448.15)}{(18.129)\,(34.5 \times 10^5)} = 2.477\ \text{m}^3\text{/sec}$$

$$\Phi_2 = \frac{(4)\ 2.477}{(263)\,(\pi)\,(0.581^2)} = 0.036$$

9. From Figure 7: $^{\eta}\Phi_1 = 0.775$
average = 0.775
$^{\eta}\Phi_2 = 0.775$

10. Determine impeller efficiency correction from Figure 8.

$(1.0075)\,(0.775) = 0.781$

11. $$N = \frac{60\,(263)}{\pi(0.581)} = 8645\ \text{RPM}$$

12. $$P_i = \frac{(42)\ 223350}{0.781\,(1000)} = 12011\ \text{kW}$$

Mechanical losses = 63 kW (from Figure 9)
$P_e = (1.02)\,(12011) + 63 = 12314$ kW

13. A discharge pressure of 34.5 bar corresponds to a 42 bar MWP casing. Therefore, casing is horizontally split. Model selected is a seven-stage, 37-frame horizontally split : 7C37.

Conversion Table

TO OBTAIN	MULTIPLY	BY
mm	inches	25.40
m³	ft³	0.0283
m/sec	ft/sec	0.305
m³/h	cfm	1.6992
Nm/kg	ft (head)	2.989
kg/sec	lbm/min	7.56 x 10⁻³
bar	psi	0.0703
kW	hp	0.746

Model B 12/12
Model B 16/16

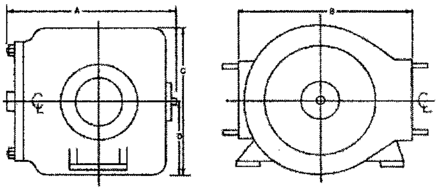

Weights and dimensions

Cast Casing Compressors

FRAME SIZE	MAX. NO. STAGES	A in.	A mm	B in.	B mm	C in.	C mm	D in.	D mm	NOZZLE SIZE SUCTION in.	NOZZLE SIZE SUCTION mm	NOZZLE SIZE DISCHARGE in.	NOZZLE SIZE DISCHARGE mm	TOTAL WEIGHT lb.	TOTAL WEIGHT kg	MAX. MAINT. WT. lb.	MAX. MAINT. WT. kg
B 12/12	5	53	1346	48	1219	38	965	27	686	12	305	12	305	13,000	5900	3,050	950
B 16/16	5	57	1448	48	1209	49	1295	29	737	16	406	16	406	16,200	7300	3,100	1400
B 18/18	5	103	2616	96	2348	69	1753	36	915	18	457	18	457	34,900	19600	10,300	5200
B 20/20	5	105	2667	96	2438	72	1829	30	760	20	508	20	508	45,000	20900	11,500	5300
B 24/24	3	103	2616	102	2591	84	2134	45	1143	24	610	24	610	48,000	21800	12,900	5900
B 30/30	3	125	3175	144	3658	90	2286	54	1372	30	762	30	762	85,000	38500	15,500	7000
B 36/36	3	126	3200	160	4064	117	2972	67	1702	36	914	36	914	120,000	54500	18,600	8500
PV 20/20	1	87	2210	81	2057	64	1626	33	838	20	508	20	508	30,000	13600	3,400	1550
PV 24/24	1	96	2438	120	3048	77	1956	43	1092	24	610	24	610	40,500	18300	4,980	2300
PV 30/30	1	102	2591	134	3404	81	2057	45	1143	30	762	30	762	51,000	23100	6,250	2850
PV 36/36	1	104	2642	144	3658	104	2642	53	1346	36	914	36	914	66,000	29000	8,300	3800

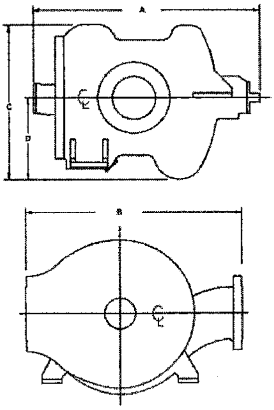

Model B 18/18
Model B 20/20

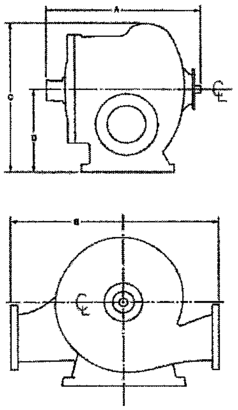

Model B 24/24
Model B 30/30
Model B 36/36

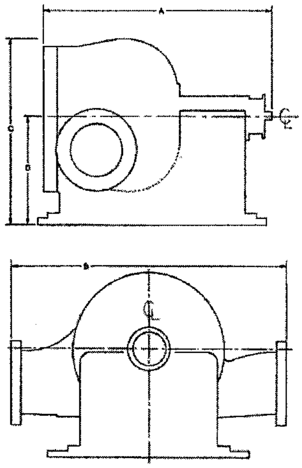

Model "PV" Series

Note: Axial inlet (PVA type compressor) is located in end cover at ℄ of shaft.

Weights and dimensions

Fabricated Centrifugal Compressors

Summary of Specifications

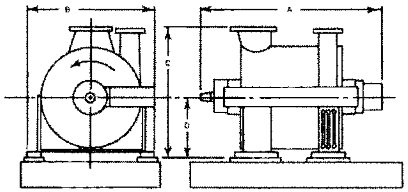

NOTES:

1. Speed and flow ratings are based on 275m/sec (900ft/sec) tip speed and largest standard impeller using standard materials. These ratings may be affected by gas and process conditions or special material requirements.
2. Weights given apply for listed pressure rating and nozzle sizes only.
3. Max. maint. weight is the greatest weight necessary to handle in normal maintenance.
4. All dimensions are approximate.

FRAME SIZE	RATED SPEED	RATED INLET FLOW (1)		MAX. INLET NOZZLE DIA.		MAX. DISCH. NOZZLE DIA.		NO. OF STAGES	A		B		C		D		C-LINE TOTAL WEIGHT		C-LINE MAX. MAINT. WEIGHT		B-LINE TOTAL WEIGHT		B-LINE MAX. MAINT WEIGHT		ROTOR WEIGHT	
	rpm	cfm	m³/hr	in.	mm	in.	mm		in.	mm	in.	mm	in.	mm	in.	mm	lb.	kg	lb.	kg	lb.	kg	lb.	kg	lb.	kg
22	15,100	7,000	12,000	18	406	12	305	5	64	1625	56	1420	55	1400	25	635	13000	5900	5000	2300	15500	7100	3500	1600	425	200
								6	69	1750	56	1420	55	1400	25	635	14000	6400	5500	2700	16500	7500	4000	1800	475	215
								7	73	1850	56	1420	55	1400	25	635	15000	6800	6000	2700	17500	8000	4500	2000	525	240
								8	78	1980	56	1420	55	1400	25	635	16000	7250	6500	3000	18500	8400	5000	2300	600	275
26	12,700	10,000	17,000	18	457	14	356	5	68	1725	64	1625	62	1580	28	715	18000	8200	6500	3000	22500	10200	5000	2300	675	300
								6	73	1850	84	1625	62	1580	28	715	19500	8900	7000	3200	24500	11100	6000	2700	775	350
								7	78	1980	64	1625	62	1580	28	715	21300	9700	7500	3400	26500	12000	7000	3200	875	400
								8	84	2130	64	1625	62	1580	28	715	23000	10500	8000	3700	28500	13000	8000	3700	975	450
31	10,700	14,000	24,000	20	508	16	406	5	75	1905	69	1750	69	1750	31	790	26000	11800	8500	3900	27000	12300	8000	3700	1100	500
								6	81	2060	69	1750	69	1750	31	790	28500	12900	9100	4100	29500	13400	9500	4300	1250	550
								7	88	2235	69	1750	69	1750	31	790	31000	12900	9200	4200	32000	14500	11000	5000	1400	650
								8	94	2390	69	1750	69	1750	31	790	33500	15200	10000	4600	34500	15700	12500	5700	1550	700
37	9,000	20,000	34,000	24	610	20	508	5	82	2080	77	1955	77	1960	35	890	37000	16800	13000	5900	36000	16400	13000	5900	1700	800
								6	89	2260	77	1955	77	1960	35	890	41000	18600	14000	6400	39500	18000	15250	6900	1850	900
								7	96	2440	77	1955	77	1960	35	890	45000	20400	15000	6800	43000	19500	17500	8000	2200	1000
								8	105	2670	77	1955	77	1960	35	890	49000	22250	16000	7300	48500	21000	19000	8600	2450	1100
44	7,550	28,000	48,000	30	762	24	610	5	92	2340	84	2130	84	2130	38	970	50000	22700	16000	7300	45000	20400	20000	9100	2850	1300
								6	104	2640	84	2130	84	2130	38	970	56000	25400	17000	7700	50000	22700	24000	11000	3300	1500
								7	112	2845	84	2130	84	2130	38	970	62000	28100	18000	8200	55000	25000	28000	12700	3750	1700
								8	124	3150	84	2130	84	2130	38	970	68000	30850	19000	8600	60000	27200	32000	14500	4200	1900
52	6,390	40,000	68,000	36	914	30	762	5	107	2720	98	2490	98	2490	45	1145	70000	31750	18000	8200	64000	29000	34000	15500	4200	1900
								6	117	2970	98	2490	98	2490	45	1145	78000	35400	19000	8600	72000	32700	41000	18600	4850	2200
								7	127	3225	98	2490	98	2490	45	1145	87000	39500	21000	9500	80000	36300	48000	21800	5500	2500
								8	140	3555	98	2490	98	2490	45	1145	96000	43500	24000	11000	86000	39900	55000	25000	6150	2800
62	5,350	56,000	95,000	42	1067	36	914	5	118	3000	112	2845	114	2900	53	1350	108000	49000	28000	12700	100000	45400	53000	27000	6500	3000
								6	130	3300	112	2845	114	2900	53	1350	122000	55500	30000	13600	112000	50800	64000	29000	7550	3400
								7	145	3680	112	2845	114	2900	53	1350	136000	62000	34000	15500	125000	56700	75000	34000	8600	3900
								8	157	3990	112	2845	114	2900	53	1350	150000	68000	38000	17300	137000	62100	85000	39000	9650	4400
74	4,500	79,000	135,000	48	1219	42	1067	5	134	3400	130	3300	135	3430	62	1575	161000	73000	40000	18000	150000	68000	80000	36300	10000	4500
								6	154	3910	130	3300	135	3430	62	1575	182000	82500	43000	19500	169000	77000	96000	43500	11650	5300
								7	168	4270	130	3300	135	3430	62	1575	202000	91500	50000	22700	187000	85000	112000	50800	13300	6000
								8	181	4600	130	3300	135	3430	62	1575	223000	101000	56000	25400	206000	93500	127000	57600	14900	6800
88	3,800	110,000	190,000	60	1524	48	1219	5	156	3960	150	3810	156	3965	71	1810	252000	114500	63000	28600	236000	107000	127000	57600	16100	7300
								6	179	4550	150	3810	156	3965	71	1810	285000	129500	67000	30400	266000	121000	152000	69000	18700	8500
								7	195	4950	150	3810	156	3965	71	1810	318000	144500	78000	35400	298000	134000	177000	80300	21400	9700
								8	211	5360	150	3810	156	3965	71	1810	351000	159000	89000	40400	328000	148000	202000	91500	24000	11000

T-3-87CI

B.4 SHORTCUT (GRAPHICAL) METHOD OF DETERMINING APPROXIMATE PERFORMANCE OF SULZER CENTRIFUGAL COMPRESSORS*

The calculation procedures given in the following pages permit

To determine:	Compressor size and type	
	• Nominal diameter	D (m)
	• Number of stages	z
	Power input	P (kW)
	Speed	n (r/min)
	Absolute discharge temperature	T_2 (K)
Using:	Mass flow	m (kg/s)
	Suction pressure	p_1 (bar abs)
	Absolute suction temperature	T_1 (K)
	Relative humidity	ϕ_1 (%)
	Discharge pressure	p_2 (bar abs)
	Molecular mass	M (kg/kmol)
	Isentropic exponent	k
	Compressibility factor	Z

The following factors, symbols and indices are also used:

	Actual suction volume flow	V_1 (m^3/s)
	Absolute humidity	x
	Peripheral speed	u (m/s)
	Head (polytropic)	h_p (kJ/kg)
	Temperature difference ($\Delta T = T_c - T_1$)	ΔT (K)
	Intercooling power factor	f
Indices	Suction conditions	1
	Discharge conditions	2
	Dry	t
	Wet	f
	Polytropic	p
	per casing	G
	per group of stages (between two coolings)	S
	Uncooled	*
	After cooling	c
	Total	T
	Number of casings	i
	Number of intercoolings	j

How to Use the Diagrams A guide to the selection diagrams and two examples are given in Table B.1, one with air in one casing, the other with gas in two casings.

---

* These graphical methods are intended for screening studies only. Contact the manufacturer for more definitive layout and performance prediction.

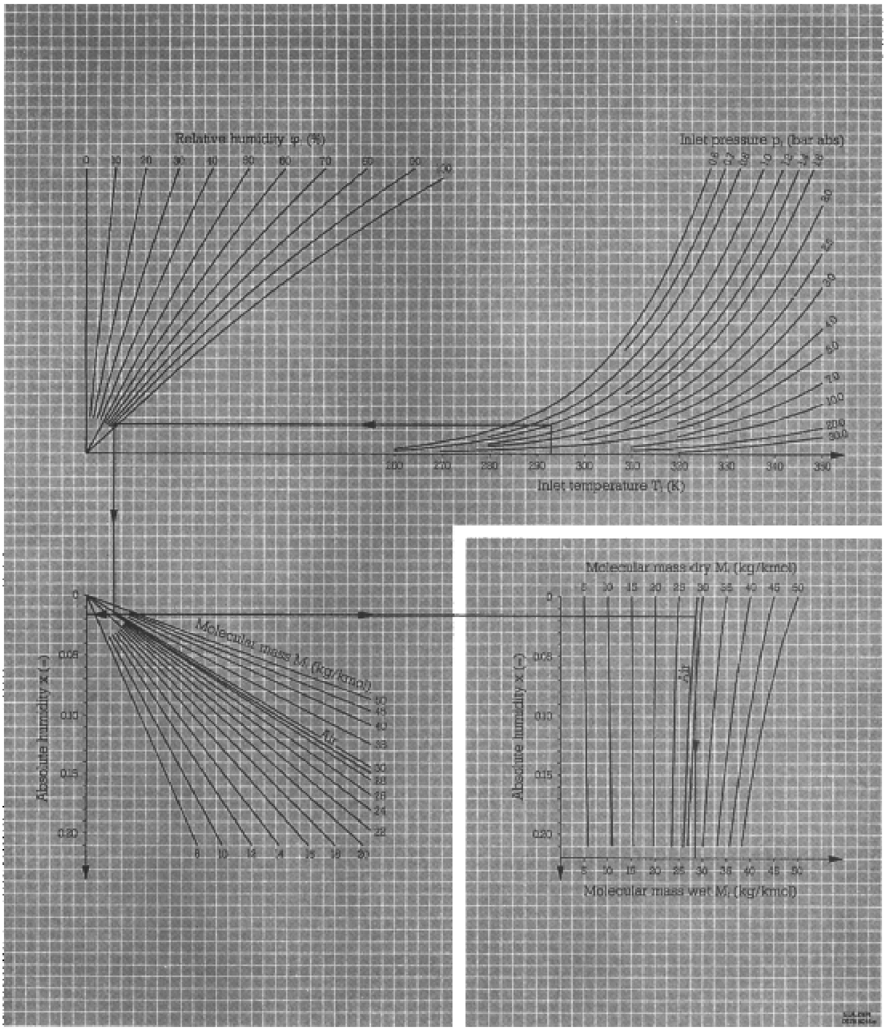

Diagram 1

Determination of the absolute humidity x
($T_i \to p_i \to \varphi_i \to M_t \to x$)

Diagram 2

Determination of the molecular mass M_f
of the wet gas ($x \to M_t \to M_f$)

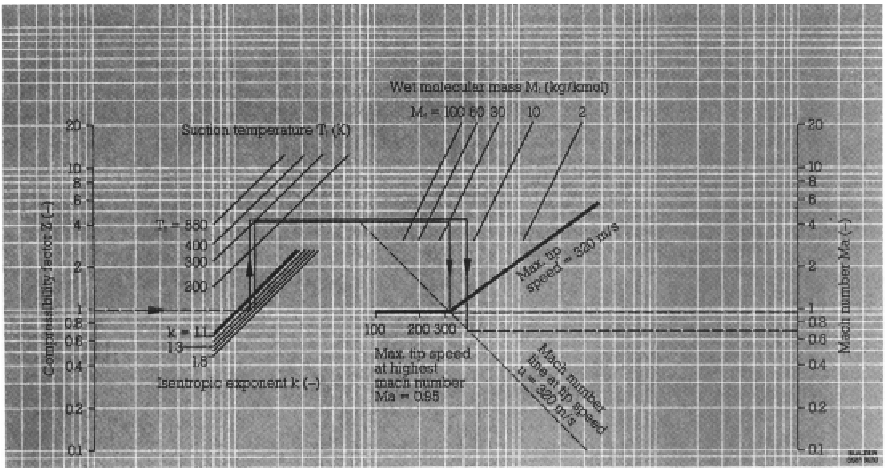

Diagram 3
Determination of the max. permissible peripheral speed u_{max} ($Z \to k \to T_1 \to M_f \to u_{max}$)

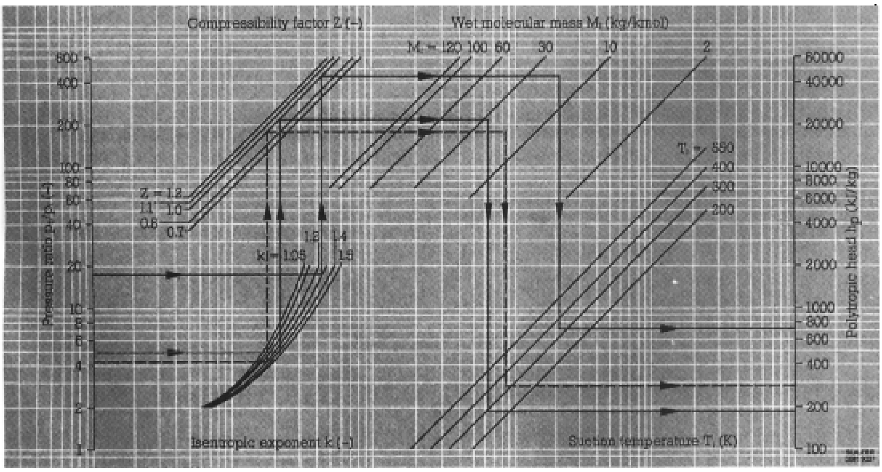

Diagram 4
Determination of the polytropic head h_p
($k \to p_2/p_1 \to Z \to M_f \to T_1 \to h_p$)

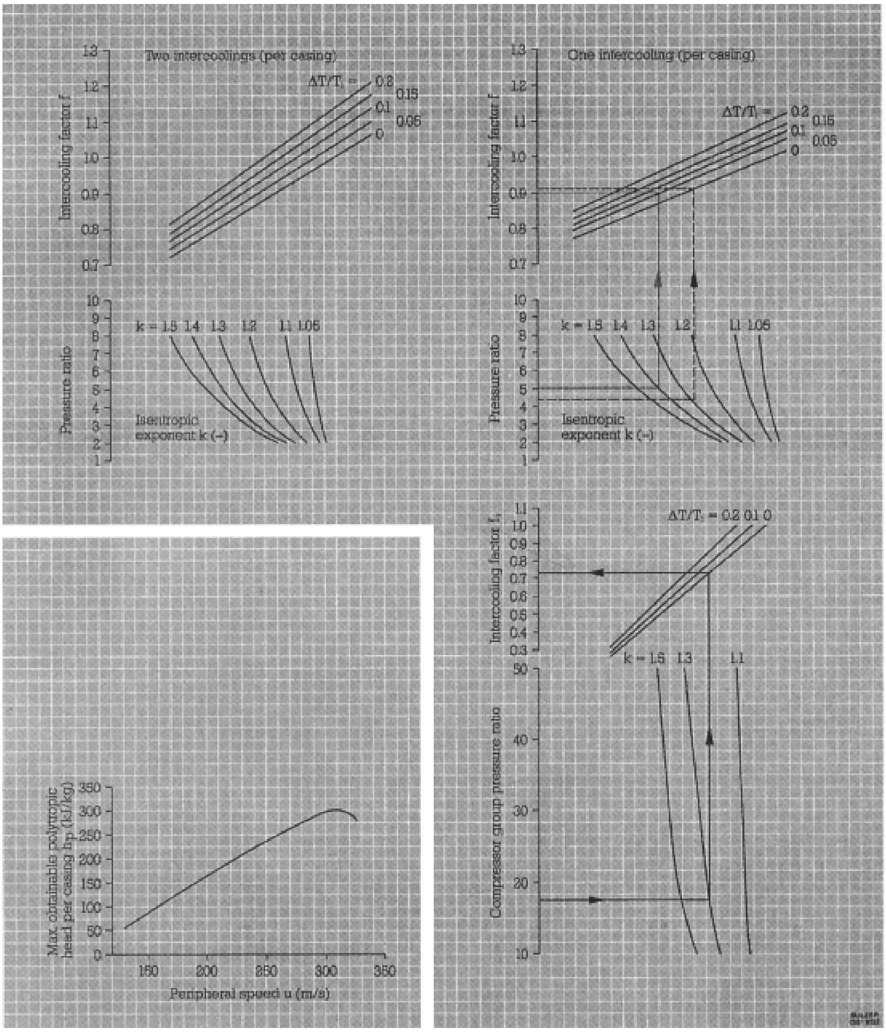

Diagram 5
Determination of the obtainable polytropic head per casing $h_{pC\ max}$ ($u_{max} \rightarrow h_{pC\ max}$)

Diagram 6
Determination of the influence of intercooling on the required shaft power

($p_2/p_{1G} \rightarrow K \rightarrow \Delta T \rightarrow T_1 \rightarrow$ estimated number of intercoolings per casing $i \rightarrow f$)

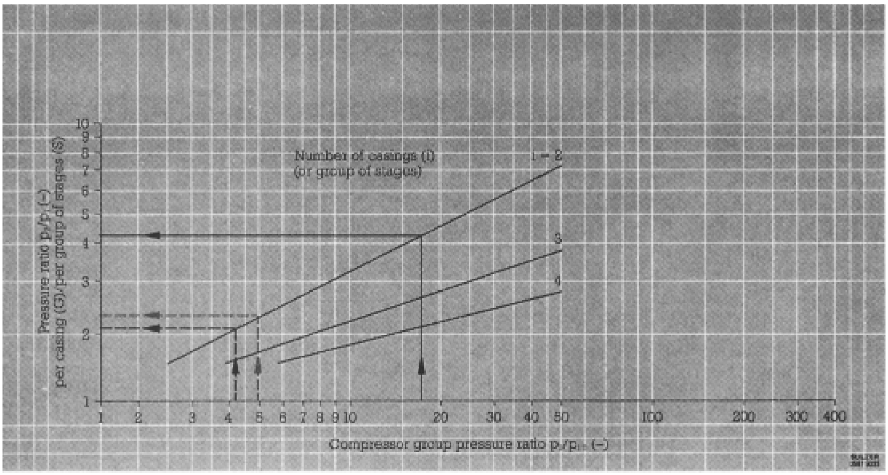

Diagram 7
Determination of the pressure ratio per casing p_2/p_1

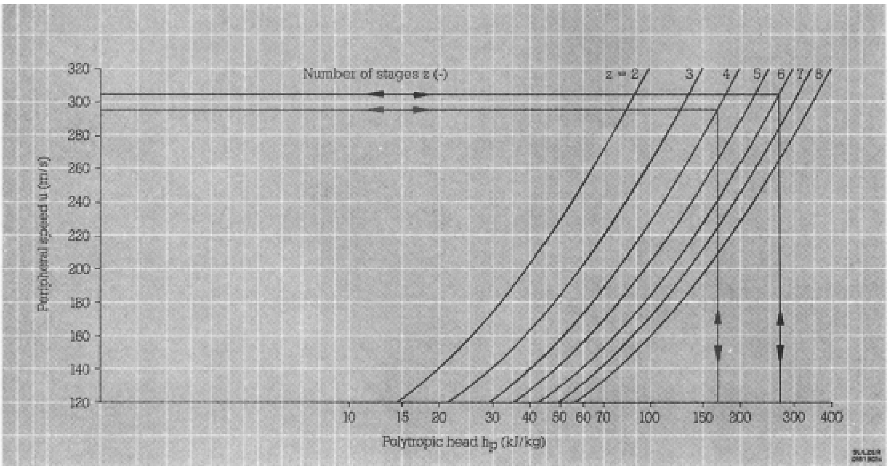

Diagram 8
Determination of the number of stages z of the compressor $(h_p \rightarrow z \leftrightarrow u)$. From u_{max} determined with Diagram 3, round off z to the whole number and correct peripheral speed accordingly

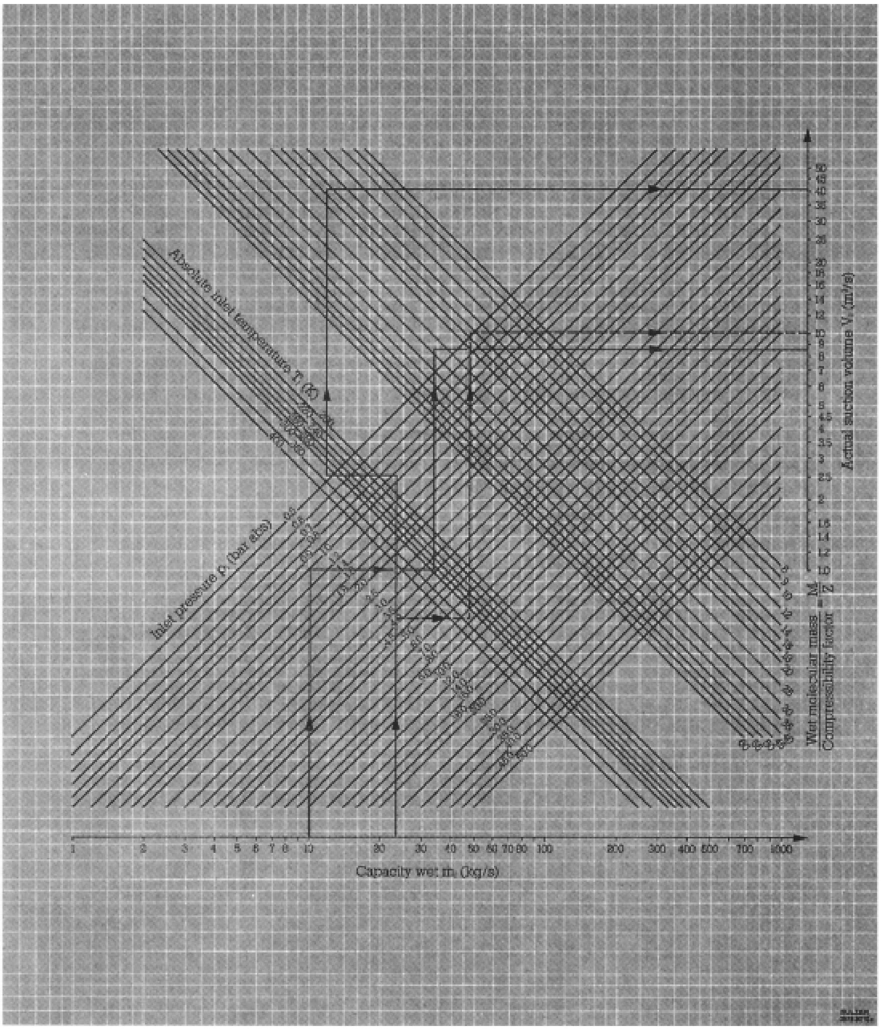

Diagram 9
Determination of the actual suction volume $\dot{V}_1$ ($\dot{m}_f \rightarrow p_1 \rightarrow T_1 \rightarrow M_f \rightarrow Z \rightarrow \dot{V}_1$)

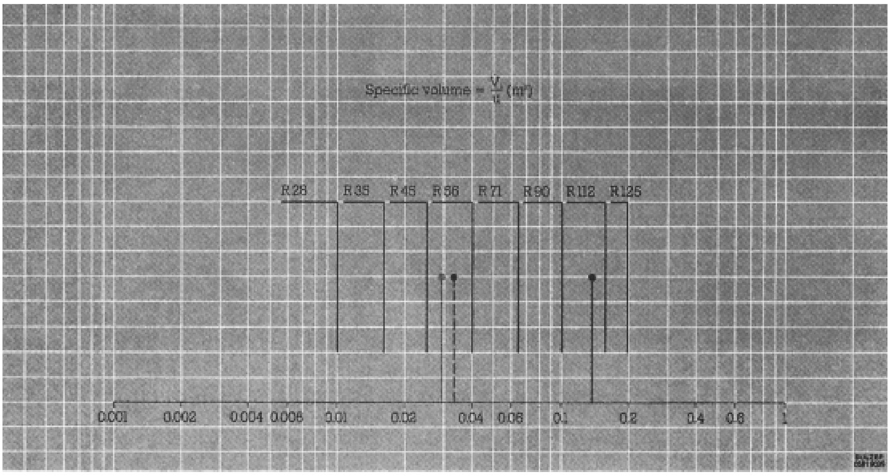

Diagram 10
Selection of the compressor size: nominal diameter D (cm) as a function of $\frac{\dot V_1}{u}$, where $\dot V_1$ = suction volume (m³/s) and u = peripheral speed (m/s)

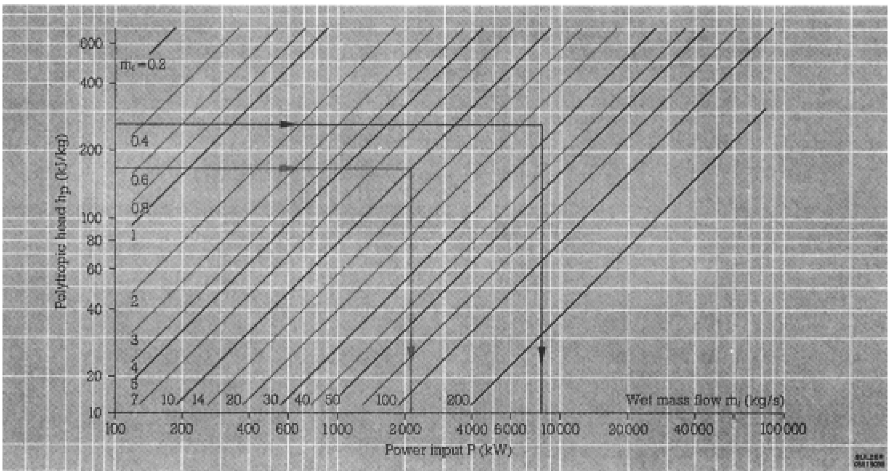

Diagram 11
Determination of the power input P
(h_{po} × $\dot m_t$ = P)

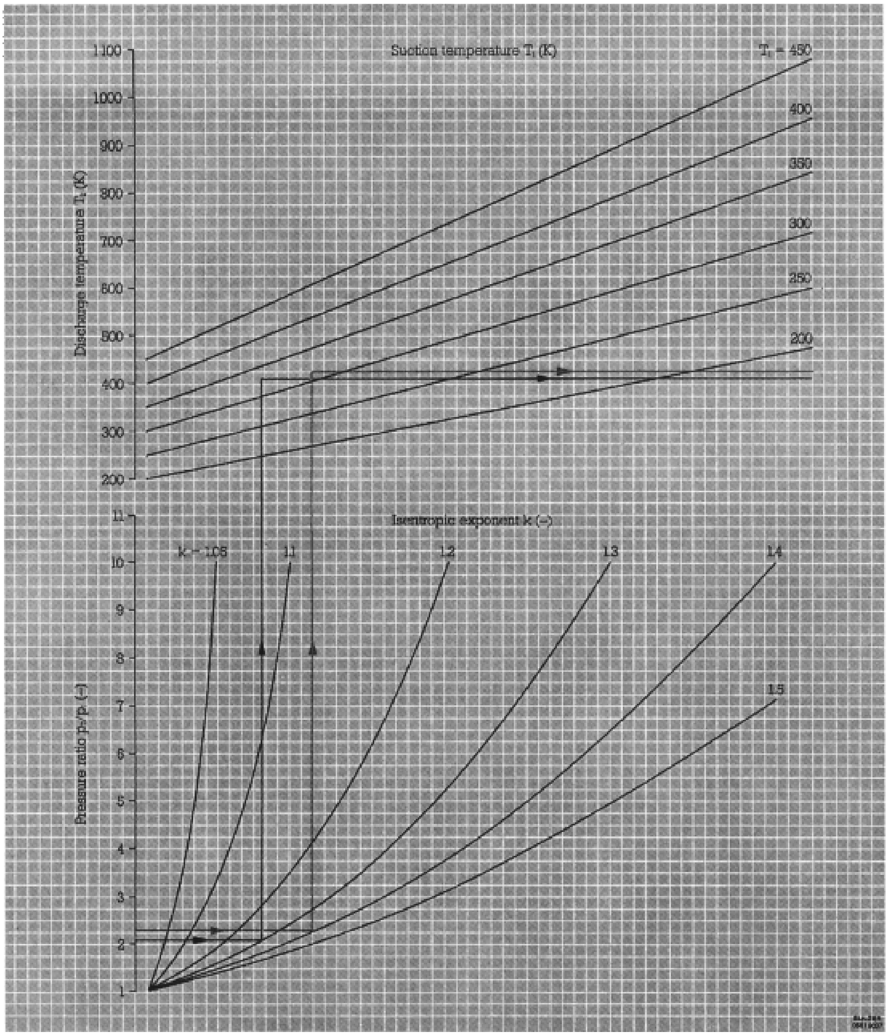

Diagram 12

Determination of the discharge temperature T_2 ($p_2/p_1 \rightarrow K \rightarrow T_1 \rightarrow T_2$)

k = isentropic exponent (–)

TABLE B.1 Selection and Performance Calculation of a Centrifugal Compressor Train

	Calculation Example 1: Air Compressor, One Casing	Calculation Example 2: Gas Compressor, Two Casings
Given:		
Capacity	$\dot{m}_t = 10\,kg/s$	$\dot{m}_t = 23.66\,kg/s$
Suction pressure	$p_1 = 1$ bar abs	$p_1 = 0.92$ bar abs
Suction temperature	$T_1 = 293\,K$	$T_1 = 333\,K$
Relative humidity	$\varphi_1 = 90\%$	$\varphi_1 = 0\%$
Discharge pressure	$p_2 = 5$ bar abs	$p_2 = 16.1$ bar abs
Dry molecular mass	$M_t = 28.95\,kg/kmol$	$M_t = 17.03\,kg/kmol$
Isentropic exponent c_p/c_v	$k = 1.4$	$k = 1.29$
Compressibility factor	$Z = 1$	$Z = 1$
Calculation instructions		
1. Determination of the absolute humidity x (from T_1, p_1, φ_1, M_t) with Diagram 1	$x = 0.016$	$x = 0$
2. Determination of the wet molecular mass M_f (from x, M_t) with Diagram 2	$M_f = 28.7\,kg/kmol$	$M_t = M_f = 17.03\,kg/kmol$
3. Calculation of the wet mass flow $\dot{m}_f = \dot{m}_t\,(1 + x)$	$\dot{m}_f = 10(1 + 0.016)_f = 10.16\,kg/s$	$\dot{m}_f = \dot{m}_t = 23.66\,kg/s$
4. Determination of the max. permissible peripheral speed u_{max} (from Z, k, T_1, M_f) with Diagram 3	Electric motor $u_{max} = 320\,m/s$ Turbine $u_{max} = 290\,m/s$	Electric motor $u_{max} = 320\,m/s$ Turbine $u_{max} = 290\,m/s$
For further calculation, motor drive has been selected.		
5. Determination of the total polytropic head h^*_{pT} (from k, p_2, p_1, Z, M_f, T_1) with Diagram 4	$h^*_{pT} = 186\,kJ/kg$	$h^*_{pT} = 722.8\,kJ/kg$
6. Determination of the max. polytropic head obtainable per casing $h_{pG\,max}$ (from u_{max}) with Diagram 5	$h_{pG\,max} = 300\,kJ/kg$	$h_{pG\,max} = 300\,kJ/kg$
7. Calculation of number of casings i $i = h_{pT}/h_{pG\,max}$, with $h_{pT} = h^*_{pT} \cdot f_T$, whereby f_T has to be estimated with Diagram 6	$i = 1$	$i = 2$ with $f_T = 0.73$
8. Determination of the pressure ratio per casing p_2/p_{1G} with Diagram 7	$p_2/p_{1T} = p_2/p_{1G} = 5$	$p_2/p_{1G} = 4.27$
9. Determination of the polytropic head per casing h^*_{pG} (from k, p_2/p_{1G}, Z, M_f, T_1) with Diagram 4	$h^*_{pG} = h^*_{pT} = 186\,kJ/kg$	$h^*_{pG} = 293\,kJ/kg$

From now on if two or more casings are necessary, the calculation has to be made for each casing separately (one after the other).

		First casing	Second casing
10. Determination of the influence of intercooling on the required shaft power (from p_2/p_{1G}, K, ΔT, T_1 and estimated number of intercoolings per casing j) with Diagram 6	$f = 0.9$ with $\Delta T = 20$ and $j = 1$	$f = 0.91$ with $\Delta T = 0$ and $j = 1$	$f = 0.91$ with $\Delta T = 0$ and $j = 1$
11. Calculation of the fictive polytropic head $h_{pG} = h^*_{pG} \cdot f$	$h_{pG} = 186 \cdot 0.9$ $= 167.4\,\text{kJ/kg}$	$h_{pG} = 293 \cdot 0.91$ $= 266.6 \cong 267\,\text{kJ/kg}$	$H_{pG} = 293 \cdot 0.91$ $= 266.6 \cong 267$
12. Determination of the number of stages z per casing and the definite peripheral speed u (from h_{pG}, $z \rightarrow u$) with Diagram 8 (round off z to whole number and correct peripheral speed correspondingly)	$z = 4$ $u = 295\,\text{m/s}$	$z = 6$ $u = 304\,\text{m/s}$	$z = 6$ $u = 304\,\text{m/s}$
13. Determination of the actual suction volume $\dot{V}_1$ (from $\dot{m}_f$, p_1, T_1, M_f, Z) with Diagram 9	$\dot{V}_1 = 8.59\,\text{m}^3/\text{s}$	$\dot{V}_1 = 41.8\,\text{m}^3/\text{s}$	$\dot{V}_1 = 10.2\,\text{m}^3/\text{s}$
14. Selection of the compressor size (nominal diameter D) as a function of $\dot{V}_1$ with Diagram 10	$D = 56\,\text{cm}$	$D = 112\,\text{cm}$	$D = 56\,\text{cm}$
15. Type designation (from steps 10, 12, 14)	RZ 56-4	RZ 112-6	RZ 56-6
16. Calculation of the speed $n = \dfrac{60 \cdot u}{\pi \cdot D} =$ (D in meters)	$n = \dfrac{60 \cdot 295}{\pi \cdot 0.56} = 10060\,\text{r/min}$	$n = \dfrac{60 \cdot 304}{\pi \cdot 1.12} = 5184\,\text{r/min}$	$n = \dfrac{60 \cdot 304}{\pi \cdot 0.56} = 10368\,\text{r/min}$
17. Determination of the power input P (from h_{pG}, $\dot{m}_f$) with Diagram 11	$P = 2173\,\text{kW}$	$P = 8100\,\text{kW}$	$P = 8100\,\text{kW}$ Total train 16200 kW
18. Determination of the discharge temperature T_2 (from p_2/p_1 between intercooling, k, T_1) with Diagram 12 whereby T_1 is the suction temperature after preceding intercooling and pressure ratio p_2/p_1 between intercooling has to be determined with Diagram 7	$T_2 = 424\,\text{K}$ with $T_1 = 333\,\text{K}$ and $p_2/p_1 = 2.3$	$T_2 = 413\,\text{K}$ with $T_1 = 333\,\text{K}$ and $p_2/p_1 = 2.1$	$T_2 = 413\,\text{K}$ with $T_1 = 333\,\text{K}$ and $p_2/p_1 = 2.1$

APPENDIX C

BIBLIOGRAPHY AND LIST OF CONTRIBUTORS

A-C Compressor Corporation, Appleton, Wisconsin

Ro-Flo Sliding Vane Compressor, Form 101.

Aerzen USA, Coatesville, Pennsylvania

Aerzen Environmental Technology, Form G1-003/01/EN.
The Compact II, Form 92-318.
Aerzen Process Gas Screw Compressors, Form 800/4.91.
Aerzen VMTS-type Air Screw Compressors, Form 1000/6.91.
Aerzen Rotary Screw Compressors, VMY-series, Form 300/1.94.
Aerzen Screw Compressor Package Series VML, Form 2000/8.88.
Aerzen VM 37-series Screw Compressors, Form 300/1.92.
Aerzen Screw Compressors, Form 1000/9/93.

Anglo Compression, Inc., Mount Vernon, Ohio

Modern High-Efficiency Compressor Valves, Bulletin 201.
High-Reliability Reciprocating Compressor Pistons, Form 401.
Customized Compressor Cylinder Design and Manufacture, Bulletin 321.

Ausdel Pty, Ltd., Cheltenham, Victoria, Australia

Hydroscav Gas Stripping Technology Bulletin, Form 234.

A Practical Guide to Compressor Technology, Second Edition, By Heinz P. Bloch

Bently-Nevada Corporation, Minden, Nevada

TorXimitor® Torque Meters, Form AN-058.

BHS-Voith Getriebewerk G.m.b.H., Sonthofen, Germany

Gear Units, Form P 1/8-91.

Cooper Industries, Mount Vernon, Ohio

Compressor Systems for the Process, Petrochemical, and Production Industries, Form 9-206A.
Damped-Plate Compressor Valves, Form DPVB-681(A)-5MH.
EPV-750 High-Efficiency Poppet Valves, Form 1-205.
ESV-500 Compressor Valves, Form CCVB-979-10 MHG.
Penn Horizontal Balanced-Opposed Process Compressors, Form 9-201 A.
Reciprocating Gas Compression Systems for Enhanced Oil Recovery, Form EOR-0384-5MHOL.
Tandem/Truncated Cylinder Configurations, Form 9-204 A.

Compressor Controls Corporation, Des Moines, Iowa

Compressor Control and Surge Abatement Instruction Manual, Form IM30.
Compressor Control Strategies, installation and teaching aids.
Batson, Brett, *Control System Objectives and Implementation*, (special manuscript prepared for inclusion in this text).

Coupling Corporation of America, Jacobus, Pennsylvania

Flexxor Coupling, Form 5M281.

Demag Delaval Turbomachinery, Trenton, New Jersey

MH/MV Centrifugal Compressors, Mannesmann Demag Verdichter Form MA 25.40 E/10.93.
Process Compressors, Mannesmann Demag Verdichter und Drucklufttechnik Form MA 10.15 en/4.89.
Centrifugal Compressors, Mannesmann Demag Verdichter und Drucklufttechnik Form MA 25.40 en/10.82.
Centrifugal Compressors for the Oil and Gas Industry, Mannesmann Demag Verdichter und Drucklufttechnik Form 25.70/02.90 E.
Salisbury, Roy J., *Lube, Seal and Control Oil Systems for Turbomachinery*, customer training course and technical manuscript.

Dresser Industries, Inc., Roots Division, Connersville, Indiana

Universal RAI Rotary Positive Displacement Blowers, Form B-5125.
Whispair Blowers, Form B-5219.

Dresser-Rand Company, Engine Process Compressor Division, Painted Post, New York

BDC Balanced-Opposed Compressors for Process Applications, Bulletin 3650.
Beyer, R. W., *Reciprocating Compressor Performance and Sizing Fundamentals*.
Gas Properties and Compressor Data, Form 3519-D.

HHE-FA/FB Balanced-Opposed Process Compressors, Form 85077.

HHE Heavy Duty Process Compressors, Form 85084.

HHE Heavy Duty Reciprocating Process Compressors, Form 3596.

Lentek, G. A., *Reciprocating Compressors*.

PHE Balanced-Opposed Process Compressors, Form 85068.

Schaad, R. G., *Reciprocating Compressor Drive Systems*.

———, *Reciprocating Process Compressor Designs and Applications*.

TCV Engine Compressors, Form 85083.

Woollatt, D., H. Wertheimer, and R. Beyer, *Design and Application of Compressor Valves for Reliability and Efficiency*.

Elliott Company, Jeannette, Pennsylvania

Elliott PAP-Plus Plant Air Package Compressor, Bulletin P-29.

Hallock, Donald C., *Centrifugal Compressors and the Cause of the Curve,* Elliott Reprint 93-476-MOY.

Quick Selection Methods for Elliott Multistage Compressors, Bulletin P25A.

Elliott Multistage Centrifugal Compressors, Bulletin P-25C.

Peter, Kenneth L., *Applying Multiple Inlet Compressors*, (also published in *Hydrocarbon Processing*, May 1981).

Flexibox, Inc., Houston, Texas

Flexible Couplings, Engineering Catalog 100CC.

Indikon Division of Metravib Instruments, Cambridge, Massachusetts

Indikon Torquemeters and On-Stream Alignment Monitors, Form 484.

KMC Inc., West Greenwich, Rhode Island

Flexure Pivot Tilt Pad Bearings, Bulletin 101.

Thrust-Type Flexure Pivot Bearings, Bulletin 201.

Lincoln Division of McNeil Corporation, St. Louis, Missouri

Modular Lube Centralized Lubricating Systems, Form 440503.

Lubrication Systems Company, Houston, Texas

Customized Lube and Seal Oil Skids for Turbomachinery, Form 101.

Lubriquip, Inc., Cleveland, Ohio

Pump-To-Point Lubricators, Bulletins 10102, 51020, and 51040.

Lucas Aerospace Corporation, Bendix Fluid Power Division, Utica, New York

Bendix Contoured Diaphragm Coupling.

Bendix Flexible Diaphragm Couplings, Pub. No. 67U-6-717A/B.

Contoured Flexible Diaphragm Couplings, Pub. No. 67-U-9-7811-B.

Lucas Contoured Diaphragm Couplings, Pub. No. 67-U-6-919A.

Lucas Contoured Diaphragm Couplings, Pub. No. 67-U-6-8811A.

Nash Engineering Company, Norwalk, Connecticut

Liquid Ring Compressors For The Process Industries, Bulletins 819-A, 836-A, and 455-A.

Nuovo Pignone, Florence, Italy

Beni, P., and A. Traversari, A*pproaches to the Design of a Safe Secondary Compressor for High Pressure Polyethylene Plants*.

Agostini, M., and E. Giacomelli, *Safety, Operation and Maintenance of LDPE Secondary Compressors*, Quaderni Pignone 52.

Tosi, G., A. Timori, and M. Stangarone, *Rotordynamics in Centrifugal Compressors*, Quaderni Pignone 48.

PPI Division, The Duriron Company, Inc., Warminster, Pennsylvania

Metal Diaphragm Compressors, Bulletins PD-400C, HP-100, HP-400, and HP-410.

Pressurized Bearing Company, Minden, Nevada

Fluid-generated instabilities, sales literature.

Rotordynamics—Seal Research, North Highlands, California

Honeycomb Labyrinth Seal Technology for Turbomachinery, Form 401.

Sulzer-Burckhardt Engineering Works, Ltd., Winterthur, Switzerland

Klaey, H., *The Laby Compresses Gases Economically, Sulzer Technical Review,* 3/1990.

Labyrinth Compressors, Bulletin 21.05.14.40.

Matile, C., *Industrial Reciprocating Compressors for Very High Pressures, Sulzer Technical Review,* 2/1971.

Reciprocating Process Compressors, Bulletin 22.00.14.40.

Sulzer Turbosystems International, Houston, Texas; New York, New York; and Winterthur, Switzerland

Turbocompressors, Form STI 892/3M.

Sulzer Axial Compressors, Form 26.13.10.40—Bhi 30.

Sulzer Isotherm Turbocompressors, Form 20.14.10.40—Bid 50.

Sulzer Turbocompressors, Form 25.01.10.40—Aid 15.

Buchel, A., *Basic Design Features of Sulzer Turbocompressors—Applications in the Hydrocarbon Processing Industries*, Form e/27.13.10-Cgh.

Wachter, M., *Some Special Design Aspects of Turbocompressors for the Oil, Gas and Petrochemical Industry*.

Sulzer Centrifugal Compressors, Form 27.20.10.40—Chi 30.

Sulzer Centrifugal Barrel Compressors, Form 27.24.10.40—Bhi 50.

Marriott, A., J. Ryrie, and D. Gilon, *Mopico Compressor for Gas Pipeline Stations, Sulzer Technical Review*, 1/1991.

Marriott, A., and D. Gilon, *Initial Experience With A New High-Speed, High-Pressure, Oil-Free Motor Compressor Unit (HOFIM). Instit. of Mechanical Engineers*, C449/038/93 (1995).

Torquetronics, Inc., Allegany, New York

Torquetronics Shaft Torque Monitoring Instrumentation, Form 345.

Revolve Technologies, Inc., Calgary, Alberta, Canada

Brallean, G. E., W. M. Grasdal, V. Kulle, C. P. Oleksuk, and R. A. Peterson, *The Application of Active Magnetic Bearings to a Power Turbine*, ASME Paper 90-GT-199, 1990.

Eakins, P. S., and T. J. Al-Himyary, *Dry Gas Seal and Magnetic Bearing Systems for Natural Gas Pipeline Compressors*, Nova Corporation, Calgary, Alberta, 1991.

Eakins, P. S., C. R. Feldmeyer, and A. G. St. Onge, *Operating Experience with Active Magnetic Bearings in a Power Turbine, Proceedings, CGA Symposium on Industrial Applications of Gas Turbines*, 1991.

Foster, E. G., V. Kulle, and R. A. Peterson, *The Application of Active Magnetic Bearings to a Natural Gas Pipeline Compressor*, ASME Paper 86-GT-61, 1986.

Hesje, R. C., and R. A. Peterson, *Mechanical Dry Seal Applied to Pipeline (Natural Gas) Centrifugal Compressors*, ASME Paper 84-GT-3, 1984.

Sears, J. E., and S. O. Uptigrove, *Development and Operation of a Dual Hard Face Dry Gas Seal. Proceedings, Revolve '89*, 1989.

Zurn Industries, Inc., Erie, Pennsylvania

Ameriflex and Amerigear High Performance Couplings, Form 673ADV, 10/88.

Amerigear: Introduction, Design and Manufacturing, Form 462ADV, 8/81.

Ameriflex Flexible Diaphragm Coupling, Form No. 271-ADV, Rev. 4/74.

Individual Contributors

Bloch, H. P., and P. W. Noack, *The Expanded Capabilities of Screw Compressors, Chemical Engineering*, Feb., 1992, pp. 100–108.

Bloch, H. P., and P. W. Noack, *Recent Experience With Large Liquid-Injected Rotary Screw Process Gas Compressors,* presented and published in the *Proceedings of the 20th International Turbomachinery Symposium*, Texas A&M University, Dallas, Texas, 1991.

Calistrat, M., *Flexible Couplings*, ISBN 0-9643099-0-4, Caroline Publishing, P.O. Box 451611, Houston, Texas 77245-1611.

Chow, R., B. McMordie, and R. Wiegand, *Coatings Limit Compressor Fouling, Turbomachinery International*, Jan./Feb. 1995.

Godse, A., *Predict Compressor Performance at New Conditions, Hydrocarbon Processing*, June 1989, pp. 77–79.

INDEX

A Practical Guide to Compressor Technology, Second Edition, By Heinz P. Bloch