MEGA MOTOR

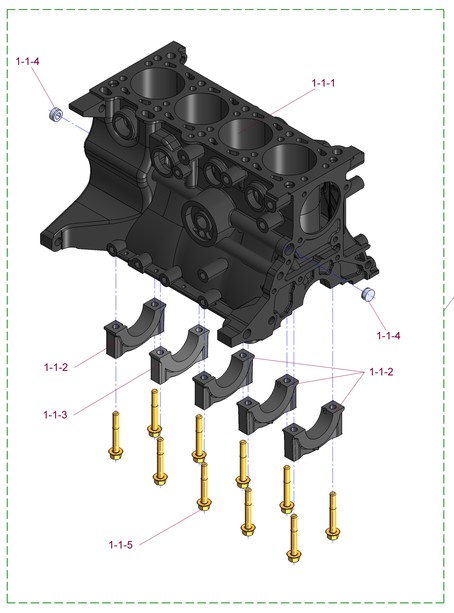

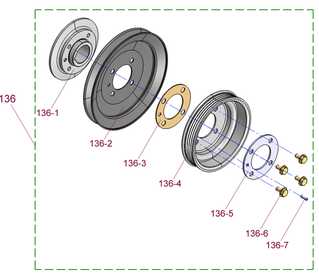

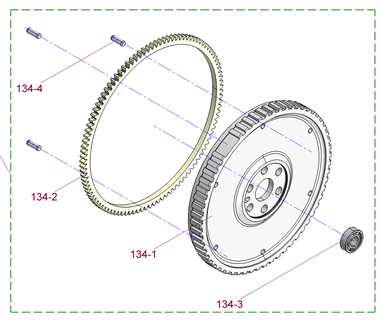

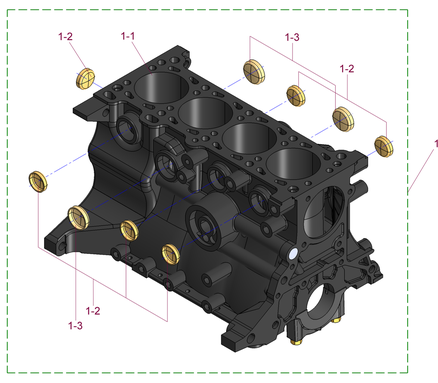

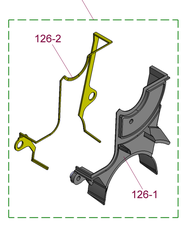

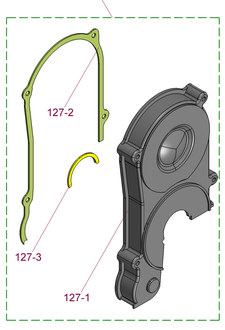

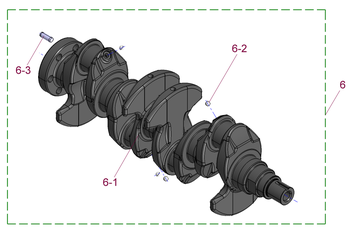

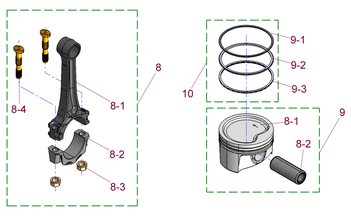

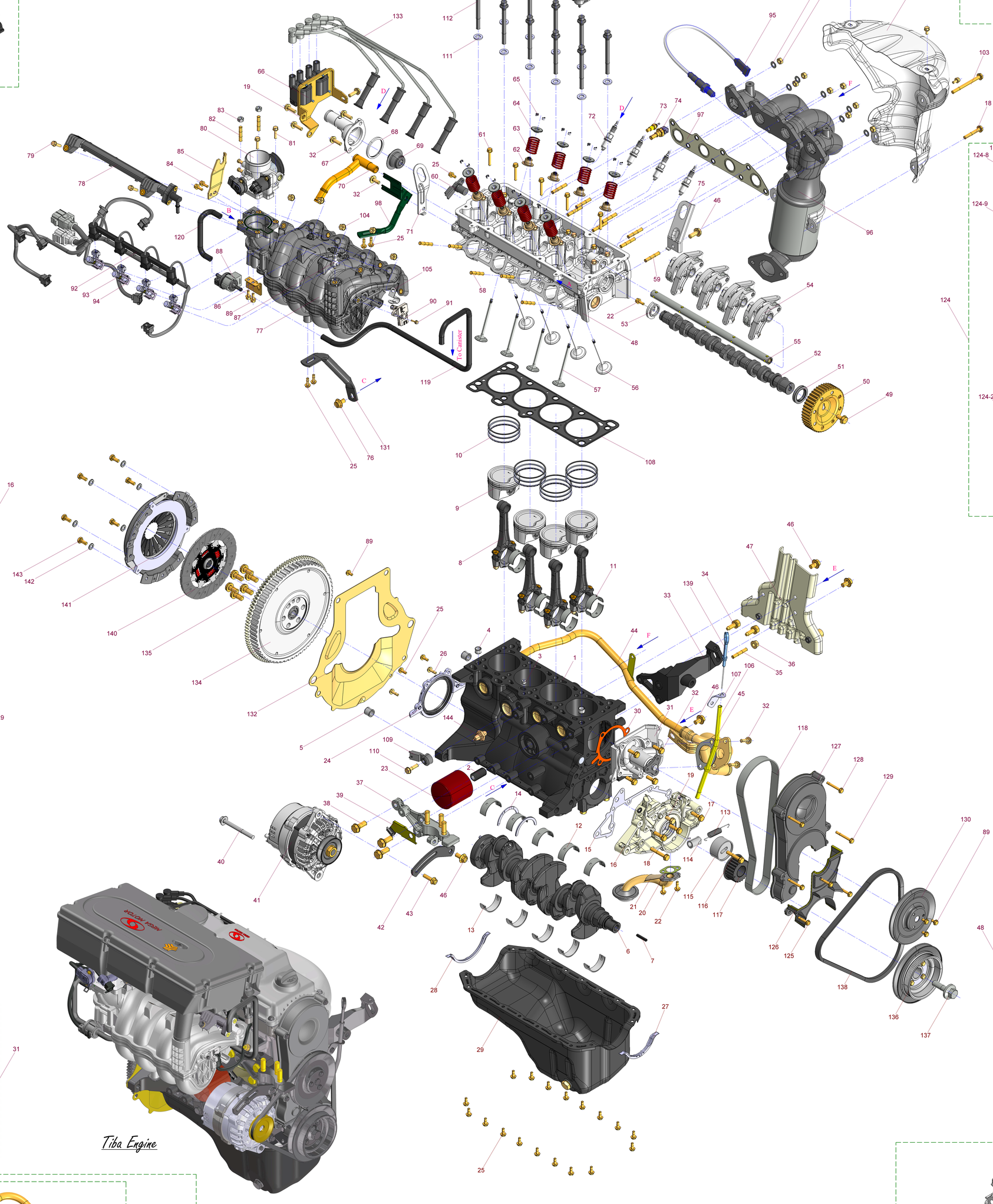

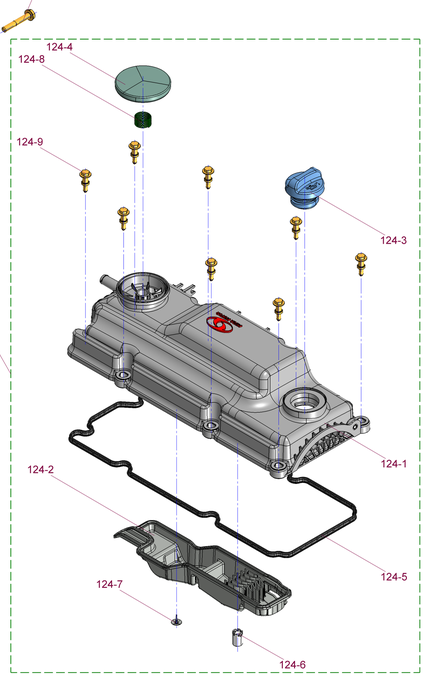

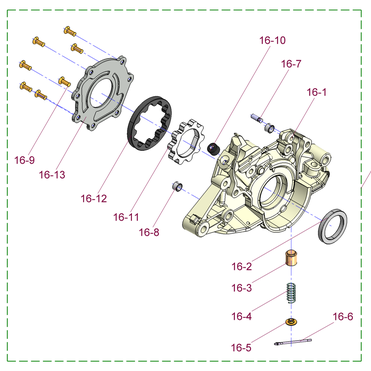

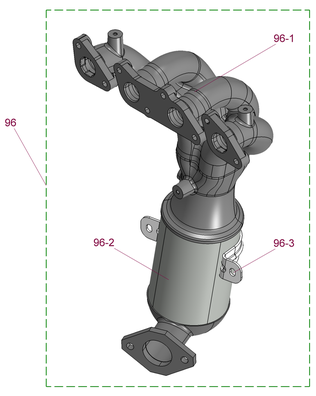

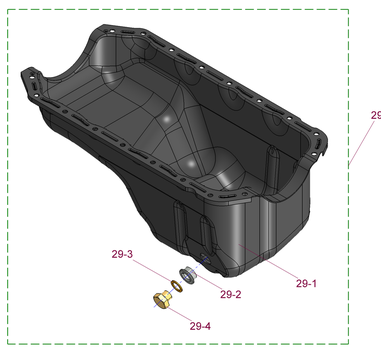

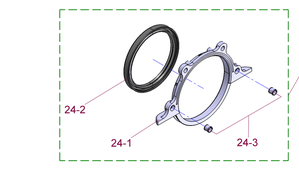

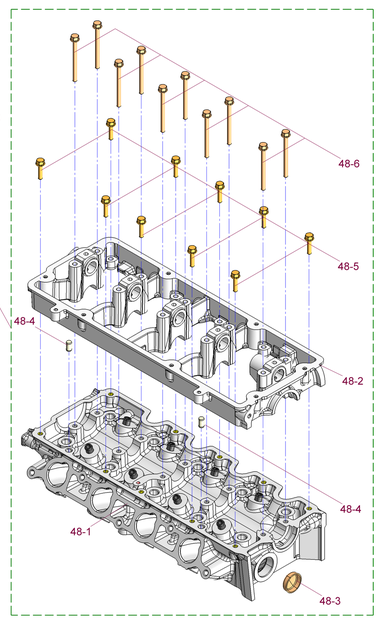

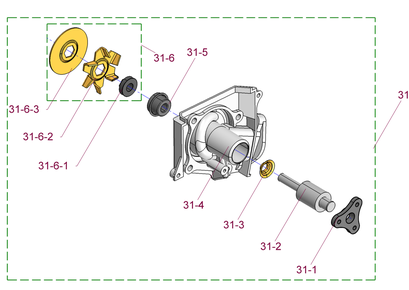

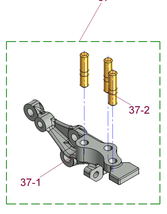

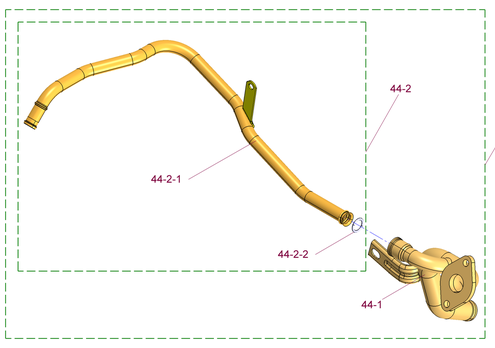

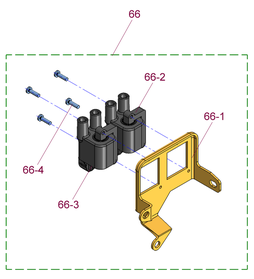

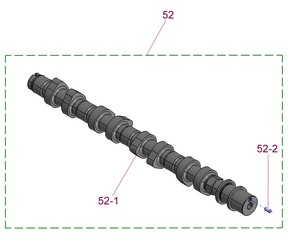

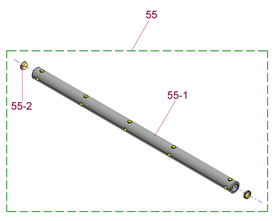

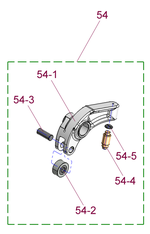

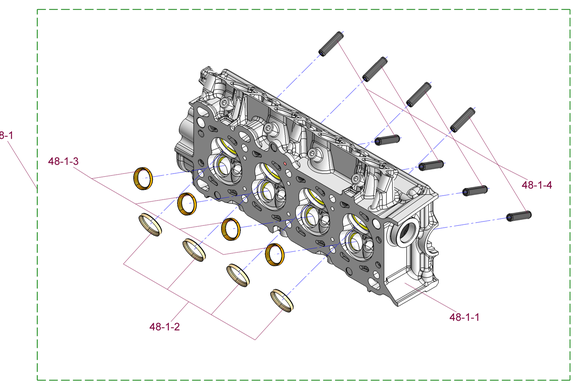

No	Name	Part No	QTY
145	AIR FILTER BOX ASSY	TN030 - 16500B	1
144	SWITCH . OIL PRESSURE	KK150 - 18 - 501D	1
143	BOLT DISK CLUTCH	K9YA00 - 0804	6
142	WASHER – SPRING	K99971 - 0800	6
141	COVER ASSY . CLUTCH	TN030 - 30200	1
140	DISK ASSY CLUTCH	TN030 - 30100	1
139	GAUGE ASSY OIL	MB675- 10 - 450A	1
138	BELT - V	KKY01 - 18 - 381A	1
137	BOLT - CRANK SHAFT PUL	MB3C7- 11 - 406	1
136-7	PARALLEL PIN	K99225 - 0412	1
136-6	BOLT	IH13I - 11 - 405	4
136-5	SPACER	KK3C7 - 11 - 408	1
136-4	PULLEY C.SHAFT	KBJ04 - 11 - 403	1
136-3	SPACER PULLEY	MB64N - 11 - 409	1
136-2	PULLEY C.SHAFT	MB359 - 11 - 401A	1
136-1	BOSS PULLEY	MB3C7 - 11 - 411A	1
136	PULLEY ASSY C.SHAFT	IH13I - 11 - 400	1
135	BOLT - FLYWHEEL LOCK	MB376 - 11 - 511	6
134-4	FLYWHEEL PIN	K99233 - 0822	3
134-3	BEARING PILOT	KKY01 -11 - 303	1
134-2	GEAR RING - FLYWHEEL	MB301 - 11 - 502	1
134-1	FLYWHEEL	M13NI - 11 – 501A	1
134	FLYWHEEL ASSY	M13NI - 11 – 500A	1
133	CORD SET.HI TENSION	M13IC - 18 - 140	1
132	END PLATE	KKY01 - 10 - 901	1
131	STAY MANIFOLD	TN030 - 14008	1
130	PULLY WATER PUMP	MB376 - 15 - 131	1
129	BOLT STAY OIL LEVEL .G	K90794 - 0650	1
128	BOLT - UPPER COVER	K99794 - 0645	3
127-3	GASKET	MB630 - 10 - 513	1
127-2	GASKET - COVER - T. BELT	MB630 -10 - 512A	1
127-1	COVER T. BELT UP	MB630 - 10 - 511B	1
127	COVER ASSY UP	MB630 -10 - 510B	1
126-2	GASKET - COVER - T. BELT	MB630 - 10 - 502B	1
126-1	COVER - T.BELT .LWR	KK150 - 10 - 501	1
126	COVER ASSY LWR	KK150 - 10 - 500	1
125	BOLT - LOWER COVER	K99794 - 0630	3
124-9	COLLAR SCREW	70355114	1
124-8	SPRING	79821505	6
124-7	DRAIN	------	1
124-6	DRAIN DIAPHRAGM	------	1

No	Name	Part No	QTY
124-5	FLANGE SEALING	70354001	1
124-4	COVER	79821547	1
124-3	OIL CAP	70303219	1
124-2	OIL SEPARATOR HOUSING	70354004	1
124-1	CYLINDER HEAD COVER	70353992	1
124	VALVE COVER ASSY	TN030 - 13210	1
123	AIR FILTER PIN	TN030 - 16517	2
122	HOSE CLIP	K99283 - 1400	2
121	HOSE VENTILATION	TN030 - 13249	1
120	PURGE CANISTER HOSE	TN030 - 18521	1
119	PURG MANIFOLD HOSE	TN030 - 18522	1
118	BELT TIMING	KK350 - 12 - 205	1
117	PULLY - T .B . CRANK	OK937 - 11 - 321	1
116	BOLT - TIMING TENSIONER	K99794 - 0845	1
115	TENSIONER - T. BELT	KK150 - 12 - 700A	1
114	DAMPRING RUBBER	KK150 - 12 - 711C/1	1
113	SPRING TENSIONER	KK150 - 12 - 711C/2	1
112	BOLT - CYL . HEAD	MB630 - 10 -135A	10
111	WASHER CYLINDER HEAD BOLT	KKY01 - 10 -138A	10
110	BOLT KNOCK SENSOR	K99794 - 0830	1
109	KNOCK SENSOR	M13IC - 18 - 530	1
108	GASKET CYLINDER HEAD	TN030 - 11053	1
107	STAY OIL LEVEL GAUGE	MB630 -10 - 445C	1
106	OIL PIPE - GAUGE ASSY	KB675 - 10 - 440	1
105	CLIP - PURGE HOSE	K99276 - 1208	1
104	NUT INTAKE MANIFOLD	K99940 - 0801	5
103	BOLT - BRACKET CCC - BELT	K99794 - 0890	1
102	BOLT HEAT SHIELD	K90794 - 0612	3
101	HEAT SHIELD UPPER - EXH.MANIFOLD - CCC	TN030 - 14021	1
100	NUT - EXH . MANIFOLD	K99901 - 0800	8
99	WASHER SPRING - EXH MANIFOLD	ME331 - 13 - 458	7
98	SIDE STAY MANIFOLD	TN030 - 14007	1
97	GASKET - EXHAUST MANIFOLD	TN030 - 14004	1
96-3	CCC - BELT	TN030 - 14031	1
96-2	CCC - CATALYST ASSY	TN030 - 14023	1
96-1	EXHAUST MANIFOLD - MACHINED - CCC	TN030 - 14022	1
96	CCC - EXHAUST MANIFOLD - ASSY	TN030 - 14020	1
95	OXYGEN SENSOR	M13IC - 18 - 861	1
94	INJECTOR CLIP	OK9BV - 13254	4
93	INJECTOR	M13IC-13-250	4
92	WIRING - HARNESS	TN030 - 18519	1
91	BOLT MAP SENSOR	K99794-0416	1

No	Name	Part No	QTY
90	TMAP SENSOR	M13IC - 18 - 211	1
89	BOLT (Bracket Purge valve control_2, End Plate_1, Water pump pully_3)	K99794 - 0612	6
88	CANISTER PURGE VALVE ASSY	M13IC - 18 - 741	1
87	AIR FILTER PIN PLASTIC INTAKE MANIFOLD	TN030 -16516	1
86	BRACKET - PURGE VALVE CONTROL	TN030 - 18501	1
85	ACCEL BRACKET	TN030 - 18512	1
84	BOLT ACCEL BRACKET	08120 - 61428	2
83	NUT - ELBOW	K99940 - 0601	2
82	STUD - ELBOW	K99851 - 0620	2
81	BOLT - THROTTLE TO 90 ° ELBOW	K99794-0625	2
80	THROTTLE ASSEMBLY	TN030 - 18510	1
79	BOLT FUEL RAIL	K99794 - 0635	2
78	PLASTIC FUEL RAIL	TN030 - 22130	1
77	PLASTIC INTAKE MANIFOLD ASSEMBLY	TN030 - 14050	1
76	BOLT BrKT Intake Manifold	K99794 - 1025	1
75	HANGER - ENG . F	TN030 - 11082	1
74	WATER TEM . SENSOR	M13IC -18 - 840	1
73	UNIT- HEAT GAUGE	KK150 - 18 - 51X	1
72	SPARK PLUG	M13GR - 18 - 110	4
71	HANGER - ENG . R	TN030 - 11081	1
70	WATER PIPE OUTLET	TN030 - 13020	1
69	THERMOSTAT	OK2A1 - 15 - 171	1
68	SEAL - THERMOSTAT	TN030 - 13008	1
67	COVER THERMOSTAT	KK348 - 15 - 172	1
66-4	BOLT COIL	TN030 - 18507	4
66-3	IGNITION COIL - 2,3	TN030 - 18504	1
66-2	IGNITION COIL - 1,4	TN030 - 18503	1
66-1	BRACKET IGNITION COIL	TN030 - 18506	1
66	IGNITION COIL ASSY	TN030 - 18505	1
65	LOCK - VALVE STEM	EN030 - 13204	16
64	RETAINER - VALVE SPRING	TN030 - 13203	8
63	SPRING - VALVE	TN030 - 13207	8
62	SEAL - VALVE STEM - VA09	EN030 - 13201	8
61	BOLT - AXIS ROCKER	TN030 - 11051	5
60	TDC SENSOR WITH O - RING	TN030 - 18516	1
59	STUD - EXH MANIFOLD	K99851 - 0830	8
58	STUD - INTAKE MANIFOLD	K99851 - 0825A	5
57	VALVE EXHAUST - MACHINED	TN030 - 13205	4
56	VALVE INLET MACHINED	TN030 - 13202	4
55-2	SEALING CAP	K99306 - 1200	2
55-1	AXIS ROCKER ARM MACHINED	TN030 - 13226	1
55	AXIS ROCKER ARM - ASSY	TN030 - 13225	1

No	Name	Part No	QTY
54-5	SUPPORT PLATE	F - 46314 - 0281	8
54-4	HYDROLIC LASH ADJUSTER	F - 46214.29	8
54-3	PIN	F - 346983 - 6521	8
54-2	ROLLER	F - 346983 - 6300	8
54-1	ROCKER ARM MA	16956 - 05 - 5110	8
54	ROCKER ARM - ASSY	TN030 - 13215	8
53	TIMING WHEEL	TN030 - 13007	1
52-2	PIN CAM SHAFT	K99225 - 0510	1
52-1	CAM SHAFT - MACHINED	TN030 - 13006	1
52	CAM SHAFT ASSY	TN030 - 13005	1
51	OIL - SEAL	KKY01 - 12 - 602	1
50	PULLEY - CAM SHAFT ASSY	OK201 - 12 - 425	1
49	BOLT CAM PULLEY	K99784 - 1020	1
48-6	BOLT CAM BEARING FRAME	TN030 - 11054	10
48-5	BOLT CAM BEARING FRAME	K99794 - 0630	10
48-4	PIN - CAM BEARING FRAME	K 99233 - 0814	2
48-3	CAP SEAL	K 99306 - 3000	1
48-2	CAM BEARING FRAME - PREMACHINED	TN030 - 11047	1
48-1-4	GUIDE - VALVE	TN030 - 11044	8
48-1-3	INSERT EXHAUST VALVE SEAT PREMACHINED	TN030 - 11043	4
48-1-2	INSERT INLET VALVE SEAT PREMACHINED	TN030 - 11042	4
48-1-1	CYLINDER HEAD PREMACHINED	TN030 - 11049	1
48-1	CYLINDER HEAD - SUB - ASSEMBLY	TN030 - 11046	1
48	CYLINDER HEAD - FINAL MACHINED	TN030 - 11041	1
47	PLATE GASSET.F	TN030 - 14042	1
46	BOLT (Bracket CCC-Block_3, Hanging Bracket.F_1, Strap-Alternator_1)	K99794 - 1020	5
45	GASKET INLET . W . PUMP	KKY01 - 15 - 165	1
44-2-2	O . RING	KKY01 - 15 - 287	1
44-2-1	PIPE BY PASS ASSY	TN030 - 21615	1
44-2	PIPE BY PASS COMPT	TN030 - 21625	1
44-1	INLET PIPE WATER	TN030 - 21635	1
44	INLET ASSY - W . PUMP	TN030 - 21610	1
43	BOLT ALTERNA . ADJUST	K90794 - 0825	1
42	STRAP - ALT	KKY01 - 18 - 361	1
41	ALTERNATOR	TN303 - 18300	1
40	BOLT ALTERNATOR	K99796 - 1095	1
39	WIRE ALT. BRACKET	KBF67 - 67 - 996A	1
38	BOLT - E/G	K99756 - 1230	3
37-2	STUD	MB180 - 39 - 032	3
37-1	BRACKET	MDX01 - 39 - 031	1
37	BRACKET - E / G NO.3	MDX01 - 39 - 030	1
36	NUT FLANGE - BRACKET HYDROLIC PUMP	K99970 - 1000	1

No	Name	Part No	QTY
35	STUD - BRACKET HYDROLIC PUMP	OK30A - 39033	1
34	BOLT - BRACKET HYDROLIC PUMP	KDX50 - 32961	2
33	BRACKET. OIL PUMP H/S	DN030 - 49113	1
32	BOLT (Water Pump_4, Inlet Tube & Water pump_2, Thermostat Cover_2, R.Hanging BrKT_1)	K99794 - 0825	9
31-6-3	SUPPORT PLATE	KKY01 - 15 - 111 / 1	1
31-6-2	IMPELLER	KKY01 - 15 - 111 / 2	1
31-6-1	BUSH	KKY01 - 15 - 111 / 3	1
31-6	IMPELLER - W . PUMP	KKY01 - 15 - 111	1
31-5	SEAL	KK150 - 15 - 120	1
31-4	HOUSING W . PUMP BRG	MB630 - 15 - 101C	1
31-3	WATER BAFFLE PLATE	MF801 - 15 - 125A	1
31-2	SHAFT BEARING	KK150 - 15 - 112	1
31-1	BOSS - WATER PUMP PULLY	MB301 -15 - 117	1
31	PUMP - COMPT - WATER	KKY01- 15 - 010D	1
30	GASKET - W . PUMP	KKY01 - 15 - 116A	1
29-4	PLUG	KHE03 - 10 - 404	1
29-3	GASKET	K99564 -1400	1
29-2	SEAT - DRAIN PLUG	MPN11 - 10 - 403	1
29-1	OIL PAN	MB3H7 - 10 - 401A	1
29	OIL PAN ASSY	KKY01 - 10 - 400A	1
28	GASKET OIL PAN - RE	MB6F4 - 10 - 428	1
27	GASKET OIL PAN - FR	MB6F4 - 10 - 427	1
26	BOLT REAR COVER	K99796 - 0620	2
25	BOLT (Rear Cover_2, Oil Pan_18, Side stay manifold_2, Bracket Intake Manifold_2, TDC sensor_1)	K99794 - 0616	25
24-3	TUBULAR PIN	K99234 - 0908	2
24-2	OIL - SEAL	KKY01 - 11 - 312	1
24-1	COVER - REAR	MB366 - 11 - 311B	1
24	REAR COVER ASSY	KK151 - 11 - 310	1
23	OIL FILTER	KK120 - 14 - 302	1
22	Bolt (Oil Strainer_2, Timing Wheel & Cam Shaft_1)	K99794 - 0620	3
21	STRAINER ASSY OIL	KKY01 - 14 - 240A	1
20	GASKET OIL STRAINER	KKY01 -14 - 171	1
19	BOLT (Oil Pump_1, BrKT Ignition Coil_3)	K99794 - 0820	4
18	BOLT (Oil Pump_1, Bracket CCC - Belt_1)	K99794 - 0850	2
17	BOLT OIL PUMP	08070 - 8301A	3
16-13	COVER OIL PUMP	TN030 - 15012	1
16-12	ROTOR - O P OUT	TN030 - 15014	1
16-11	ROTOR - O P IN	TN030 - 15013	1
16-10	PLUG OIL PUMP	KKY01 - 14 - 239	1
16-9	SCREW	KFE1H - 14 -124	7
16-8	TUBULAR PIN	K99234 - 1208	2
16-7	OIL PUMP PIN	MB630 - 12 - 712	1

No	Name	Part No	QTY
16-6	SPLIT PIN	K99221 - 3035	1
16-5	SHEEL SPRING	M0222 - 14 - 118	1
16-4	SPR PRESS CONT	KO324 - 14 - 116B	1
16-3	PISTON PRESSURE CONT	KKY01 - 14 - 115	1
16-2	SEAL OIL	OB3C7 - 10 - 602A	1
16-1	BODY OIL PUMP	TN030 - 15011	1
16	OIL PUMP ASSY	TN030 - 15010	1
15	GASKET OIL PUMP	KKY01 - 14 - 113	1
14	METAL - THRUST	OK203 - 11 - 391	2
13	METAL - C.SHAFT, LWR	OK203 - 11 - 361	5
12	METAL - C.SHAFT,UPR	OK203 - 11 - 351	5
11	METAL CONN . ROD	OK203 -11 - 225	8
10-3	RING SET OIL	TN030 - 12018	4
10-2	RING PISTON 2ND	TN030 - 12017	4
10-1	RING PISTON TOP	TN030 - 12016	4
10	RING ASSY	TN030 - 12020	4
9-2	PISTON PIN	TN030 - 12012	4
9-1	PISTON - MACHINED	TN030 - 12011	4
9	PISTON ASSEMBLY	TN030 - 12010	4
8-4	BOLT - CONN	ME356 - 11 - 214A	8
8-3	NUT CONN.ROD CAP	KKY01 - 11 - 215	8
8-2	CAP- CONNECTING - ROD	M8034 - 11 – 212A	4
8-1	ROD CONNECTING	TN030 - 12111	4
8	CONNECTING ROD ASSEMBLY	TN030 - 12110	4
7	KEY - CRANK SHAFT	OK201 - 11 - 317	1
6-3	PIN CRANK SHAFT	M13NI - 11 - 302	1
6-2	STELL BALL	K99611 - 2000	4
6-1	CRANK SHAFT	M13NI - 11 - 301B	1
6	CRANK SHAFT ASSY	M13NI -11 - 300	1
5	PIN TUBULAR	K99234 - 1916	2
4	PIN TUBULAR CYL . HEAD	MB630 - 10 - 306	2
3	PLUG OIL CONTROL	MB630 -10 - 305	1
2	JOINT OIL FILTER	KB630 - 10 - 319	1
1-3	CAP SEAL	K99306 - 3500	3
1-2	CAP SEAL	K99306 - 3000	6
1-1-5	BOLT OF CAP CRANK	MB630 - 10 - 352	10
1-1-4	BLIND PLUG	M0221 - 10 - 327	2
1-1-3	CAP BRG 4	MB630 - 10 - 371	1
1-1-2	CAP-C. SHAFT BRG.1,2,3,5	MB630 - 10 - 351	4
1-1-1	PRE MACHINED CYLINDER BLOCK	TN030 - 11017	1
1-1	MACHINED CYLINDER BLOCK	TN030 - 11016	1
1	BLOCK CYLINDER ASSY	TN030 - 11015	1

Details	Date	Name			
			Project: TIBA Engine	QTY: 1	
Drawn	07/05/02	V.Habibi	Standard: ----------	Finishing: ------	
Checked	07/05/02	V.Habibi	Unit: mm	Thickness: ------	
Checked	07/05/02	M.Elyasi	Material: Assembly	Scale: Free	Sheets: 01
Approved	07/05/02	N.Mosleh		Size: Free	Sheet: 1
Weight: -------			Part Name: Part Break Down of S81 Engine		
Free Tol: -------			Draw NO: ----------	Revision: 01 R8.8.2	MEGA MOTOR R & D Dept.
			Part No: ----------		